CI/SfB | | (4-) | Rf9 | |
December 2010



Cedral Weatherboard and Operal

MARLEY Eternit



Cedral Weatherboard, Mulberry Lodge, Isle of Wight Front cover: Cedral Weatherboard, Beaulieu Park

A+

Marley Eternit's fibre cement cladding **can achieve an A+ rating** as defined in the BRE Green Guide to Specification*

Marley Eternit

Marley Eternit is committed to the cost effective and sustainable manufacture of high quality, high performing cladding systems.

Marley Eternit's range of cladding products are manufactured under quality management systems, which meet the requirements of ISO 9001 and environmental systems which comply with the internationally recognised ISO 14001 standard.

- Cedral Weatherboard
- Operal
- Natura
- Textura
- Pictura

Information for all these products is available on request. Visit www.marleyeternit.co.uk or call 01283 722588.



Operal, Aston Place, Benfleet

Cedral Weatherboard

Ideal low maintenance, rot free alternative to traditional timber weatherboarding. With the visual appeal of natural timber, simplicity of installation and resistance to rot, Cedral Weatherboard is an attractive, low maintenance alternative to PVCu.

Cedral Weatherboard can be supplied in Natural finish for site painting, or in a range of 22 factory applied solid colours and 4 woodstains.

Our comprehensive colour range provides an aesthetic option to suit many project requirements.

Advantages

- Excellent aesthetics
- Resistant to rot, immune to attack by pests and insects
- Stands up to the harshest weather conditions
- No routine maintenance required
- Easy to install
- Range of complementary aluminium trims available
- Use in the same way as wood
- Class 0 fire performance
- Ideal for use where traditional timber boards might be considered especially for facades and window and door surrounds
- Can achieve an A^+ rating in the BRE's Green Guide to Specification*
- BBA Certificate No. 06/4299

* Based on generic rating for autoclaved fibre cement (calcium silicate) cladding (Element ref. 806220701, 806220675, 806220676).



Cedral Weatherboard, windmill conversion, Sheerness

Operal

This impact resistant, durable and flat cladding is ideal across a range of applications from a residential soffit to a rainscreen cladding skin for a low rise commercial unit.

Operal is cost effective and easy to fix, and with the same range of colours, performance and maintenance levels as Cedral Weatherboard, is an ideal cladding partner.

Advantages

- Lightweight and easy to fix
- Easy to work on site
- Class 0 fire performance
- No routine maintenance required
- Can achieve an A^+ rating in the BRE's Green Guide to Specification*
- BBA Certificate No. 06/4355
- Applications – soffits and fascias, balcony panels, infill panels, dormer cheeks, general cladding

* Based on generic rating for autoclaved fibre cement single sheet (Element ref. 80623042, 806230422, 806230447, 806230450).

Contents

Introduction	2-3
Cedral Weatherboard product data and colour range	4-5
Operal product data and colour range	6-7
Cedral Weatherboard general fixing information	8-9
Cedral Weatherboard installation	10-14
Operal general fixing information	15
Operal installation	16-17
Finishes, maintenance and handling	18
Applications	19

EMS 56790

Cedral Weatherboard
Product data and colour range



Cedral Weatherboard, East Beech Road, Selsey



Cedral Weatherboard, The Hamptons, Surrey

Availability

Colours marked ‘standard’ are the most popular and are either kept in stock or are usually available on short lead times.

Cedral Weatherboard is sold in pallet quantities of 144 planks.

Bespoke colours are subject to minimum order quantities of 576 planks and subject to extended lead times.

Aluminium trims

Supplied in colours to match and complement Cedral Weatherboard.

Standards

The technical properties of Cedral Weatherboard sheets are in accordance with the prescriptions of BS EN 12467: 2004, Category A, Class 2.

Manufacture

Cedral Weatherboard is an autoclaved fibre cement plank manufactured from a mixture of cement, organic fillers and water.

Touch up paint

Cedral Weatherboard touch up paint is available in 0.5 litre quantities.

Cedral Weatherboard Woodstain

Cut edges of Cedral Weatherboard woodstain must be sealed with Luko solution.

Dimensions

Length	3600mm
Width	190mm
Thickness	10mm
Weight/board	11.2kg

Properties (air dry)

Installed weight	19.3kg/m²	
Density	1300kg/m³	
Bending strength:	Longitudinal Transverse	23N/mm² 11N/mm²
Modulus of elasticity:	Longitudinal Transverse	7500N/mm² 5500N/mm²
Expansion from dry air to saturated	1.75mm/m	
Thermal conductivity	0.212W/mK	
Reaction to fire:	Building Regulations Class 0	
EN 13501-1	A2-s1-d0	

Cedral Weatherboard colour range



C00 Natural



C01 White
(Nearest RAL 9016: Traffic White)



C02 Beige
(Nearest RAL 1015: Light Ivory)



C03 Grey Brown
(Nearest RAL 1019: Grey Beige)



C04 Dark Brown
(Nearest RAL 8019: Grey Brown)



C05 Grey
(Nearest RAL 7047: Telegrey)

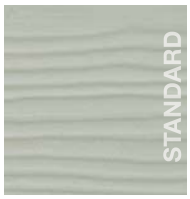

C06 Grey Green



C07 Cream White
(Nearest RAL 9001: Cream)



C08 Sand Yellow
(Nearest RAL 1014: Ivory)



C09 Ochre
(Nearest RAL 1000: Green Beige)



C10 Blue Grey
(Nearest RAL 7001: Silver Grey)



C11 Beige Yellow
(Nearest RAL 1001: Beige)



C12 Lavender Blue
(Nearest RAL 5014: Pigeon Blue)



C13 Lilac Blue



C14 Atlas Brown

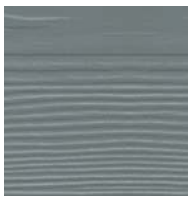

C15 Dark Grey
(Nearest RAL 7046: Telegrey)

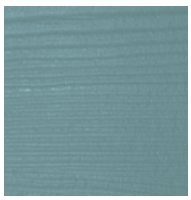

C16 Cevennes Green



C17 Oriental Green



C30 Brown
(Nearest RAL 8024: Beige Brown)



C31 Pine Green
(Nearest RAL 6009: Fir Green)



C32 Orange Brown
(Nearest RAL 8023: Orange Brown)



C33 Red
(Nearest RAL 3009: Oxide Red)



C50 Black
(Nearest RAL 9017: Traffic Black)

Woodstains*

Cedral Weatherboard is also available in a range of woodstain shades to simulate the colour and texture of a variety of timber stocks.



CL102 Pine



CL103 Ebony



CL104 Light Oak



CL105 Dark Oak

* Due to the transparent coating, it is not recommended to install Cedral Weatherboard woodstain colours vertically.

Please note: some colours do not have a near match RAL colour available.

Operal
Product data and colour range



Operal, custom screen print, Scotland



Operal, Aston Place, Benfleet

Availability

Colours marked ‘standard’ are the most popular and are either kept in stock or are usually available on short lead times.

All other colours are made to order and will be subject to longer lead times.

Standards

The technical properties of Operal sheets are in accordance with the prescriptions of BS EN 12467: 2004, Category A, Class 3.

Manufacture

Operal is an autoclaved fibre cement sheet manufactured from a mixture of cement, organic fibres, fillers and water.

Touch up paint

Touch up paint is available in 0.5 litre quantities.

Dimensions

Sheet sizes	3050 x 1220mm (standard) 2500 x 1220mm
Nominal thickness	9mm
Nominal weight	13.0kg/m²
Tolerance on thickness	±10%

Properties (air dry)

Density	1230kg/m³	
Bending strength:	Longitudinal Transverse	23N/mm² 17N/mm²
Modulus of elasticity:	Longitudinal Transverse	9500N/mm² 7500N/mm²
Hygroscopic movement	2.10mm/m	
Thermal conductivity	0.25W/mK	
Frost resistance	Fully frost resistant	
Reaction to fire:	Building Regulations Class 0	
EN 13501-1	A2-s1-d0	

Operal colour range

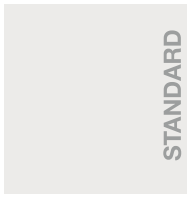

OP01 White
(Nearest RAL 9016: Traffic White)

OP02 Beige
(Nearest RAL 1015: Light Ivory)

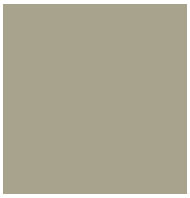

OP03 Grey Brown
(Nearest RAL 1019: Grey Beige)

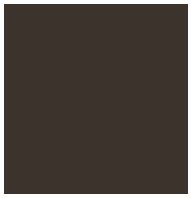

OP04 Dark Brown
(Nearest RAL 8019: Grey Brown)

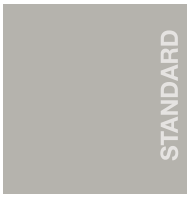

OP05 Grey
(Nearest RAL 7047: Telegrey)

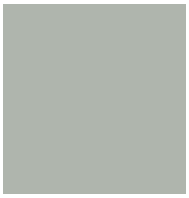

OP06 Grey Green



OP07 Cream White
(Nearest RAL 9001: Cream)

OP08 Sand Yellow
(Nearest RAL 1014: Ivory)

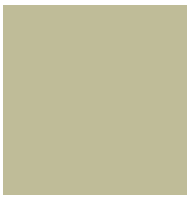

OP09 Ochre
(Nearest RAL 1000: Green Beige)



OP10 Blue Grey
(Nearest RAL 7001: Silver Grey)

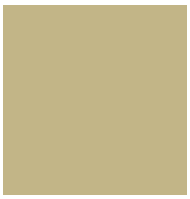

OP11 Beige Yellow
(Nearest RAL 1001: Beige)

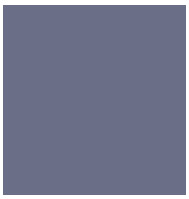

OP12 Lavender Blue
(Nearest RAL 5014: Pigeon Blue)

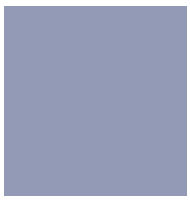

OP13 Lilac Blue



OP14 Atlas Brown



OP15 Dark Grey
(Nearest RAL 7046: Telegrey)

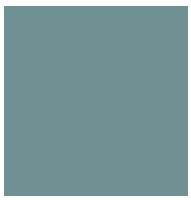

OP16 Cevennes Green



OP17 Oriental Green



OP30 Brown
(Nearest RAL 8024: Beige Brown)



OP31 Pine Green
(Nearest RAL 6009: Fir Green)



OP32 Orange Brown
(Nearest RAL 8023: Orange Brown)



OP33 Red
(Nearest RAL 3009: Oxide Red)



OP50 Black
(Nearest RAL 9017: Traffic Black)

Please note: some colours do not have a near match RAL colour available.

Cedral Weatherboard general fixing information

Cutting

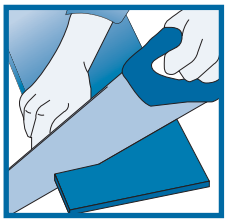

The method of cutting is dependent on the amount there is to be done. It is possible to cut the board with a handsaw, an electric jigsaw or a circular saw.

Note: Cutting and drilling must take place in a dry environment

Handsaw

This method requires a hardened point saw and is recommended for small amounts of cutting.

Guillotine

Cedral Weatherboard can be cut with a specially manufactured guillotine.

Hand held circular saw

Used with a tungsten tipped blade of 36 teeth on a 180mm-diameter blade is recommended for moderate amounts of cutting. Also with this method, cutting from the back of the board is advisable as the saw guide leaves marks across the board surface. A trial cut is suggested.

A diamond-dusted blade

Used in hand held circular saw gives the best results and is the recommended method of cutting large quantities. The grade of dust is 36-44 grit; these blades are available from local suppliers.

Screwing

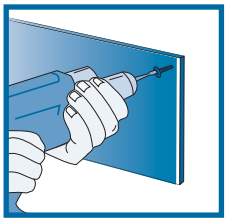

Screw fixing to the support structure can be achieved without pre-drilling where fixings are at least 50mm from the end of the board (screw gun required). Where screws are to be within 50mm of the end of the board then a pre-drilled hole and countersink is required to suit the screw size. Screws preferably stainless steel min. size 4.0 x 50mm.

The following minimum distances from the edge to the screw and nail must be respected.

Edge distance

D1	20mm
D2	20mm

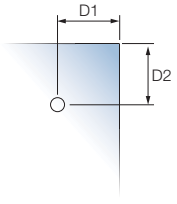

Nailing

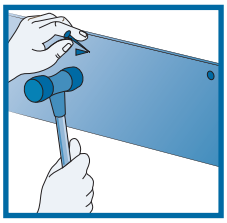

By hand

The board can be hand nailed without pre-drilling when the nails are at least 50mm from the end of the board. For nails closer than 50mm to the end, nail positions need pre-drilling with a 3mm drill. Normal HSS drill bits can be used but they will need regular sharpening. Nails should be stainless steel ring shank, minimum size 2.8 x 45mm with 7-10mm head.

Pneumatic nailing

Weatherboard can be pneumatically nailed. There is a large selection of guns on the market. Stainless steel fixing is preferable, as they last as long as the board. The nail length should be 50mm and be 2.8mm dia. A ring shank nail is preferred and has a full round head of 7mm dia. The type of gun nail which has a narrow head (The nail looks more like a “T” section) is not acceptable. Nails with a “C” shaped head are acceptable but should be minimum 7mm-dia head.

Trial nailing should be conducted to set the depth of the fixing, and how close to the edge of the board nails can be placed.

Any pneumatic gun, which is being considered, must be adjustable otherwise the nails could either be fired right through the board or left proud of the face of the board (check with manufacturer).

Scoring and breaking

Cedral Weatherboard can also be scored on both sides with a Stanley knife and then broken over a hard edge. This process is only used for edges which are butting up to corner profiles or brickwork. Not recommended for mitre corners as the break is not as clean as a saw cut.

Health and safety aspects

Dust can be released while the sheets are being processed which can irritate airways and eyes. It is recommended that a dust mask and safety goggles be worn. Appropriate dust extraction or proper ventilation is to be provided depending on the room in which the work is being carried out or the equipment being used. Long-term exposure to dust can be harmful to health.

→ More

For detailed fixing instructions, please refer to the Cedral Weatherboard application document, available from Marley Eternit’s Technical Advisory Service.

Cedral Weatherboard trims

A range of aluminium corner profiles are available in colours to match and complement Cedral Weatherboard. See page 5 for full range of colours.

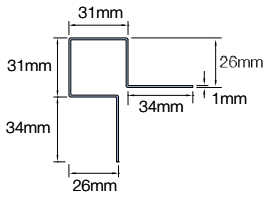

External corner (symmetric)
This symmetric external corner is used to provide protection on external corners and an aesthetically pleasing finish.

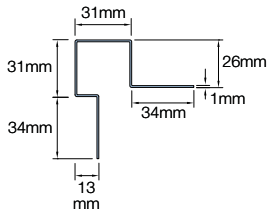

External corner/window reveal (asymmetric)
Can be used as an external corner or where detailing on a window reveal.

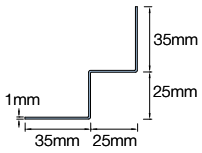

Internal corner
To finish the corner where Cedral Weatherboard meets on an internal corner forming a seal between the trim and the corner.

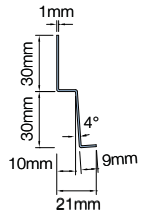

Start profile
Used to start a cladding run with a lip to cover the first batten.

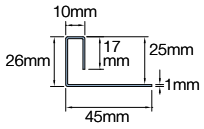

End profile
Hides any sharp corners and protects the Cedral Weatherboard edges from wear and tear giving an aesthetically pleasing finish.

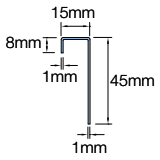

Connection profile
End trim to finish weatherboard when used as a single piece on a window reveal or soffit.

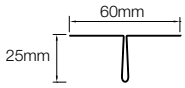

Joint profile vertical
Used as a jointing detail.

Accessories

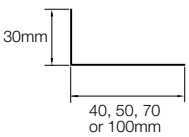

Perforated closure
Used to protect against pest infestation and debris.

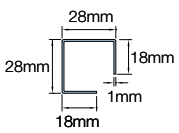

External corner junction
Used as a corner joining piece. Only available in black.

Cedral Weatherboard installation

Installing Cedral Weatherboard

Each plank must be fixed at least once to every support. The end of every plank must also coincide with a support. Where specified, install vapour barrier or breather membrane over the wall or framework behind the timber studs. Installation begins at the bottom of the facade, where a start profile is fixed first. This is overlapped by the first plank, which starts the layering of the planks. Allow at least 150mm between bottom edge of Weatherboard and the ground. Fixing is done through the upper edges. There is no side overlap, the strips being simply loose butted against one another, and the joint must coincide with a timber support.

A strip of black polyethylene soaker should be applied under the vertical joints to protect the batten.

For other applications; vertically, laid flat or ship lapped, please contact Marley Eternit's Technical Advisory Service

Battens for Cedral Weatherboard

Cedral Weatherboard needs to be fixed to vertical timber battens (preservative treated and planed on 2 sides) of at least 50mm wide spaced at a maximum of 600mm across the elevation. The Weatherboard should be fixed to at least three battens; if it is only fixed to two then the batten spacing should be reduced to 400mm.

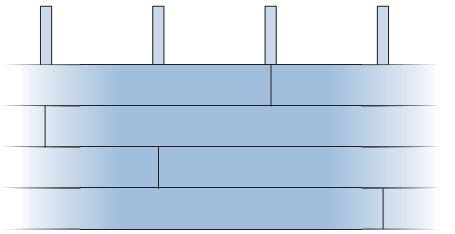

Joint detail

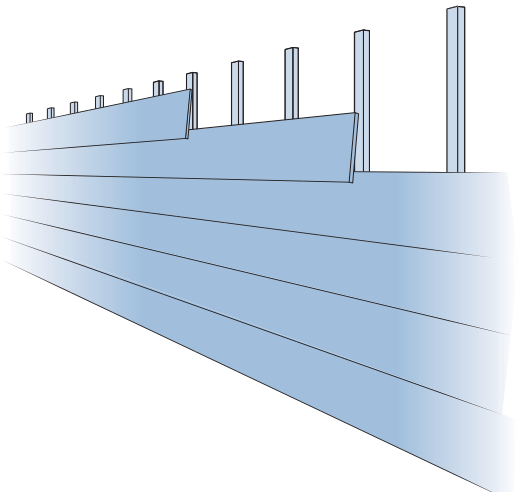

Mitred corner

To form the mitre the boards have to be cut 23mm longer on the bottom edge, 13mm longer on the top edge than the dimension to the corner of the support battens. This cut is also cut at an angle of 44° through the thickness of the board (suggest to mark board at 45° and under-cut). The above only works on a true 90° corner other degrees of corners will be by trial and error.

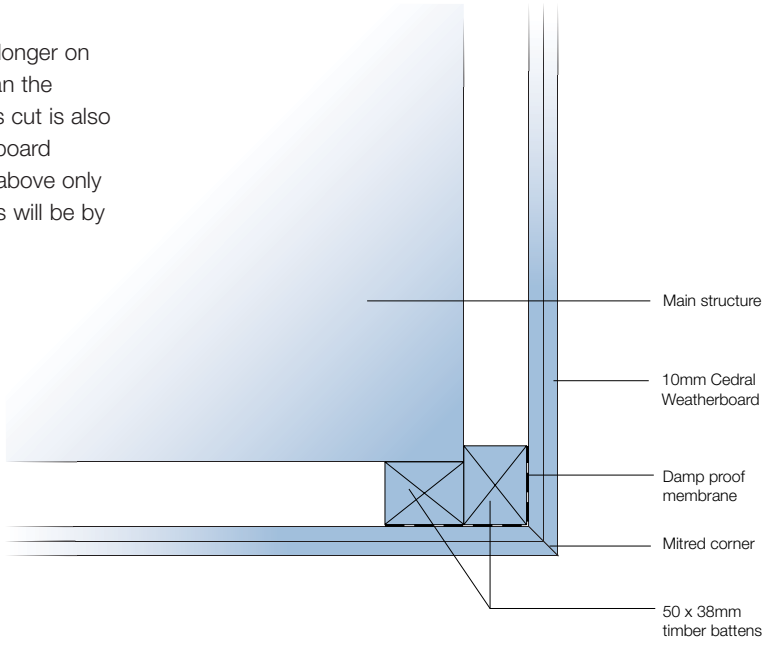

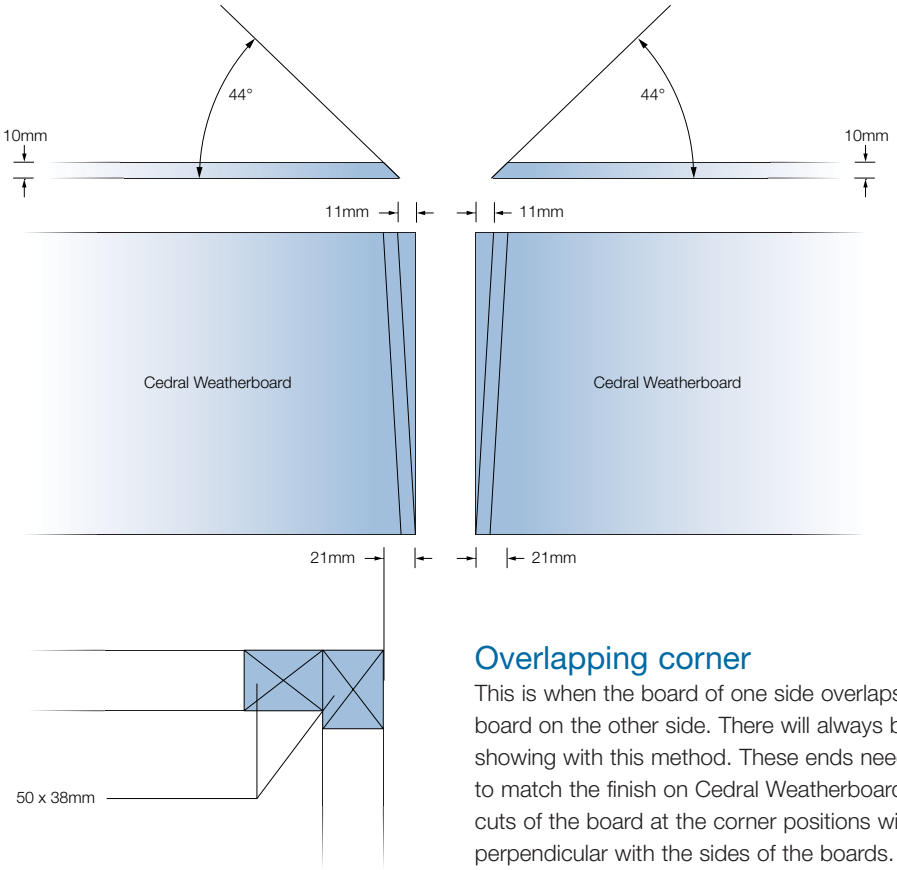

Overlapping corner

This is when the board of one side overlaps the end of the board on the other side. There will always be one end of board showing with this method. These ends need to be decorated to match the finish on Cedral Weatherboard. The transverse cuts of the board at the corner positions will not be perpendicular with the sides of the boards.

Base of cladding

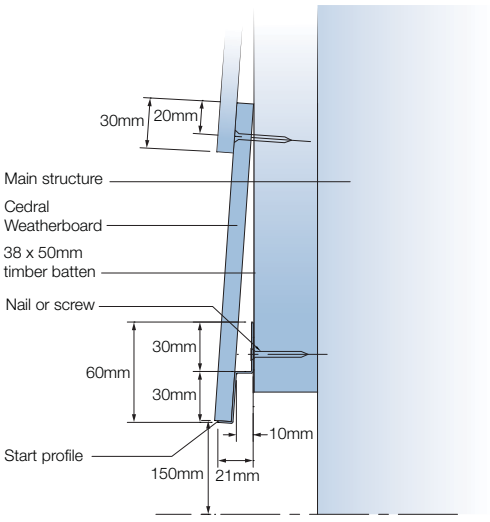

Plinth detail

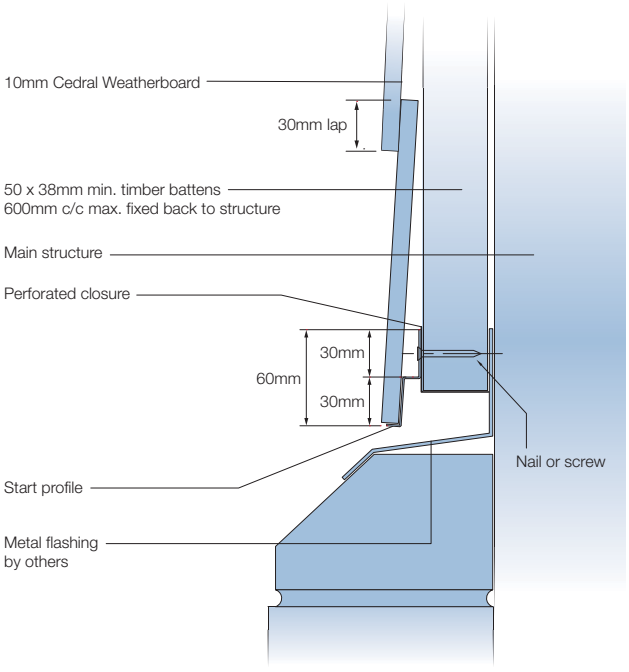

Cedral Weatherboard installation

Soffit detail

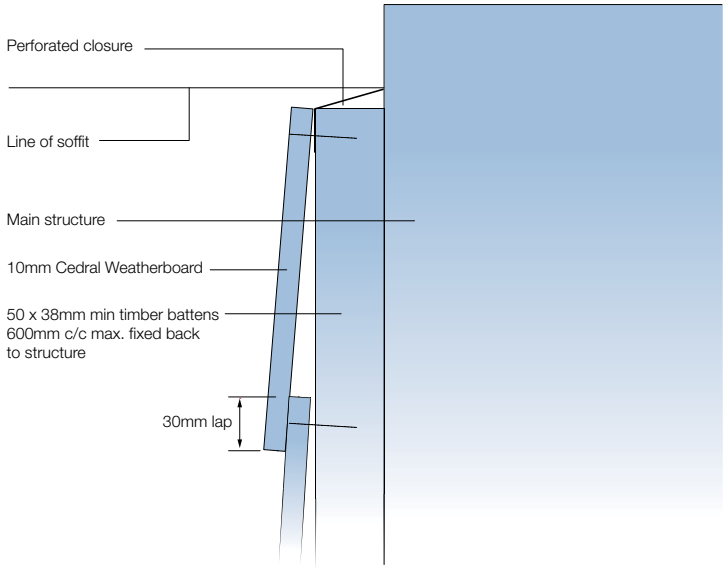

Sloping soffit detail

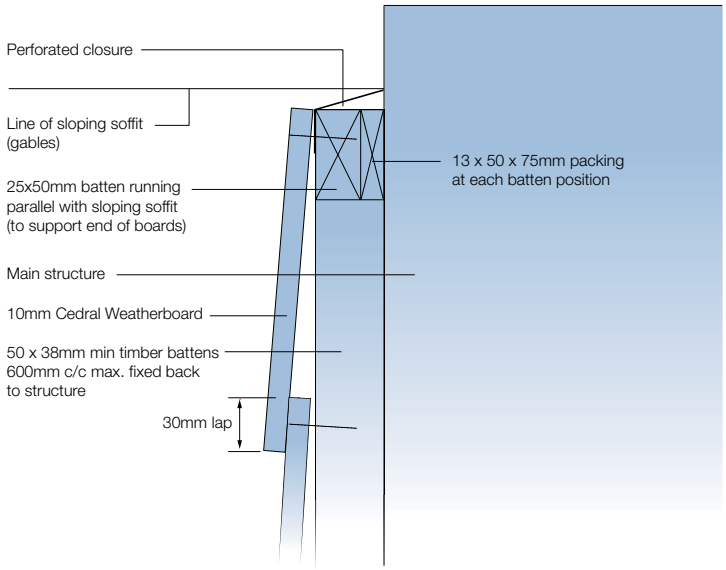

Corner/abutment with end profile

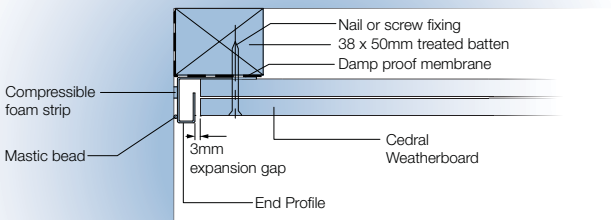

External corner detail

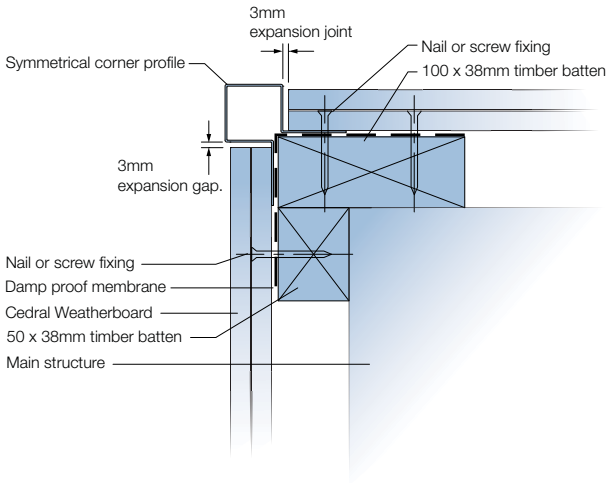

Symmetrical corner detail

Internal corner detail

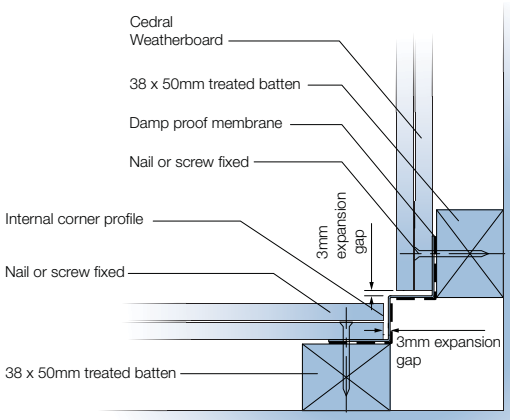

Cedral Weatherboard installation

Window reveal

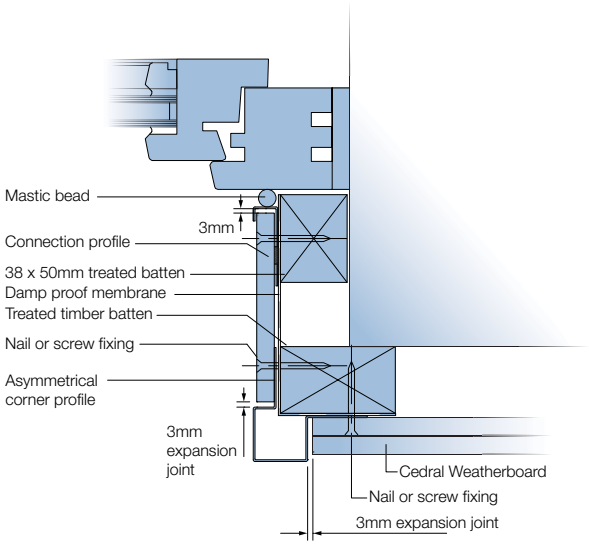

Window head details

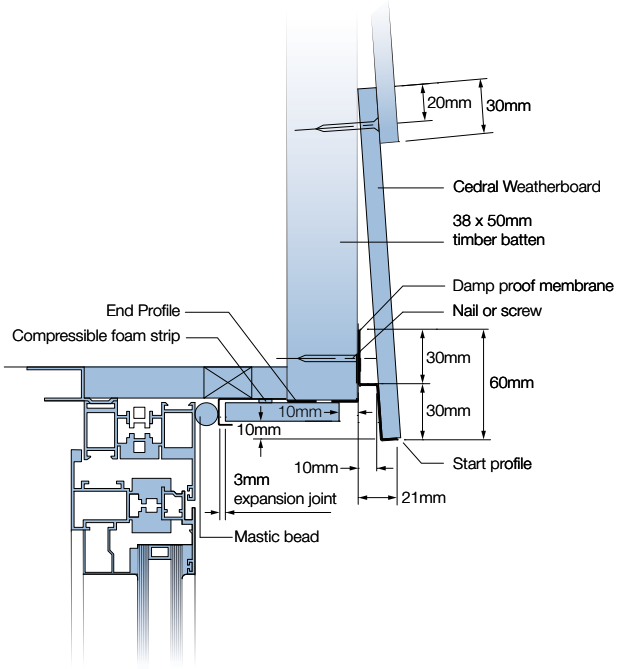

Operal general fixing information

Fixing overview

For facade applications, Operal can be nailed or screwed to vertical timber battens using the rainscreen construction principle.

For small applications (e.g. fascias, soffits) the board can be installed with 3mm joints, but where large boards are being used, alignment is easier if an 8mm joint is maintained.

Timber protection

Timber battens can be protected against decay and insect attack in accordance with BS 5268: Part 5.

Batten sizing

Screws

Panel joints min 100 x 38mm
Intermediate min 50 x 38mm

Larger battens are required if fixings are more than 25mm from the vertical edge.

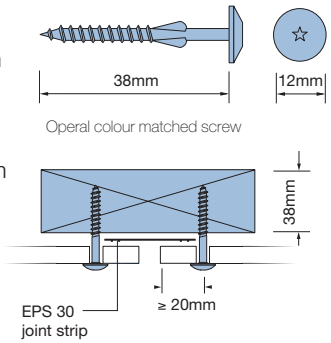

Horizontal joint alternatives

Horizontal joints may be formed using horizontal joint profiles Type HJP. Alternatively, an open joint detail may be used.

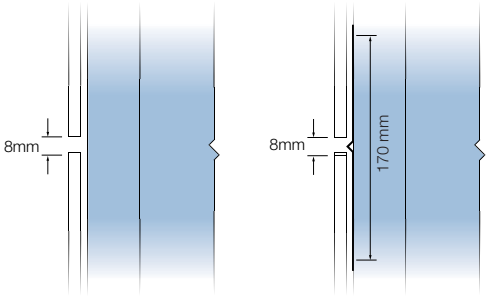

Horizontal open joint

Horizontal joint profile type HJP

Vertical joint and intermediate panel fixing

Marley Eternit supply black flexible jointing strips to protect and close vertical joints.

EFPS 36mm – standard panel joints
EFPS 60mm – corner joints

Note: To ensure an even surface, place an EFPS 36 strip behind intermediate panel fixing.

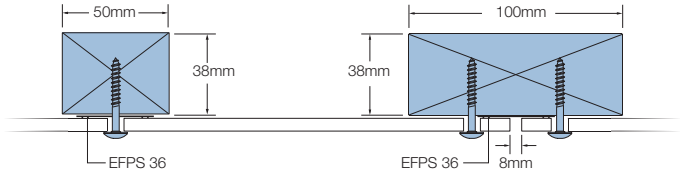

High wind loadings or exceptional impact requirements

Should wind loading exceed ± 1.5 kN/m², please consult the Technical Advisory Service. Where exceptional impact levels to cladding panels can be anticipated, i.e. low level applications near pedestrian access, schools, leisure facilities etc., additional timber battens, between the fixing batten, can be incorporated to increase the panel's resistance.

Surface mounted features

Where other building features, i.e. signs, gutters, canopies etc. are to be fixed then additional batten work should be included and clearance holes must be provided through the cladding. Under no circumstances should cladding panels receive any additional structural loads

Screw holes

The pre-drilled hole dimensions for the panels should be 5mm. However, the Operal screw will cut its own hole.

Fixing centres

Dimensions (mm)	screw fixing	nail fixing
A	20	20
B	50	50
C	600	600
D	600	400
Maximum distance between battens	600mm	
Minimum size of battens: at the vertical joint at the central support	 100 x 38mm 50 x 38mm	

Maximum centres for 1.5 kN/m² windload

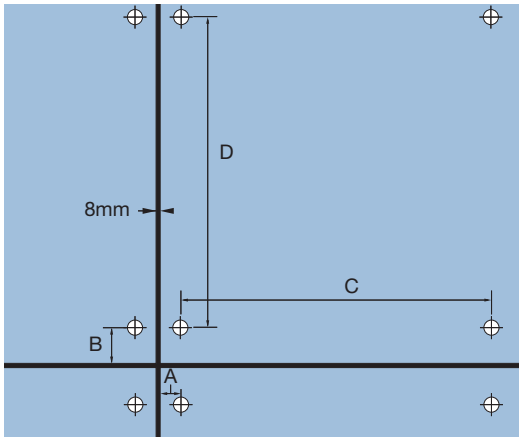

Operal installation

Corners

Corners are created using flat sheets and the appropriate jointing strips and corner profiles.

Universal corner profiles

These are supplied black or mill finished as standard. Dimension 10.5mm.

External corner

For good site practice it is necessary to vary the position of screw fixings to ensure that adequate penetration occurs. The example below illustrates a batten configuration employing 38mm deep battens and the respective screw positions

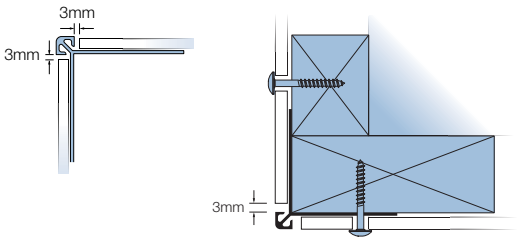

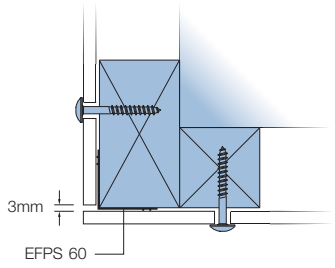

Open joint – external

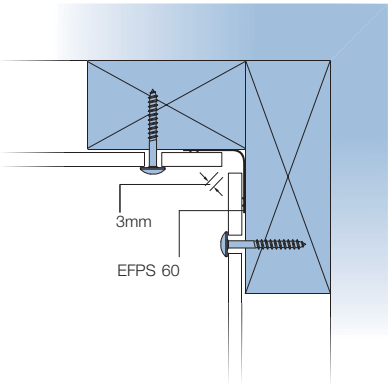

Open joint – internal

Brickwork abutment

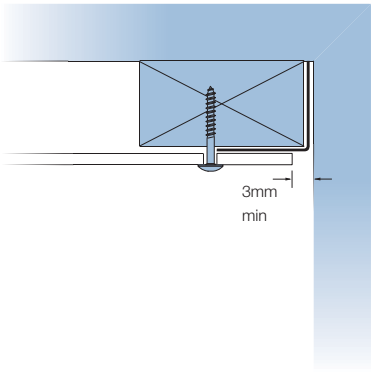

Base of cladding

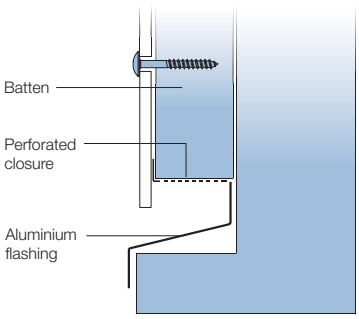

Top of cladding

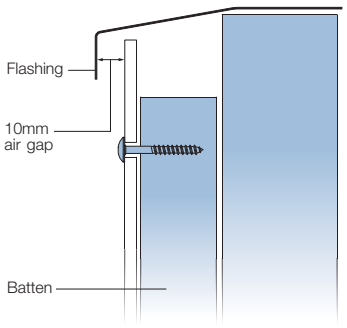

Jamb

For all jambs in excess of 100mm, additional fixings are required.

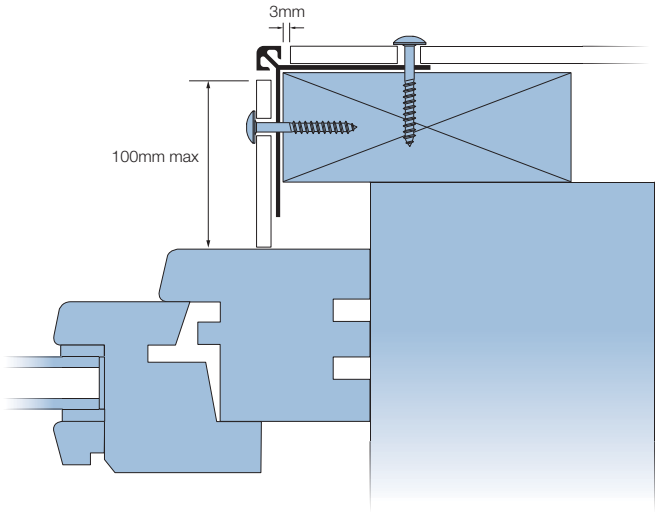

Typical window detail

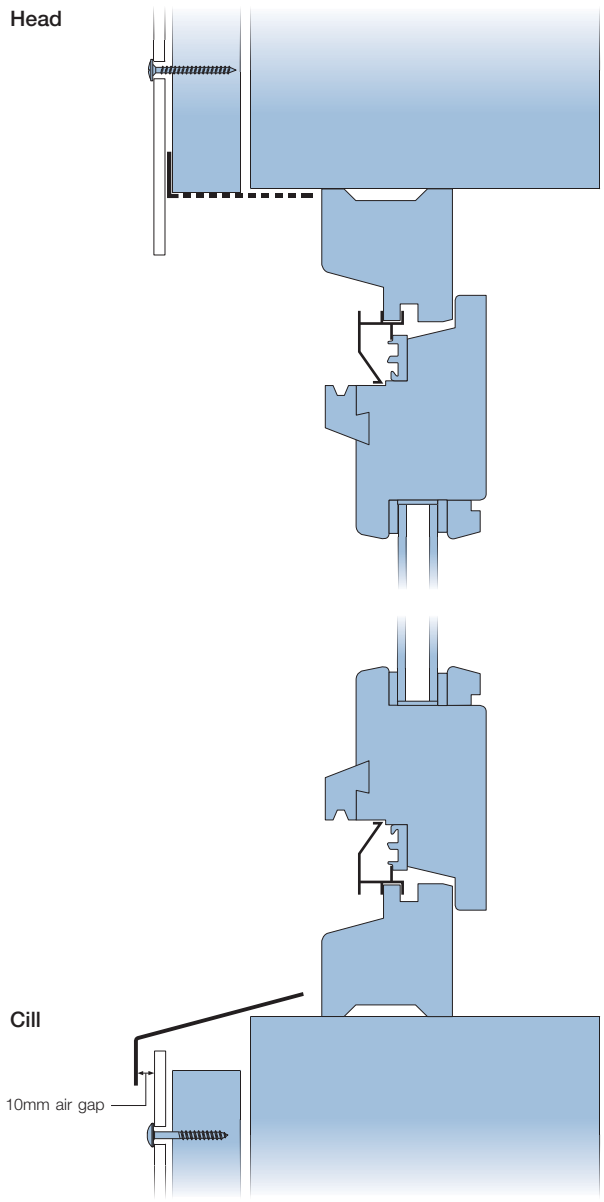

Finishes, maintenance and handling

Finishes

Cedral Weatherboard is available in 22 factory approved applied solid colours and 4 woodstain colours. The Natural Weatherboard is to be finished on site.

The Natural is self-coloured beige, with shading resulting from the natural properties of the constituents. Natural Weatherboard must be decorated or sealed with a clear water repellent sealer. It can be painted or stained to almost any colour, the restriction being on the paints and stains available. Solvent based paints and stains should not be used, as there is a reaction between the cement board and the stain. The recommended paint/stain is an acrylic water based product.

Cut edges of Cedral Weatherboard woodstain must be sealed with Luko solution. Vertical installation is not recommended for Cedral Weatherboard woodstain.

Maintenance

For minor soiling, washing with a mild household detergent or soft soap solution followed by rinsing with clear water is sufficient to maintain its appearance and colour.

The period to first repaint Cedral Weatherboard to maintain its appearance is approximately 10 years dependent upon location. Touch up paint is available in 0.5 litre quantities.

Storage and handling

Care should be taken at all times when handling Cedral Weatherboard on the flat as it can break. While Cedral Weatherboard is stored on the flat, it should be fully supported along its full length on purpose designed pallets. Manual handling is best carried out with the boards carried on their sides. When a single person is carrying a board, it should be turned on to its side before being lifted off the stack, and then the handler must keep their hands as far apart as possible to provide maximum support for the board.

Cedral Weatherboard should be stored on the pallets on which they are supplied and preferably inside. The temporary transportation hoods should be removed to release any trapped moisture and the pack recovered with an opaque tarpaulin.

The boards should be protected from mud staining.

Efflorescence

Efflorescence, or lime bloom, is an occasional phenomenon that affects all cement-based products. It is temporary and in no way detrimental to the performance of the product.

The duration of the efflorescence depends on the quality and type of deposit and on prevailing conditions. Water, the element that is initially responsible for its appearance, is also largely responsible for its disappearance. Rainwater, being slightly acidic, not only dissolves the deposit, but also mechanically removes it.

Although it is impossible to state exactly how long efflorescence will remain, a period of suitably bad weather is usually sufficient to restore the Weatherboard to an even appearance.

Applications



Operal, Aston Place, Benfleet



Cedral Weatherboard, Wansey Street, London



Cedral Weatherboard, Black Lion Street, Brighton



Cedral Weatherboard, Rowner Road, Hampshire



Cedral Weatherboard, Chatham, Kent



Cedral Weatherboard, Welwyn

MIX
Paper from responsible sources
FSC® C020704

This publication is based on the latest data available at the time of printing. Due to product changes, improvements and other factors, the Company reserves the right to change or withdraw information contained herein without prior notice. For specific applications users should refer to the Technical Advisory Service and relevant Standards and Codes of Practice for guidance.

The photography shown in the document should not necessarily be taken as recommendations of good practice. The printing process restricts the exact representation of colours. For true colour reference, please request product samples.

Services & support



Customer Services

Marley Eternit is committed to providing outstanding customer care and is staffed by experienced personnel in departments dedicated to providing the following services:

Advice, literature and samples

→ All current product and technical literature can be downloaded from www.marleyeternit.co.uk/downloads

To request samples and advice:

→ **T** 01283 722588 **E** info@marleyeternit.co.uk

Quotations and ordering information

→ **T** 01283 722588 **E** info@marleyeternit.co.uk

Stockist information

To find details for stockists of Marley Eternit products:

→ **T** 01283 722588 **E** info@marleyeternit.co.uk



Technical Advisory Service

Marley Eternit provides a free Technical Advisory Service which is staffed by personnel with specialist knowledge of the use of all Marley Eternit products and systems.

To request Technical Advice:

→ **T** 01283 722588
E info@marleyeternit.co.uk

Marley Eternit offer a comprehensive range of products, including:

- ✓ **Clay and concrete plain and interlocking tiles**
- ✓ **Fibre cement slates**
- ✓ **Interlocking slates**
- ✓ **Ventilation and dry fix accessories**
- ✓ **Decorative cladding**
- ✓ **Profiled sheeting**
- ✓ **High performing interior and exterior building boards**

Information for all these products is available on request.

→ www.marleyeternit.co.uk **T** 01283 722588

Customer Services
Tel 01283 722588 **Fax** 01283 722219 **E-mail** info@marleyeternit.co.uk
www.marleyeternit.co.uk

MARLEY Eternit

an Etex GROUP company

Marley Eternit Limited, Lichfield Road, Branston, Burton-on-Trent, DE14 3HD