A PROPOSED REPLACEMENT GARAGE WITH SELF CONTAINED ANNEX AT 39 ABBEY ROAD, SOMPTING, BN15 OAD

September 2024

Drawing no:JB 475/ Planning Application 04B

revision A 28 Oct 2024: annex revised to be single storey

revision B 06 Nov 2024: annex revised to not include a garage

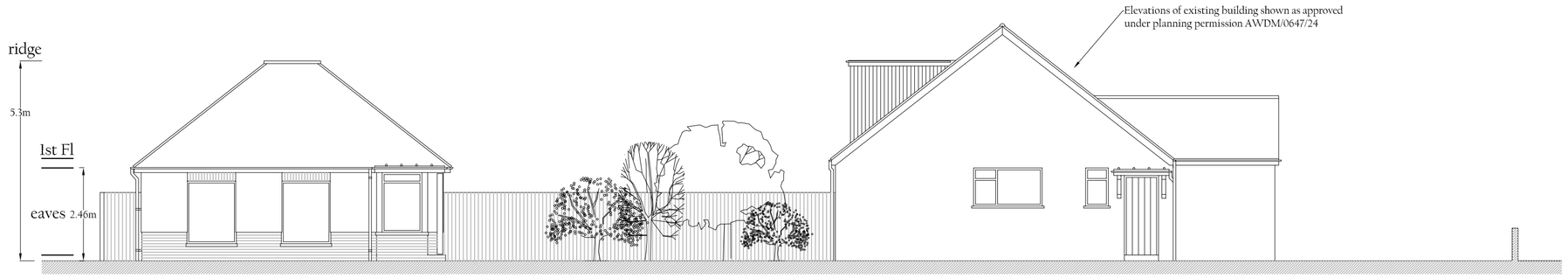

PROPOSED ELEVATION FACING ABBEY ROAD (FACING NORTH) 1:100

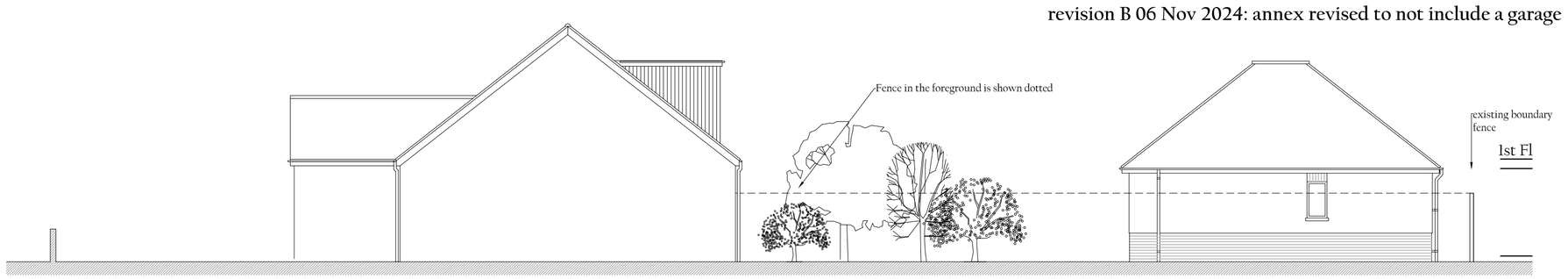

PROPOSED ELEVATION FACING SOUTH 1:100

Elevations of existing building shown as approved under planning permission AWDM/0647/24

Windows facing south have frosted glass



PROPOSED GROUND FLOOR AND SITE PLAN 1:100

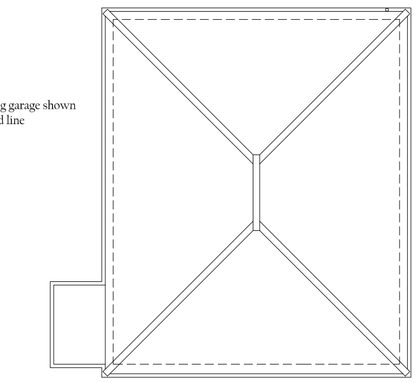

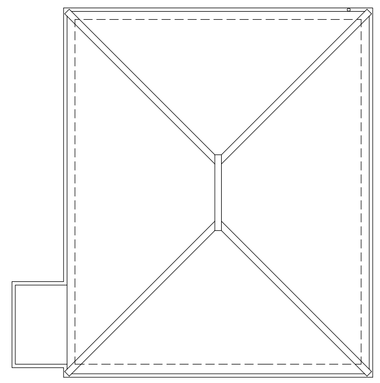

Proposed external materials:

Roof: Composite blue slate

Ground floor walls: Render painted white

First floor wall (within gable end): Render painted white

Windows: white UPVC frames

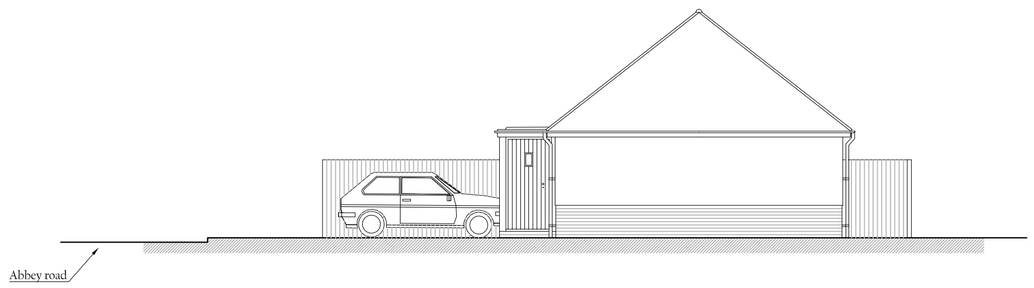

PROPOSED ELEVATION FACING WEST 1:100

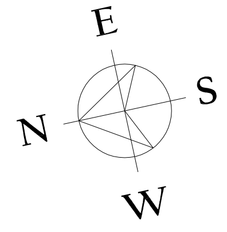

The total gross internal area of the annex is 44.4m.sq

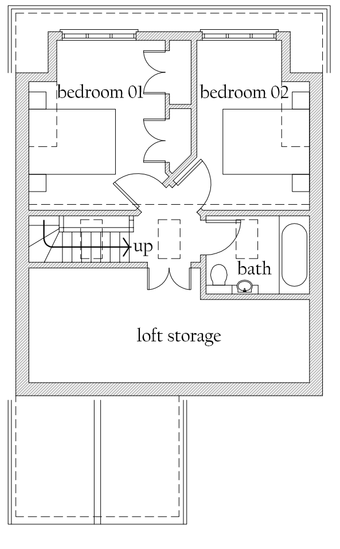

PROPOSED FIRST FLOOR PLAN 1:100

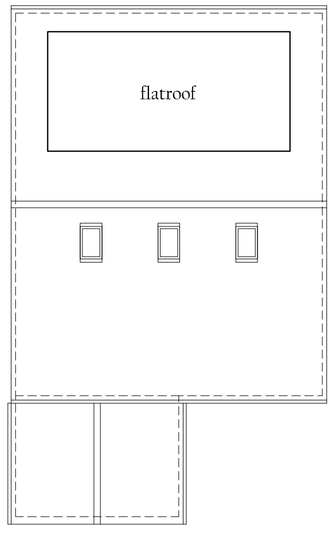

PROPOSED ROOF PLAN 1:100

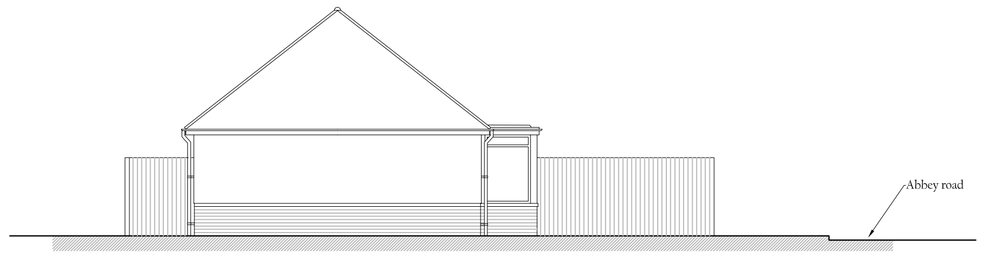

PROPOSED ELEVATION FACING EAST 1:100

0 1 2 3 4 5

SCALE BAR 1:100

JAMES BRECKELL : ARCHITECT : ARB : RIBA

89 Old Fort Road, Shoreham by Sea, BN43 5HA, Tel 07733 268 297, Email: james@breckell.co.uk