Roseview windows

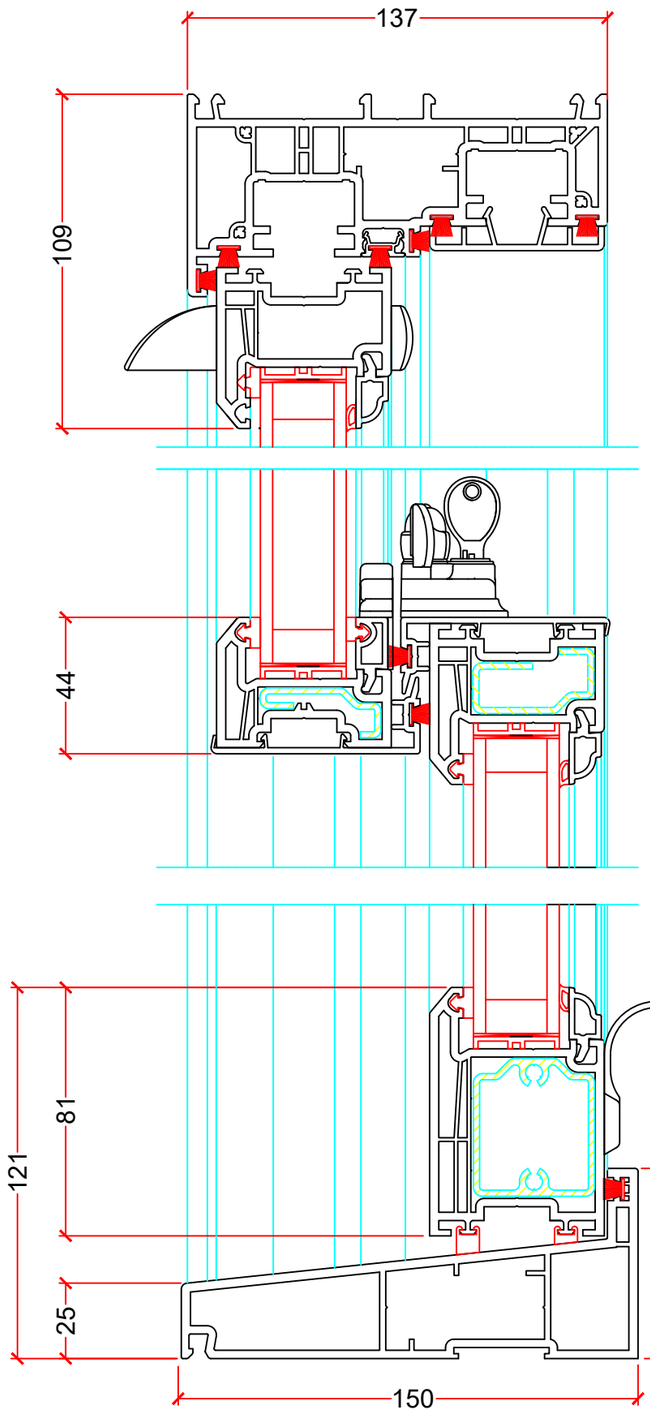

C-C Section Detail

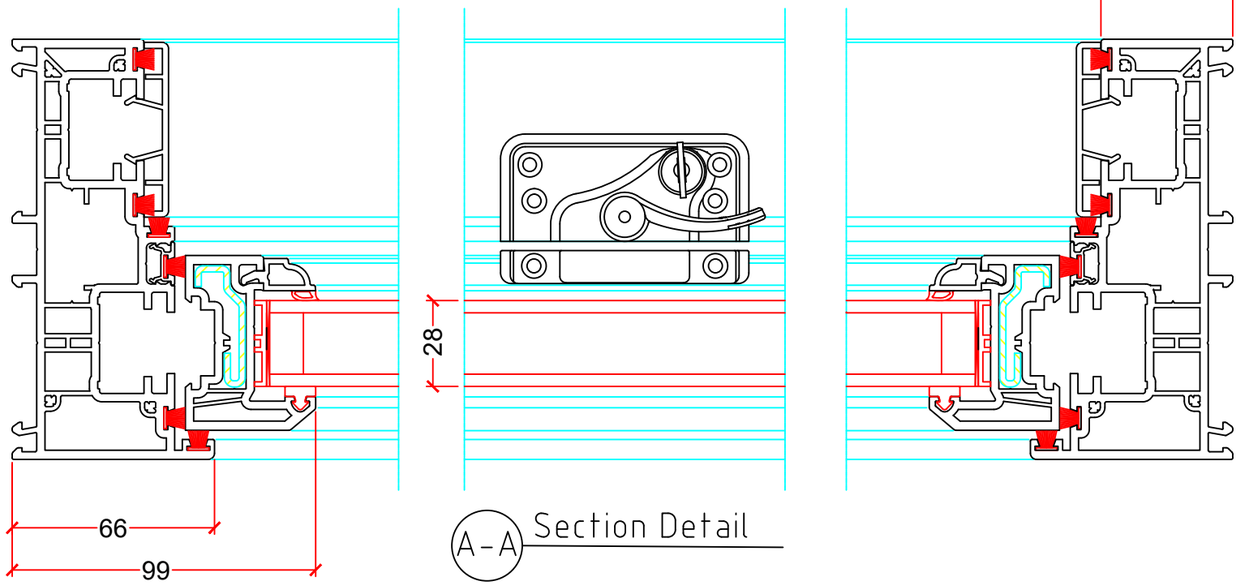

A-A Section Detail

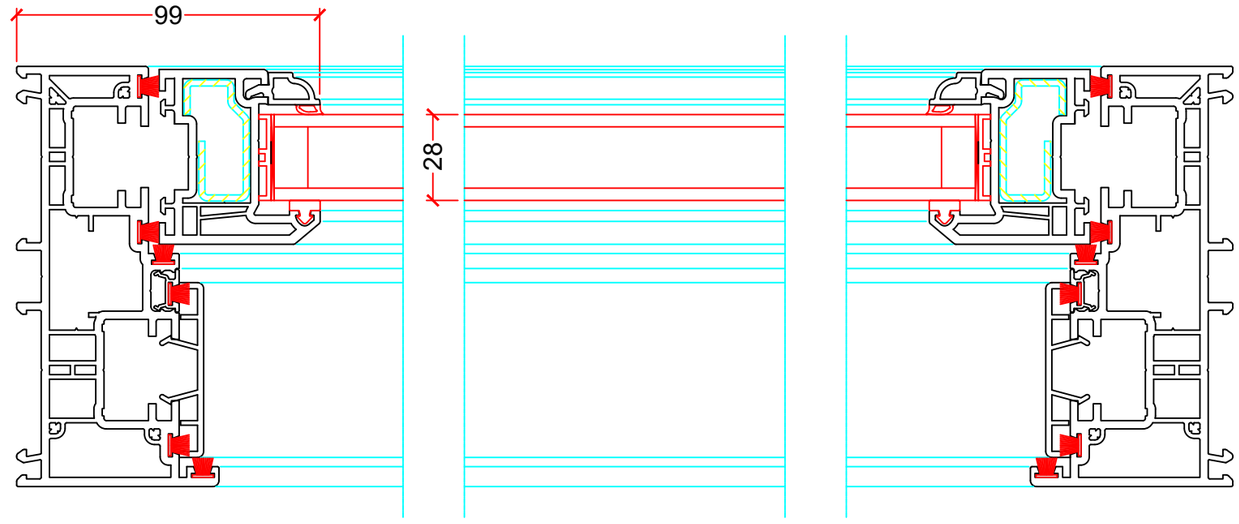

B-B Section Detail

Heritage rose

Quote Number 49881d Rev1 Roseview Heritage
© October 2024
Scale 1:2 @ A3

Scale 1:2 0 10 20 30 40 50 60 70 80 90 100

Roseview windows

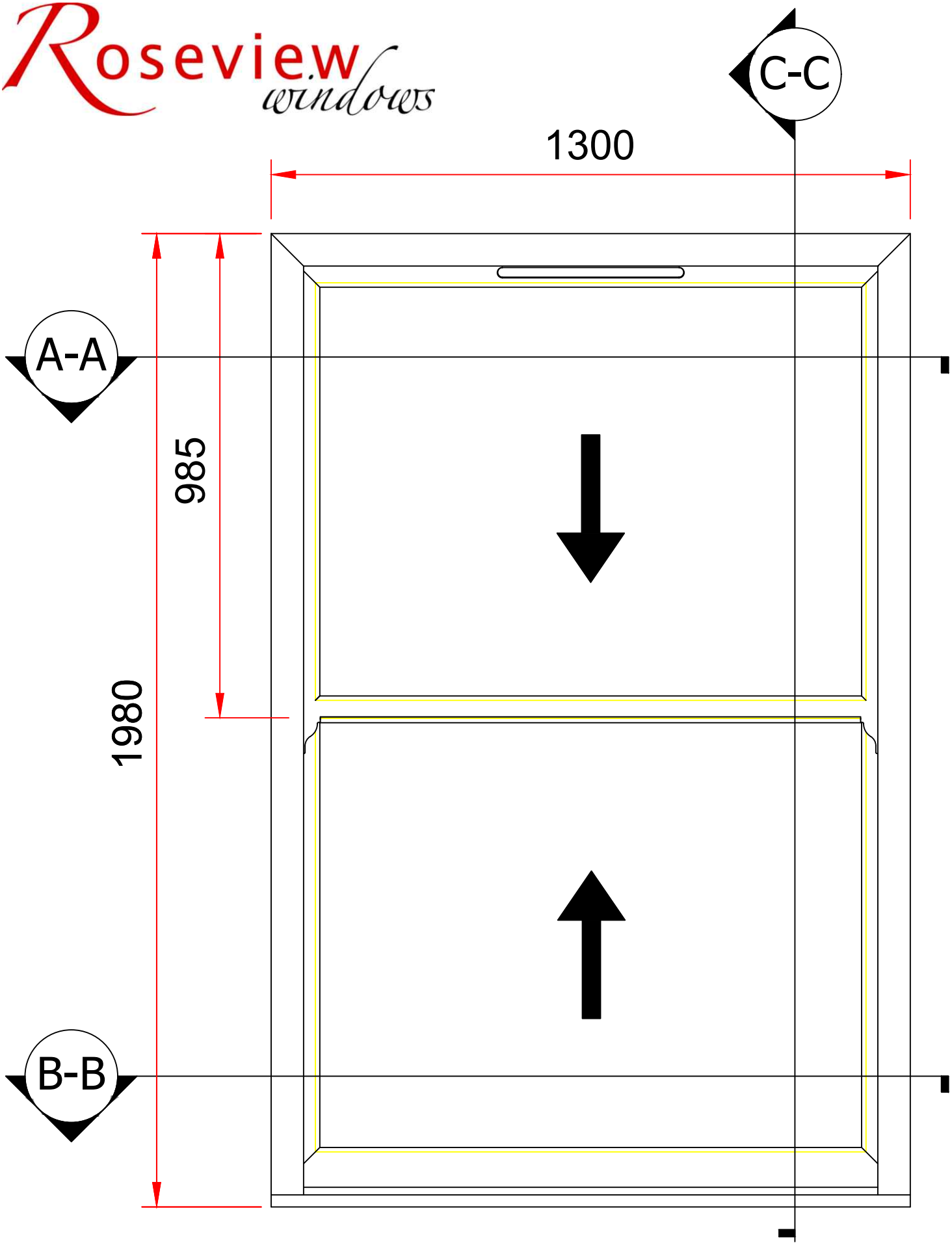

Frame No:1 Elevation

Heritage rose

Quote Number 49881d Rev1 Roseview Heritage
© October 2024
Scale 1:10 @ A4

Scale 1:10 0 100 200 300 400 500 600 700 800 900 1000

Roseview windows

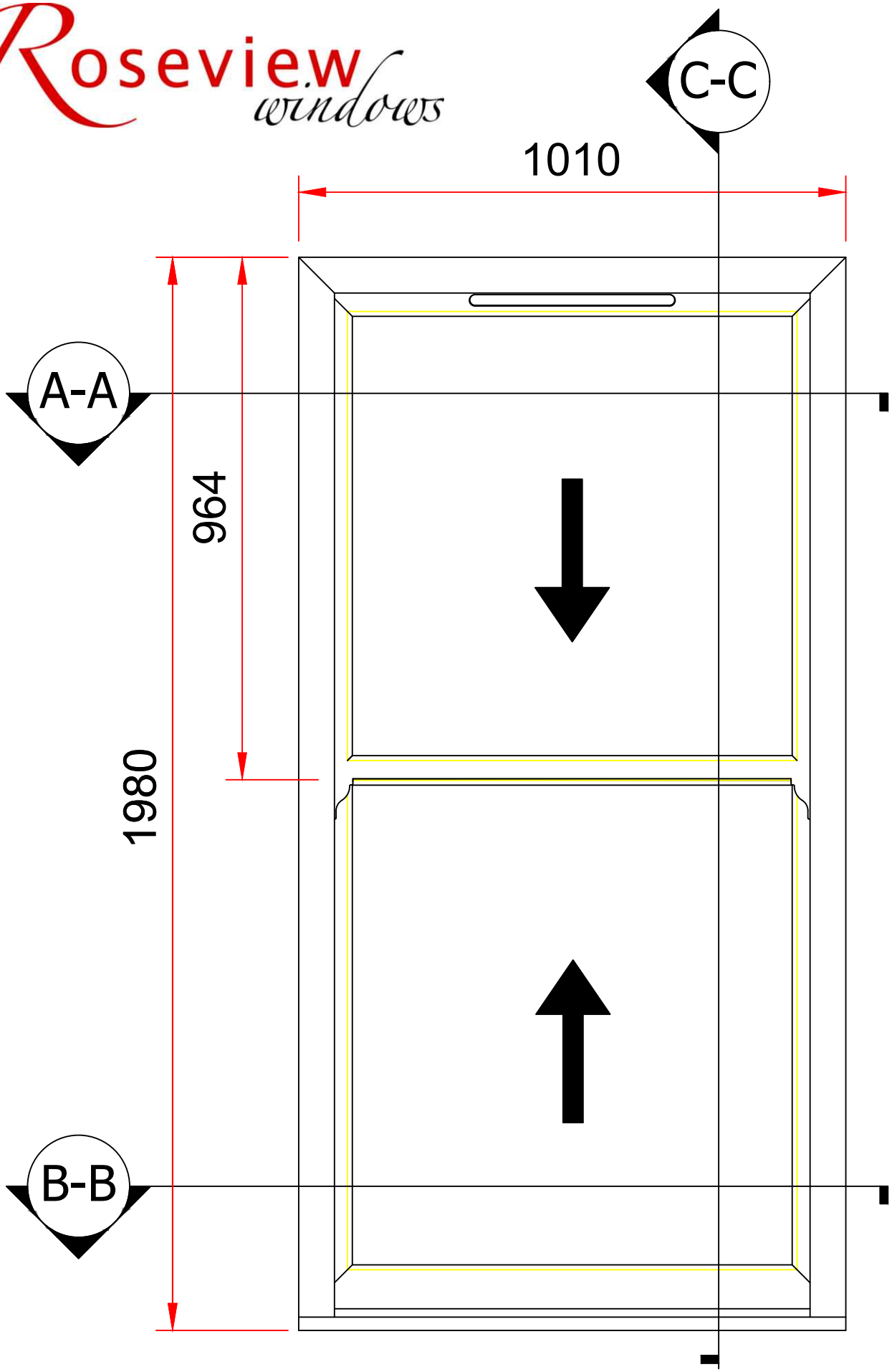

Frame No:2 Elevation

Heritage rose

Quote Number 49881d Rev1 Roseview Heritage
© October 2024
Scale 1:10 @ A4

Scale 1:10 0 100 200 300 400 500 600 700 800 900 1000

Roseview windows

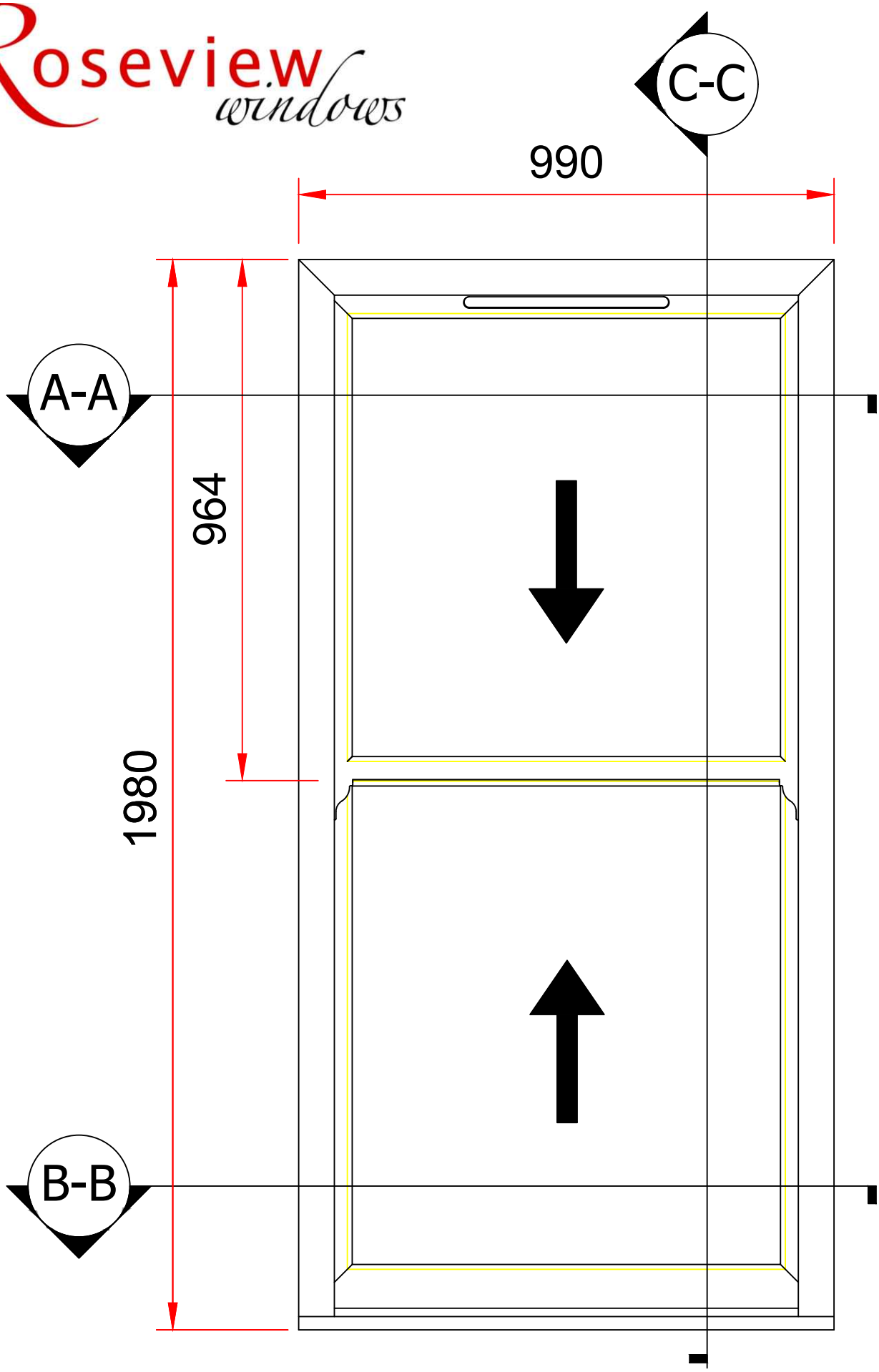

Frame No:3 Elevation

Heritage rose

Quote Number 49881d Rev1 Roseview Heritage

© October 2024

Scale 1:10 @ A4

Scale 1:10 0 100 200 300 400 500 600 700 800 900 1000

Roseview windows

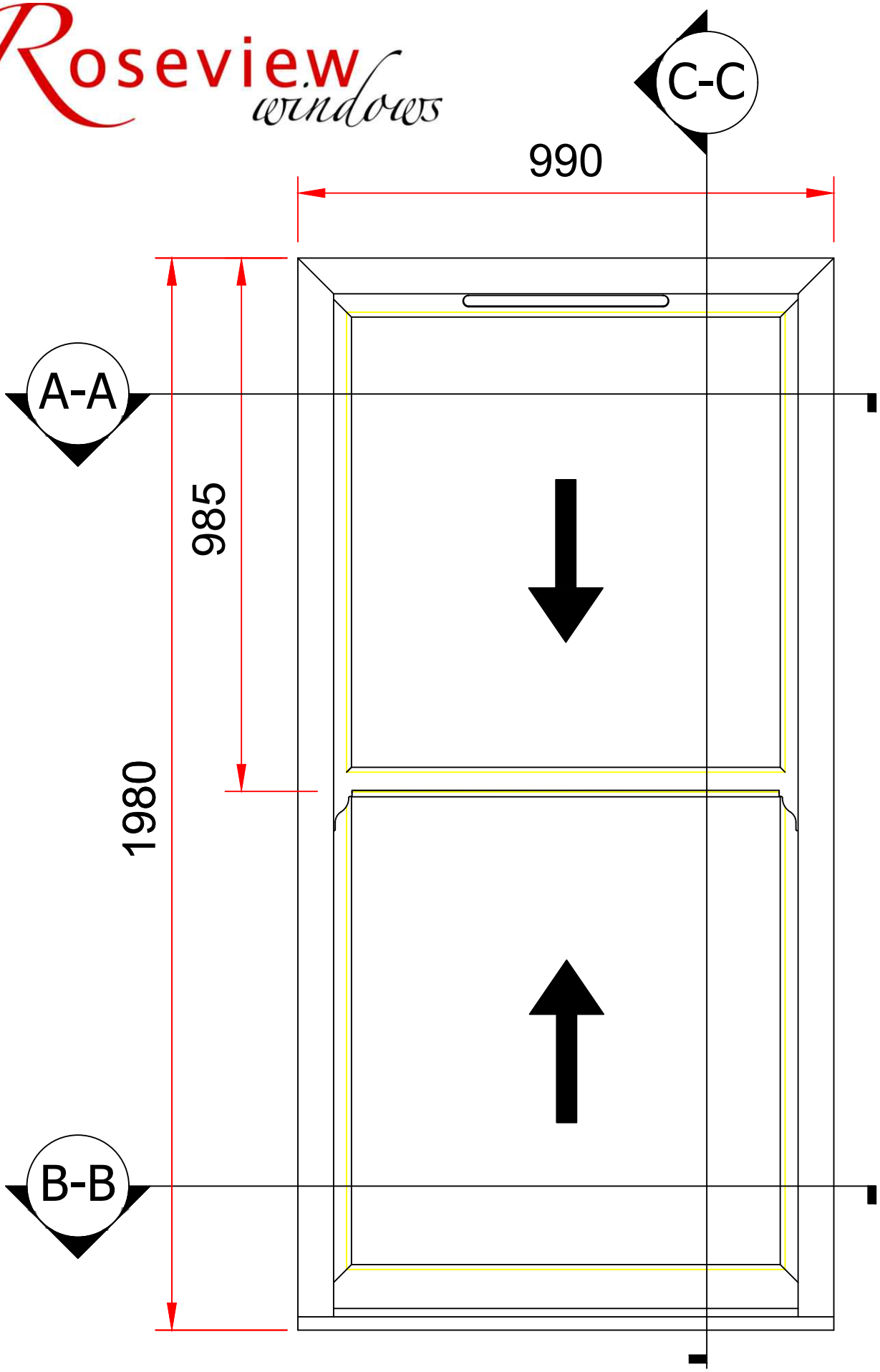

Frame No:4 Elevation

Heritage rose

Quote Number 49881d Rev1 Roseview Heritage

© October 2024

Scale 1:10 @ A4

Scale 1:10 0 100 200 300 400 500 600 700 800 900 1000

Roseview windows

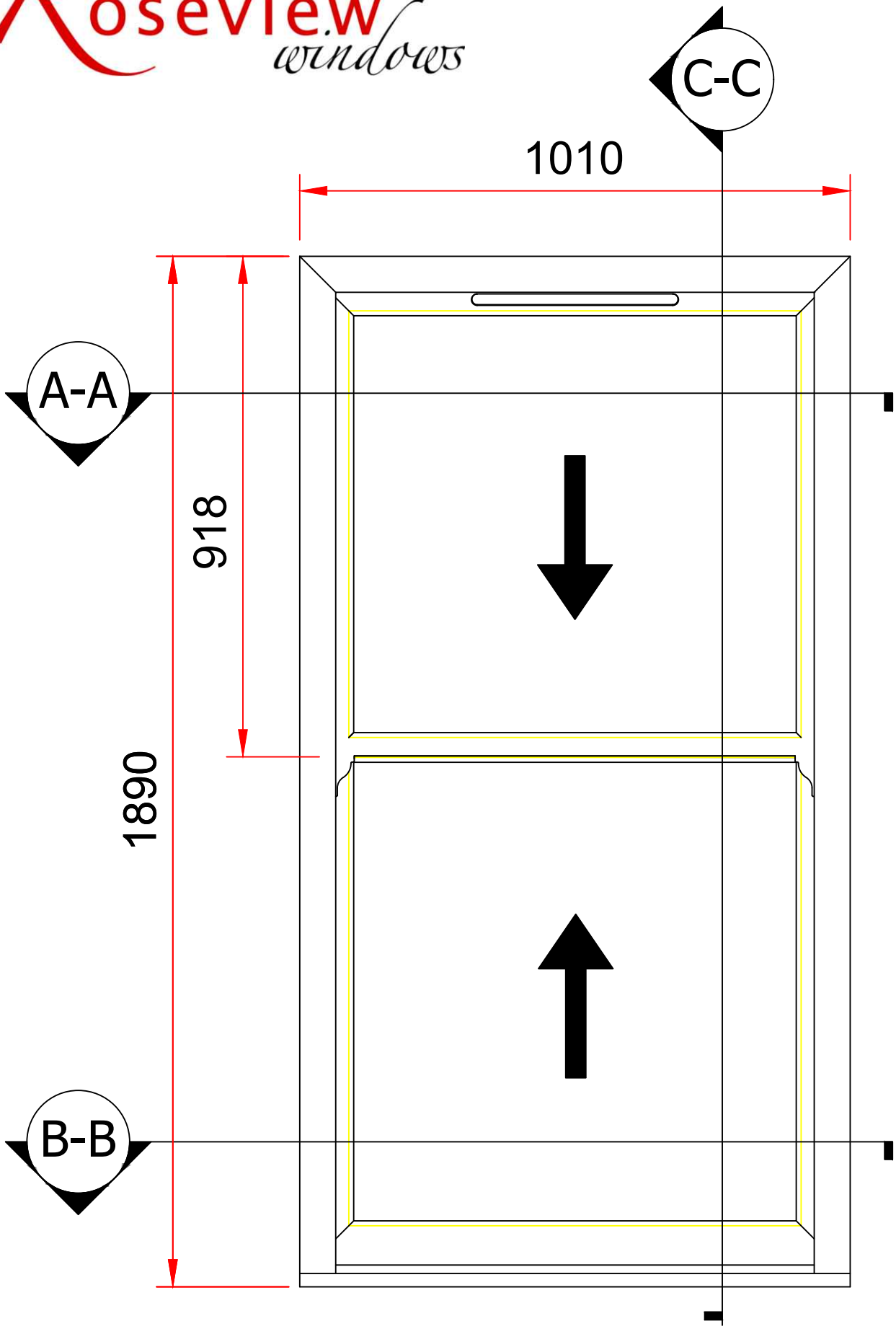

Frame No:5 Elevation

Heritage rose

Quote Number 49881d Rev1 Roseview Heritage
© October 2024
Scale 1:10 @ A4

Scale 1:10 0 100 200 300 400 500 600 700 800 900 1000