ARCH ASSOCIATES

SUDS VERIFICATION REPORT

KINGSTON WHARF,
SHOREHAM-BY-SEA

ARCH ASSOCIATES

SUDS VERIFICATION REPORT

for

KINGSTON WHARF
SHOREHAM-BY-SEA

Client:
PMC Construction

ISSUE		A	B	C
Issued By	C Hendry			
Date	May 2025			
Purpose	Information			
Approved By	CH			

Project No. PMC290

ARCH ASSOCIATES

CONTENTS

1.0 Introduction

2.0 Drainage Verification

3.0 Conclusion

APPENDIX 1 – Drainage Design Information

APPENDIX 2– As-Built Survey Information

ARCH ASSOCIATES

1.0 Introduction

Arch Associates Limited has been commissioned by PMC Construction to prepare a Surface Water Drainage Verification Report for the development at Kingston Wharf, Shoreham-By-Sea, Planning reference AWDM/0511/21.

A pre-occupation planning condition has been applied, which is worded as follows:

Drainage 3

27. No phase of development shall be occupied until the complete surface water drainage system serving the site has been implemented in accordance with the details approved under condition 3 (the phasing condition). Immediately following implementation of the approved surface water drainage system and prior to occupation of any part of the development, as-built drawings of the implemented scheme together with a completion report prepared by an independent engineer, shall be submitted to the Local Planning Authority together with confirmation that the scheme has been built in accordance with the approved details and is fit for purpose.

Reason: To ensure that the proposed development is satisfactorily drained and managed in accordance with Policy 36 of the Adur Local Plan 2017, SH6 of the Shoreham Harbour Joint Area Action Plan 2019 and paras 163-165 of the National Planning Policy Framework, 2019

2.0 Drainage Verification

2.1 The surface water drainage on site was designed by HOP Ltd. and the construction issue drawings can be found in Appendix 1.

2.2 Surface water is proposed to discharge directly to the tidal waters of the River Adur.

2.3 As can be seen on the appended plans, new outfalls are proposed to convey the surface water runoff from the development to the harbour.

2.4 Existing public sewer infrastructure has been diverted and routed to new outfalls to maintain the existing flow routes for surface water drainage from the wider sewer network and from an existing combined sewer overflow.

2.5 Foul water discharges via gravity to the public foul water sewer assets located to the north of the site in the Highway.

2.6 Arch Associates Limited have visited the site to visually inspect the installation as part of our scope with PMC Construction

2.7 Extensive As-Built surveys have been undertaken by the appointed groundworker, Blanchard Wells, which have been included in Appendix 2. These provide a comprehensive and detailed record of the installed arrangement and therefore form the primary basis of this report.

3.0 Conclusion

3.1 Arch Associates Limited have reviewed the as-built drainage information and compared it to the design intent.

3.2 We understand the system has been functioning effectively since completion.

3.3 **Based on the record information provided, we are satisfied that the drainage has been installed in accordance with the design intent.**

[redacted]

Chris Hendry MSc CEng MIStructE
Director
For and on behalf of Arch Associates Limited

ARCH ASSOCIATES

APPENDIX 1

Drainage Design Drawings

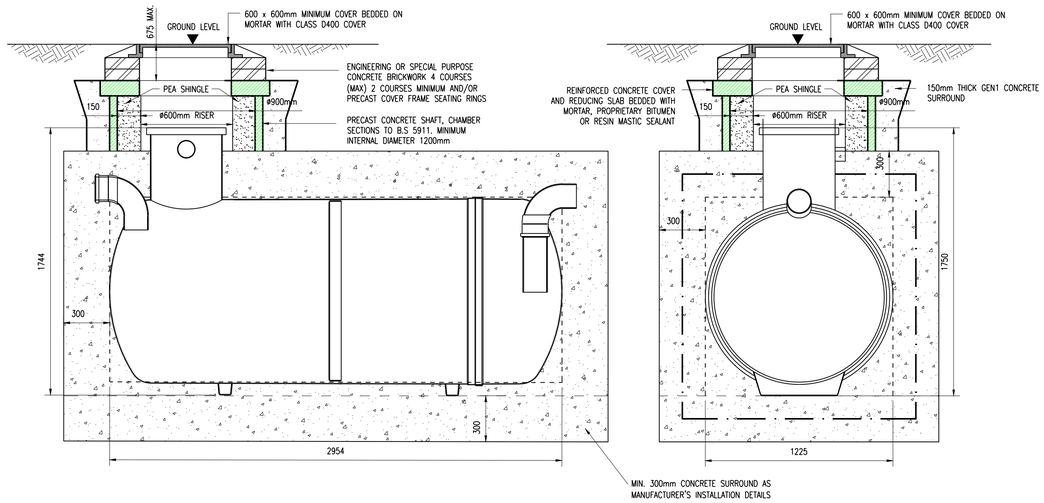

KLARGESTER BYPASS SEPARATOR
(TYPICAL DETAIL – REFER TO STRUCTURAL DRAWINGS FOR CONCRETE DETAILS)
(1:20)

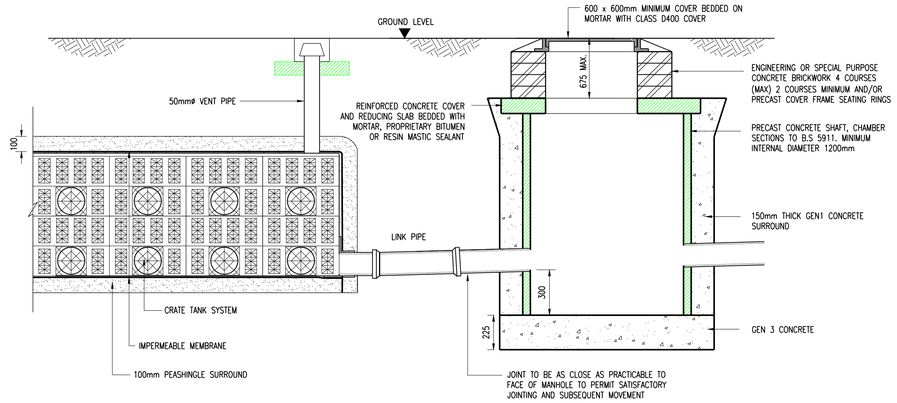

TYPICAL ATTENUATION TANK DETAIL
(1:20)

CATCHPIT TO INVERT 0.9m TO 2.7m.
(1:20)

Project/Task No. 12276 Scale: AS SHOWN ORIGINAL DRAWING SIZE A1

1. GENERAL

(i) This drawing is not to be scaled, work to figured dimensions only, confirmed on site.

(ii) This drawing is to be read in conjunction with all relevant architectural drawings, detailed specifications where applicable and all associated drawings in this series.

(iii) Any discrepancy on this drawing is to be reported immediately to the partnership for clarification.

(iv) The contractor is responsible for all temporary works and for the stability of the works in progress.

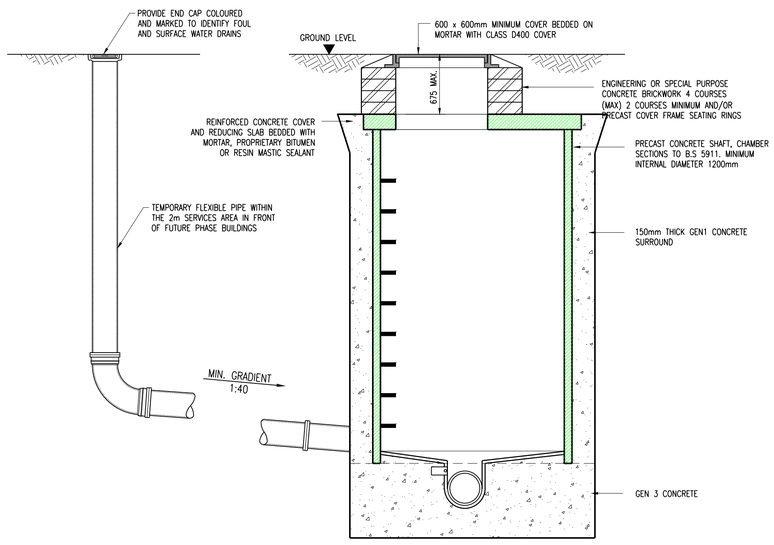

TEMPORARY DEMARCATION OF FUTURE CONNECTIONS TO MAIN DRAINAGE.
(1:20)

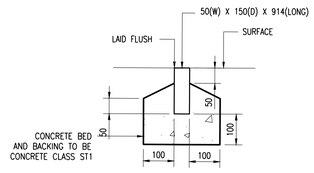

EDGING TYPE EF FLAT TOP
(1:10)

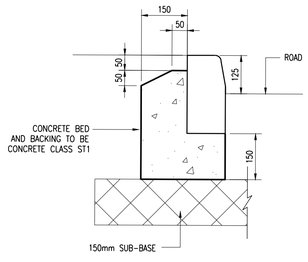

FULL HEIGHT KERB TYPE HB2
(1:10)

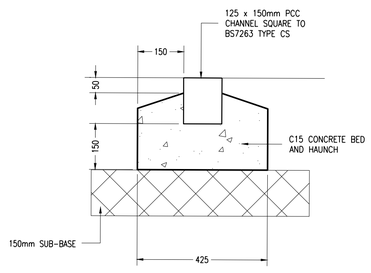

CHANNEL SQUARE KERB DETAIL
(1:10)

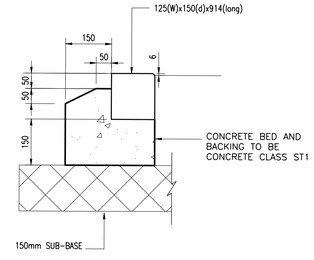

DROP KERB TYPE BN
(1:10)

ISSUED FOR CONSTRUCTION	IMR	A.K.	12.01.23	C1
CONTRACT ISSUE	IMR	A.K.	07.10.22	P1
Description	By	Aprvd.	Date	Rev.

ISSUED FOR CONSTRUCTION

Title: DRAINAGE DETAILS SHEET 2 OF 2

Project: KINGSTON WHARF SHOREHAM-BY-SEA

Client: PMC

HOP
CONSULTING CIVIL AND STRUCTURAL ENGINEERS
HOP House, 41 Church Road
Hove, East Sussex BN3 2BE
www.hop.uk.com
ask@hop.uk.com
+44 (0)1273 223900

Drawing No. 12276-HOP-00-XX-DR-C-9251 Status S4 Rev. C1

© Copyright

1:20 0 0.2m 0.4m 0.6m 0.8m 1m
1:50 0 0.5m 1m 1.5m 2m 2.5m
1:100 0 1m 2m 3m 4m 5m

© P:\PROJECTS\12276 Kingston Wharf 88n Rd Shoreham Harbour\Drawings\dsk 07 - New Mixed Use Development\HOP\Civils\12276-07-Drainage Details Ivan Hamnett

Project/Task No. 12276 Scale: AS SHOWN ORIGINAL DRAWING SIZE A1

1. GENERAL

(i) This drawing is not to be scaled, work to figured dimensions only, confirmed on site.

(ii) This drawing is to be read in conjunction with all relevant architectural drawings, detailed specifications where applicable and all associated drawings in this series.

(iii) Any discrepancy on this drawing is to be reported immediately to the partnership for clarification.

(iv) The contractor is responsible for all temporary works and for the stability of the works in progress.

LEGEND

- SITE BOUNDARY
- SOFT LANDSCAPE

ADOPTABLE HIGHWAY DRAINAGE

- EXISTING HIGHWAYS SURFACE WATER DRAINAGE
- REMOVED/INFILL REDUNDANT SEWER
- EXISTING PRE-CAST CONCRETE RING MANHOLE
- EXISTING HIGHWAYS SURFACE WATER DRAINAGE

ADOPTABLE SOUTHERN WATER DRAINAGE

- EXISTING SOUTHERN WATER SURFACE WATER DRAINAGE
- EXISTING SOUTHERN WATER FOUL WATER DRAINAGE
- EXISTING SOUTHERN WATER COMBINED WATER DRAINAGE
- REMOVE REDUNDANT EXISTING SOUTHERN WATER SURFACE WATER DRAINAGE
- REMOVED/INFILL REDUNDANT SEWER EXISTING SOUTHERN WATER FOUL WATER DRAINAGE
- REMOVED/INFILL REDUNDANT SEWER EXISTING SOUTHERN WATER COMBINED WATER DRAINAGE
- ADOPTABLE PRE-CAST CONCRETE RING MANHOLE
- ADOPTABLE SOUTHERN WATER COMBINED WATER DRAINAGE
- ADOPTABLE SOUTHERN WATER SURFACE WATER SEWER
- EASEMENT FOR SOUTHERN WATER SEWER DIVERSION

NON-ADOPTABLE PRIVATE DRAINAGE**

- PRIVATE FOUL WATER DRAINAGE
- PRIVATE SURFACE WATER DRAINAGE
- TYPE 3 POLYPROPYLENE 450mmø OR 600ø INSPECTION CHAMBER (PPIC)
- PRE-CAST CONCRETE RING MANHOLE (PC MH)
- PRIVATE ACO CHANNEL DRAIN
- PRIVATE GULLY
- RWP RAINWATER PIPE/SOIL AND VENT PIPE

* ALL BELOW GROUND PIPE CONNECTIONS TO BE MADE USING OBLIQUE 45 DEGREE JUNCTIONS
* FOR DRAINAGE NOTES SEE PLAN 12276-HOP-00-XX-DR-C-9200
** ORANGE DRAINAGE DENOTES EXTENT OF PHASE 2 DRAINAGE WORKS
*** SITE TO BE LEVELLED TO FORMATION WITH SUITABLE MATERIAL TO FORM PAVEMENT CAPPING LAYER WITH MINIMUM CBR VALUE OF 5%

SOUTHERN WATER MH REF.9053 CL 4.73 IL ---

SOUTHERN WATER MH REF.9054 CL 3.90(R) IL 1.45(R)

SOUTHERN WATER MH REF.9055 CL 3.96(R) IL 1.21(R)

SOUTHERN WATER MH REF.0092 CL 3.95(R) IL 1.07(R)

SW PPIC 600ø CL 4.700m IL 3.670m

SW PPIC 600ø CL 4.700m IL 3.830m

SOUTHERN WATER PC MH SW1 TYPE B 1800ø CL 4.660m IL 1.140m

SW MH 1200ø CL 4.700m IL 3.670m

SW MH 1500ø CL 4.700m IL 3.485m

SW MH 1500ø CL 4.700m IL 3.190m

SW MH 1500ø CL 4.700m IL 3.010m

SW MH 1500ø CL 4.700m IL 2.740m

SW MH 1500ø CL 4.700m IL 2.555m

SW MH CL 4.75 IL 2.45

SW MH WITH SEALED AND BOLTED DOWN COVER 1200ø CL 4.940m IL 2.400m

FW PC MH CL 4.900 IL IN 4.200 IL OUT 4.15 DEPTH 0.7

FW PC MH CL 4.700 IL IN 3.777 IL OUT 3.727 DEPTH 1.123

FW PC MH CL 4.775 IL 3.950 DEPTH 0.825

FW7 PPIC CL 4.723 IL 3.540 DEPTH 1.183

FW6 PPIC CL 4.400 IL 3.190 DEPTH 1.210

NON RETURN VALVE

KINGSPAN NSFA050 FULL RETENTION SEPARATOR WITH ALARM INLET 2.530 OUTLET 2.480

CRATE ATTENUATION TANK TO ACCOMMODATE UP TO 2Hrs 1in2yr +40%cc STORM DURING 1in200yr TIDE LOCKING EVENTS 5.0x13.0x1.2m DEEP. PROVIDE VENT TO AIR. IL 2.50 FINAL SIZE OF TANK TO BE CONFIRMED PENDING AWC DRAINAGE ENGINEER APPROVAL

INTERNAL SURFACE AND FOUL WATER DRAINAGE ARRANGEMENT TO BE CONFIRMED. ROOF RUNOFF DRAINAGE TO BE DIRECTED TO SOUTHERN ELEVATION

NO TREES WITHIN 5m OF PROPOSED SOUTHERN WATER DIVERTED SEWER

SEALED AND BOLTED DOWN COVER

EXISTING HIGHWAYS MH CL 3.660 IL 1.860

SOUTHERN WATER 900mm OUTFALL WITH NON-RETURN FLAP VALVE IL 0.90m

3.00m

EASEMENT REQUIRED FOR DIVERTED SOUTHERN WATER SURFACE WATER OUTFALL SHOWN INDICATIVELY, TO BE CONFIRMED BY SOUTHERN WATER

NEW OUTFALL WITH 300mm TIDAL NON-RETURN FLAP VALVE IL 2.350

FFL +4.940

+4.940

+4.400

+4.940

+4.400

SW225ø 1:100

SW400ø 1:100

SW300ø 1:100

SW150ø 1:80

FW100ø 1:100

FW150ø 1:80

600

750 NL-R

900 NL-R

900

UTS/NF1

RECEPTION

CO-WORKING SPACE

OFFICE

STORAGE AREA

CORRIDOR

ESCAPE STAIR

REFUSE STORE

PLANTROOM

KITCHENETTE

MALE WC

FEMALE WC

ACCESSIBLE WC

CYCLE STORE

MALE CHANGE

FEMALE CHANGE

GYM

MEETING ROOM

CAFE

OPERATIONS

RECEPTION

LOADING BAY

SERVICE

BACK

1:271

KEY PLAN
(1:1250)

N

INDICATIVE ONLY

1:200
0 2m 4m 6m 8m 10m

1:1250
0 12.5m 25m 37.5m 50m 62.5m

EXISTING DRAINAGE INFORMATION BASED ON SOUTHERN WATER SEWER RECORDS AND CCTV SURVEY BY SUBSIGHT SURVEYS LTD DATED JAN'17.

1:20 0 0.2m 0.4m 0.6m 0.8m 1m
1:50 0 0.5m 1m 1.5m 2m 2.5m
1:100 0 1m 2m 3m 4m 5m

Description	By	Aprvd.	Date	Rev.
ISSUED FOR CONSTRUCTION	IMR	A.K.	12.01.23	C1
PHASE 2 DRAINAGE WORKS SHADED	IMR	A.K.	11.08.22	P9
ISSUED FOR INFORMATION	IMR	A.K.	25.07.22	P8
ISSUED FOR INFORMATION	IMR	A.K.	01.07.22	P7
ISSUED FOR INFORMATION	IMR	A.K.	11.04.22	P6
STAGE 4A ISSUE	IMR	A.K.	09.12.21	P5
STAGE 4A ISSUE	IMR	A.K.	02.07.21	P4
PRELIMINARY PRICING ISSUE	BAK	AK	01.04.21	P3
UPDATED AS SHOWN	A.R	A.K.	18.12.19	P2
FIRST ISSUE	A.R	A.K.	13.12.19	P1

ISSUED FOR INFORMATION

Title: COMMERCIAL SITE DRAINAGE PLAN

Project: KINGSTON WHARF SHOREHAM-BY-SEA

Client: PMC CONSTRUCTION

HOP
CONSULTING CIVIL AND STRUCTURAL ENGINEERS
HOP House, 41 Church Road
Hove, East Sussex BN3 2BE
www.hop.uk.com
ask@hop.uk.com
+44 (0)1273 223900

Drawing No. 12276-HOP-00-XX-DR-C-0501 Status S4 Rev. C1

© Copyright

P:\PROJECTS\12276 Kingston Wharf Bln Rd Shoreham Harbour\Drawings\Cad 07 - New Mixed Use Development\HOP\Cad\12276-HOP-00-XX-DR-C - Drainage Layout Ivan Rominez

Project/Task No. 12276 Scale: AS SHOWN ORIGINAL DRAWING SIZE A1

FOUL WATER MANHOLE SCHEDULE

REF.	CL	IL	DEPTH	DIA.	TYPE	COVER	E	N
FW 1	4.400	2.140	2.260	1200	TYPE 2	D400	523172.090	105013.930
FW 2	4.400	3.290	1.110	450	TYPE 3	C250	523161.020	105014.180
FW 3	4.400	3.354	1.046	450	TYPE 3	C250	523136.500	105019.160
FW 4	4.400	2.700	1.700	450	TYPE 3	D400	523106.880	105032.500
FW 5	4.400	2.940	1.460	450	TYPE 3	D400	523083.170	105037.500
FW 6	4.400	3.190	1.210	450	TYPE 3	D400	523058.700	105042.470
FW 7	4.723	3.540	1.183	450	TYPE 3	D400	523024.000	105047.020
FW 8	3.070	1.970	1.100	900x900	Rec.	D400	523071.860	105021.300
FW 9	3.070	1.775	1.295	900x900	Rec.	D400	523087.240	105018.590
FW 10	3.070	1.625	1.445	1.8x1.8m	Pump	D400	523088.630	105028.260
FW 11	3.070	2.220	0.850	900x900	Rec.	D400	523128.040	104997.000
FW 12	3.070	2.000	1.070	900x900	Rec.	D400	523145.920	104992.950
FW 13	3.070	1.720	1.350	900x900	Rec.	D400	523160.800	104988.320
FW 14	3.070	1.090	1.980	1.8x1.8m	Pump	D400	523165.480	105004.820
FW 15	3.070	2.045	1.025	900x900	Rec.	D400	523185.700	104979.840
FW 16	3.070	2.045	1.025	900x900	Rec.	D400	523197.140	104976.840
FW 17	3.070	1.625	1.445	900x900	Rec.	D400	523221.810	104967.650
FW 18	3.070	1.350	1.720	1.8x1.8m	Pump	D400	523228.650	104984.880
FW 19	3.070	1.820	1.250	900x900	Rec.	D400	523236.400	104962.260
FW 20	3.070	2.045	1.025	900x900	Rec.	D400	523252.520	104954.480
FW 21	4.400	3.550	0.850	450	TYPE 3	C250	523260.250	104978.990
FW 22	4.400	3.300	1.100	450	TYPE 3	D400	523238.500	104989.500
FW 23	4.400	Existing	-	1200	TYPE 2	D400	523217.370	104997.700
FW 24	4.400	3.140	1.260	450	TYPE 3	D400	523182.530	105008.000

STORM WATER MANHOLE SCHEDULE

REF.	CL	IL	DEPTH	DIA.	TYPE	COVER	E	N
SW 1	3.655	2.450	1.205	900x900	Rec. CP	D400	523116.660	104998.150
SW 2	4.470	2.750	1.720	675x750	Rec. Valve	B125	523131.490	105022.350
SW 3	4.480	3.290	1.190	450	TYPE 3	C250	523108.130	105030.640
SW 4	4.420	3.770	0.650	450	TYPE 3	C250	523061.740	105040.980
SW 5	4.400	3.450	0.950	600	T.3 Rising Main	C250	523149.080	523149.080
SW 6	4.400	3.125	1.275	450	TYPE 3	C250	523175.060	105009.590
SW 7	4.400	3.380	1.020	450	TYPE 3	C250	523211.780	104998.800
SW 8	4.400	3.570	0.830	450	TYPE 3	C250	523237.450	104989.150
SW 9	4.400	3.750	0.650	450	TYPE 3	C250	523262.510	104979.650

SAPPIC ***TYPE 4***	Shallow access polypropylene inspection chamber maximum depth 600mm
PPIC ***TYPE 3***	Non-entry polypropylene inspection chamber. Cover to soffit level - up to 3.0m deep dia 450mm; 600mm. CP denotes silt trap
PC RING ***TYPE 2***	Pre-cast concrete ring manhole. Depth from cover level to soffit of pipe no greater than 3.0m. CP denotes catchpit sump of 300mm depth.
NOTE	Manhole depth indicates deepness from cover level to invert level of the lowest outlet pipe. MH coordinates are shown relative SeSurveying REF. 012-01-21 ISSUED 21/02/03. MH cordinates are to centre of chamber, some local adjustment may be required on site to allow for site conditions.

1. GENERAL

(i) This drawing is not to be scaled, work to figured dimensions only, confirmed on site.

(ii) This drawing is to be read in conjunction with all relevant architectural drawings, detailed specifications where applicable and all associated drawings in this series.

(iii) Any discrepancy on this drawing is to be reported immediately to the partnership for clarification.

(iv) The contractor is responsible for all temporary works and for the stability of the works in progress.

LEGEND

- SITE BOUNDARY
- SOFT LANDSCAPING

ADOPTABLE HIGHWAY DRAINAGE

- EXISTING HIGHWAYS SURFACE WATER DRAINAGE
- REMOVED/INFILL REDUNDANT SEWER
- ADOPTABLE PRE-CAST CONCRETE RING MANHOLE
- ADOPTABLE HIGHWAYS SURFACE WATER DRAINAGE

ADOPTABLE SOUTHERN WATER DRAINAGE

- EXISTING SOUTHERN WATER SURFACE WATER DRAINAGE
- EXISTING SOUTHERN WATER FOUL WATER DRAINAGE
- EXISTING SOUTHERN WATER COMBINED WATER DRAINAGE
- REMOVED/INFILL REDUNDANT SEWER EXISTING SOUTHERN WATER SURFACE WATER DRAINAGE
- REMOVED/INFILL REDUNDANT SEWER EXISTING SOUTHERN WATER FOUL WATER DRAINAGE
- REMOVED/INFILL REDUNDANT SEWER EXISTING SOUTHERN WATER COMBINED WATER DRAINAGE
- ADOPTABLE PRE-CAST CONCRETE RING MANHOLE
- ADOPTABLE SOUTHERN WATER COMBINED WATER DRAINAGE
- ADOPTABLE SOUTHERN WATER SURFACE WATER SEWER
- EASEMENT FOR SEWER DIVERSION

NON-ADOPTABLE PRIVATE DRAINAGE

- PRIVATE FOUL WATER DRAINAGE
- PRIVATE SURFACE WATER DRAINAGE
- TYPE 3 POLYPROPYLENE 450mmØ OR 600Ø INSPECTION CHAMBER (PPIC)
- Ø1.20m PC CONCRETE MANHOLE
- PRIVATE ACO CHANNEL DRAIN
- PRIVATE ROAD GULLY
- PRIVATE ROAD GULLY - UNDER GROUND CAR PARK GULLY - PLANT ROOM GULLY
- PRIVATE PUMP

- SUSPENDED DRAINAGE BY OTHERS
- ALL BELOW GROUND PIPE CONNECTIONS TO BE MADE USING OBLIQUE 45 DEGREE JUNCTIONS
- FOR DRAINAGE NOTES SEE PLAN 12276-HOP-00-XX-DR-C-9200

ISSUED FOR CONSTRUCTION	IMR	A.K.	12.01.23	C1
PERMEABLE PAVING REMOVED	IMR	A.K.	25.07.22	P10
DRAINAGE UPDATED AS CLOUDED RED	IMR	A.K.	01.07.22	P9
PIPE GRADIENTS AND DIAM. ADDED DRAINAGE UPDATED AS CLOUDED RED	IMR	A.K.	20.06.22	P8
FW CONNECTION TO PUBLIC SEWER UPDATED	IMR	A.K.	11.05.22	P7
ISSUED FOR INFORMATION	IMR	A.K.	11.04.22	P6
STAGE 4A ISSUE	IMR	A.K.	09.12.21	P5
STAGE 4A ISSUE	IMR	A.K.	02.07.21	P4
PRELIMINARY PRICING ISSUE	BAK	AK	01.04.21	P3
UPDATED AS SHOWN	A.R	A.K.	18.12.19	P2
FIRST ISSUE	A.R	A.K.	13.12.19	P1
Description	By	Aprvd.	Date	Rev.

ISSUED FOR CONSTRUCTION

Title: RESIDENTIAL SITE DRAINAGE PLAN SHEET 1 OF 2

Project: KINGSTON WHARF SHOREHAM-BY-SEA

Client: PMC CONSTRUCTION

HOP
CONSULTING CIVIL AND STRUCTURAL ENGINEERS
HOP House, 41 Church Road
Hove, East Sussex BN3 2BE
www.hop.uk.com
ask@hop.uk.com
+44 (0)1273 223900

Drawing No. 12276-HOP-00-XX-DR-C-0502 Status S4 Rev. C1

KEY PLAN (1:1250)

EXISTING DRAINAGE INFORMATION BASED ON SOUTHERN WATER SEWER RECORDS AND CCTV SURVEY BY SUBSIGHT SURVEYS LTD DATED JAN'17.

INDICATIVE ONLY 1:200

© Copyright

P:\PROJECTS\12276 Kingston Wharf, Bin Rd Shoreham Harbour\Drawings\Vob 07 - New Mixed Use Development\HOP\Cmds\12276-HOP-00-XX-DR-C-0502.dwg

STORM WATER MANHOLE SCHEDULE								
REF.	CL	IL	DEPTH	DIA.	TYPE	COVER	E	N
SW 1	3.655	2.450	1.205	900x900	Rec. CP	D400	523116.660	104998.150
SW 2	4.470	2.750	1.720	675x750	Rec. Valve	B125	523131.490	105022.350
SW 3	4.480	3.290	1.190	450	TYPE 3	C250	523108.130	105030.640
SW 4	4.420	3.770	0.650	450	TYPE 3	C250	523061.740	105040.980
SW 5	4.400	3.450	0.950	600	T.3 Rising Main	C250	523149.080	523149.080
SW 6	4.400	3.125	1.275	450	TYPE 3	C250	523175.060	105009.590
SW 7	4.400	3.380	1.020	450	TYPE 3	C250	523211.780	104998.800
SW 8	4.400	3.570	0.830	450	TYPE 3	C250	523237.450	104989.150
SW 9	4.400	3.750	0.650	450	TYPE 3	C250	523262.510	104979.650
S.A.PPIC TYPE 4	Shallow access polypropylene inspection chamber maximum depth 600mm							
PPIC TYPE 3	Non-entry polypropylene inspection chamber. Cover to soffit level - up to 3.0m deep dia 450mm; 600mm. CP denotes silt trap							
PC RING TYPE 2	Pre-cast concrete ring manhole. Depth from cover level to soffit of pipe no greater than 3.0m. CP denotes catchpit sump of 300mm depth.							
NOTE	Manhole depth indicates deepness from cover level to invert level of the lowest outlet pipe. MH coordinates are shown relative SeSurveying REF. 012-01-21 ISSUED 21/02/03. MH cordinates are to centre of chamber, some local adjustment may be required on site to allow for site conditions.							

FOUL WATER MANHOLE SCHEDULE								
REF.	CL	IL	DEPTH	DIA.	TYPE	COVER	E	N
FW 1	4.400	2.140	2.260	1200	TYPE 2	D400	523172.090	105013.930
FW 2	4.400	3.290	1.110	450	TYPE 3	C250	523161.020	105014.180
FW 3	4.400	3.354	1.046	450	TYPE 3	C250	523136.500	105019.160
FW 4	4.400	2.700	1.700	450	TYPE 3	D400	523106.880	105032.500
FW 5	4.400	2.940	1.460	450	TYPE 3	D400	523083.170	105037.500
FW 6	4.400	3.190	1.210	450	TYPE 3	D400	523058.700	105042.470
FW 7	4.723	3.540	1.183	450	TYPE 3	D400	523024.000	105047.020
FW 8	3.070	1.970	1.100	900x900	Rec.	D400	523071.860	105021.300
FW 9	3.070	1.775	1.295	900x900	Rec.	D400	523087.240	105018.590
FW 10	3.070	1.625	1.445	1.8x1.8m	Pump	D400	523088.630	105028.260
FW 11	3.070	2.220	0.850	900x900	Rec.	D400	523128.040	104997.000
FW 12	3.070	2.000	1.070	900x900	Rec.	D400	523145.920	104992.950
FW 13	3.070	1.720	1.350	900x900	Rec.	D400	523160.800	104988.320
FW 14	3.070	1.090	1.980	1.8x1.8m	Pump	D400	523165.480	105004.820
FW 15	3.070	2.045	1.025	900x900	Rec.	D400	523185.700	104979.840
FW 16	3.070	2.045	1.025	900x900	Rec.	D400	523197.140	104976.840
FW 17	3.070	1.625	1.445	900x900	Rec.	D400	523221.810	104967.650
FW 18	3.070	1.350	1.720	1.8x1.8m	Pump	D400	523228.650	104984.880
FW 19	3.070	1.820	1.250	900x900	Rec.	D400	523236.400	104962.260
FW 20	3.070	2.045	1.025	900x900	Rec.	D400	523252.520	104954.480
FW 21	4.400	3.550	0.850	450	TYPE 3	C250	523260.250	104978.990
FW 22	4.400	3.300	1.100	450	TYPE 3	D400	523238.500	104989.500
FW 23	4.400	Existing	-	1200	TYPE 2	D400	523217.370	104997.700
FW 24	4.400	3.140	1.260	450	TYPE 3	D400	523182.530	105008.000

Project/Task No. 12276 Scale: AS SHOWN ORIGINAL DRAWING SIZE A1

1. GENERAL

(i) This drawing is not to be scaled, work to figured dimensions only, confirmed on site.

(ii) This drawing is to be read in conjunction with all relevant architectural drawings, detailed specifications where applicable and all associated drawings in this series.

(iii) Any discrepancy on this drawing is to be reported immediately to the partnership for clarification.

(iv) The contractor is responsible for all temporary works and for the stability of the works in progress.

LEGEND

- SITE BOUNDARY
- SOFT LANDSCAPING

ADOPTABLE HIGHWAY DRAINAGE

- EXISTING HIGHWAYS SURFACE WATER DRAINAGE
- REMOVED/INFILL REDUNDANT SEWER
- ADOPTABLE PRE-CAST CONCRETE RING MANHOLE
- ADOPTABLE HIGHWAYS SURFACE WATER DRAINAGE

ADOPTABLE SOUTHERN WATER DRAINAGE

- EXISTING SOUTHERN WATER SURFACE WATER DRAINAGE
- EXISTING SOUTHERN WATER FOUL WATER DRAINAGE
- EXISTING SOUTHERN WATER COMBINED WATER DRAINAGE
- REMOVED/INFILL REDUNDANT SEWER EXISTING SOUTHERN WATER SURFACE WATER DRAINAGE
- REMOVED/INFILL REDUNDANT SEWER EXISTING SOUTHERN WATER FOUL WATER DRAINAGE
- REMOVED/INFILL REDUNDANT SEWER EXISTING SOUTHERN WATER COMBINED WATER DRAINAGE
- ADOPTABLE PRE-CAST CONCRETE RING MANHOLE
- ADOPTABLE SOUTHERN WATER COMBINED WATER DRAINAGE
- ADOPTABLE SOUTHERN WATER SURFACE WATER SEWER
- EASEMENT FOR SEWER DIVERSION

NON-ADOPTABLE PRIVATE DRAINAGE

- PRIVATE FOUL WATER DRAINAGE
- PRIVATE SURFACE WATER DRAINAGE
- TYPE 3 POLYPROPYLENE 450mmØ OR 600Ø INSPECTION CHAMBER (PPIC)
- Ø1.20m PC CONCRETE MANHOLE
- PRIVATE ACO CHANNEL DRAIN
- PRIVATE ROAD GULLY
- PRIVATE ROAD GULLY - UNDER GROUND CAR PARK GULLY - PLANT ROOM GULLY
- PRIVATE PUMP

- SUSPENDED DRAINAGE BY OTHERS
- ALL BELOW GROUND PIPE CONNECTIONS TO BE MADE USING OBLIQUE 45 DEGREE JUNCTIONS
- FOR DRAINAGE NOTES SEE PLAN 12276-HOP-00-XX-DR-C-9200

Description	By	Aprvd.	Date	Rev.
ISSUED FOR CONSTRUCTION	IMR	A.K.	12.01.23	C1
PERMEABLE PAVING REMOVED	IMR	A.K.	25.07.22	P11
DRAINAGE UPDATED AS CLOUDED RED	IMR	A.K.	08.07.22	P10
DRAINAGE UPDATED AS CLOUDED RED	IMR	A.K.	01.07.22	P9
PIPE GRADIENTS AND DIAM. ADDED DRAINAGE UPDATED AS CLOUDED RED	IMR	A.K.	20.06.22	P8
SOUTHERN WATER EASTERN DIVERSION UPDATED	IMR	A.K.	08.06.22	P7
ISSUED FOR INFORMATION	IMR	A.K.	11.04.22	P6
STAGE 4A ISSUE	IMR	A.K.	09.12.21	P5
STAGE 4A ISSUE	IMR	A.K.	02.07.21	P4
PRELIMINARY PRICING ISSUE	BAK	AK	01.04.21	P3
TIDE LOCK ATTENUATION TANK ADDED	A.R	A.K.	18.12.19	P2
FIRST ISSUE	A.R	A.K.	13.12.19	P1

ISSUED FOR CONSTRUCTION

Title: RESIDENTIAL SITE DRAINAGE PLAN SHEET 2 OF 2

Project: KINGSTON WHARF SHOREHAM-BY-SEA

Client: PMC CONSTRUCTION

HOP
CONSULTING CIVIL AND STRUCTURAL ENGINEERS
HOP House, 41 Church Road
Hove, East Sussex BN3 2BE
www.hop.uk.com
ask@hop.uk.com
+44 (0)1273 223900

Drawing No. 12276-HOP-00-XX-DR-C-0503 Status S4 Rev. C1

KEY PLAN (1:1250)

EXISTING DRAINAGE INFORMATION BASED ON SOUTHERN WATER SEWER RECORDS AND CCTV SURVEY BY SUBSIGHT SURVEYS LTD DATED JAN'17.

INDICATIVE ONLY

1:200 0 2m 4m 6m 8m 10m

1:1250 0 12.5m 25m 37.5m 50m 62.5m

© Copyright

Howard Kent

P:\PROJECTS\12276 Kingston Wharf, Bth Rd Shoreham Harbour\Drawings\Issue 01 - New Mixed Use Development\HOP\Cmds\12276-HOP-00-XX-DR-C- Drainage Layout Ivan Ramirez

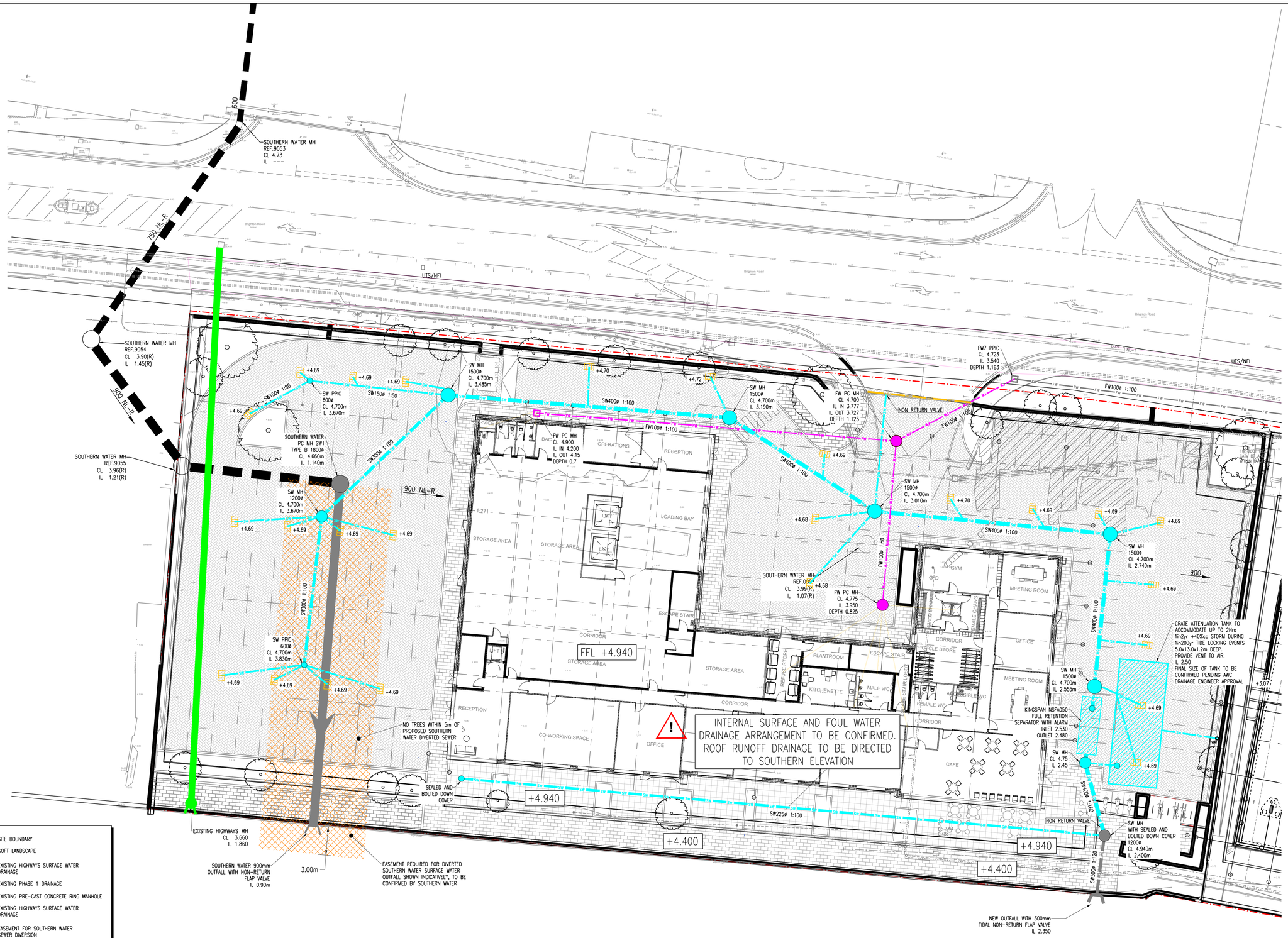

LEGEND

- SITE BOUNDARY
- SOFT LANDSCAPE
- EXISTING HIGHWAYS SURFACE WATER DRAINAGE
- EXISTING PHASE 1 DRAINAGE
- EXISTING PRE-CAST CONCRETE RING MANHOLE
- EXISTING HIGHWAYS SURFACE WATER DRAINAGE
- EASEMENT FOR SOUTHERN WATER SEWER DIVERSION
- Fw PRIVATE FOUL WATER DRAINAGE
- Sw PRIVATE SURFACE WATER DRAINAGE
- TYPE 3 POLYPROPYLENE 450mmø OR 600ø INSPECTION CHAMBER (PPIC)
- PRE-CAST CONCRETE RING MANHOLE (PC MH)
- ACO PRIVATE ACO CHANNEL DRAIN
- PRIVATE GULLY
- RWP RAINWATER PIPE/SOIL AND VENT PIPE

* ALL BELOW GROUND PIPE CONNECTIONS TO BE MADE USING OBLIQUE 45 DEGREE JUNCTIONS
** ORANGE DRAINAGE DENOTES SUGGESTED FINAL DRAINAGE ARRANGEMENT

- EXISTING DRAINAGE INFORMATION BASED ON SOUTHERN WATER SEWER RECORDS AND CCTV SURVEY BY SUBSIGHT SURVEYS LTD DATED JAN'17.
- SUGGESTED FINAL DRAINAGE SHOWN INDICATIVELY BASED ON ECE PLAN Ref.6670-PL8100-Rev.F.
- PROPOSED DRAINAGE LATERALS TO BE RAISED TO FORMATION LEVEL AND VISIBLE POPUPS PROVIDED TO IDENTIFY FUTURE DRAINAGE CONNECTIONS.

N

INDICATIVE ONLY

1:200
0 2m 4m 6m 8m 10m

Project/Task No. 12276 Scale: AS SHOWN ORIGINAL DRAWING SIZE A1

1. GENERAL

(i) This drawing is not to be scaled, work to figured dimensions only, confirmed on site.

(ii) This drawing is to be read in conjunction with all relevant architectural drawings, detailed specifications where applicable and all associated drawings in this series.

(iii) Any discrepancy on this drawing is to be reported immediately to the partnership for clarification.

(iv) The contractor is responsible for all temporary works and for the stability of the works in progress.

2. DRAINAGE GENERAL

(i) All foul and storm water drains which are not to be adopted as public sewers under a section 104 Agreement must be constructed in accordance with the Building Regulations, BS EN 752 and where appropriate the relevant agreement certificates.

(ii) Manholes, gullies, gully connections, sewers and other sewerage structures intended to convey surface water are to be constructed in accordance with the Water Authorities Association Specification 'Sewers for Adoption' 7th Edition and relevant Council Design Guide.

(iii) All concrete used in drainage works to comply with BRE Digest 363 for Class 2 sulphate conditions.

3. BELOW GROUND DRAINAGE

(i) Pipework to be UPVC-U pipes to BS 4660 : 2000 and Inspection Chambers to BS 7158 : 2001.

(ii) All adoptable drainage to be constructed in accordance with 'Sewers for Adoption' 7th Edition and the relevant Council Design Guide.

(iii) All private surface water sewers to be laid at 1 in 80 unless otherwise stated on the drawing.

(iv) All private foul water sewers to be laid at 1 in 40 at the head of pipe runs and 1 in 80 elsewhere unless otherwise stated.

(v) All private foul sewer pipes to be 100mm diameter unless otherwise stated on the drawing. All private surface water sewer pipes to be 100mm diameter from downpipes and 150mm diameter elsewhere unless otherwise stated on the drawing.

(vi) Allow for rodding access above ground where rainwater downpipes do not have a direct connection to an inspection chamber.

(vii) Existing sewer pipe to be re-used to be surveyed and levelled prior to commencement of the drainage works and refurbished if necessary.

(viii) Connections to an adopted sewer only to be made following approval from the relevant adopting Authority.

(ix) All drains, sewer pipes and manholes to be cleaned and tested for water tightness on completion of construction.

4. MANHOLE COVERS & FRAMES

(i) Manhole covers to be class D400 in highways, class B125 in footways and verges, class C250 in external maintenance vehicle access areas and verges, and class A15 in non-trafficked areas.

(ii) Manhole covers and frames to be bedded and surrounded in 1:3 mortar.

5. PIPES

(i) Plastic pipes shall be of unplasticised polyvinyl chloride (UPVC) complying with the requirements of BS EN 1401-1:2009.

(ii) Concrete pipes shall be spun by a centrifugal process or be vertically pressed. They shall possess self inverting sockets and shall comply with the requirements of and be tested in accordance with BS 5911:2002.

ISSUED FOR CONSTRUCTION	IMR	A.K.	12.01.23	C1
CONTRACT ISSUE	IMR	A.K.	07.10.22	P2
ISSUED FOR INFORMATION	IMR	A.K.	11.08.22	P1
Description	By	Aprvd.	Date	Rev.

ISSUED FOR CONSTRUCTION

Title: DRAINAGE ENABLING WORKS

Project: KINGSTON WHARF
SHOREHAM-BY-SEA

Client: PMC

HOP
CONSULTING CIVIL AND STRUCTURAL ENGINEERS
HOP House, 41 Church Road
Hove, East Sussex BN3 2BE
www.hop.uk.com
ask@hop.uk.com
+44 (0)1273 223900

Drawing No. 12276-HOP-00-XX-DR-C-0550 Status S4 Rev. C1

© Copyright

1:20 0 0.2m 0.4m 0.6m 0.8m 1m
1:50 0 0.5m 1m 1.5m 2m 2.5m
1:100 0 1m 2m 3m 4m 5m

P:\PROJECTS\12276 Kingston Wharf Bln Rd Shoreham Harbour\Drawings\Civils 07 - New Mixed Use Development\HOP\Civils\12276-HOP-00-XX-DR-C - Drainage Layout Ivan Ramirez

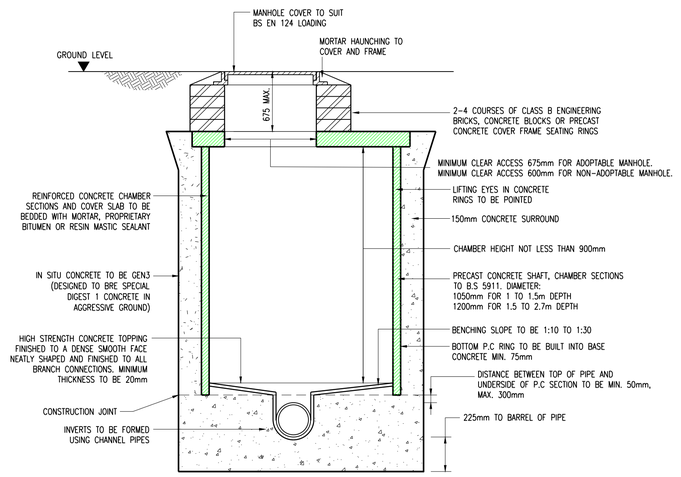

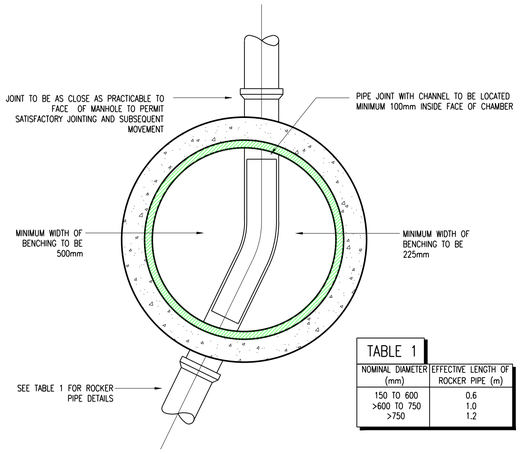

TABLE 1	
NOMINAL DIAMETER (mm)	EFFECTIVE LENGTH OF ROCKER PIPE (m)
150 TO 600	0.6
>600 TO 750	1.0
>750	1.2

PC MANHOLE TYPE B
(DEPTH FROM COVER LEVEL TO SOFFIT OF PIPE LESS THAN 3.0m)
(1:20)

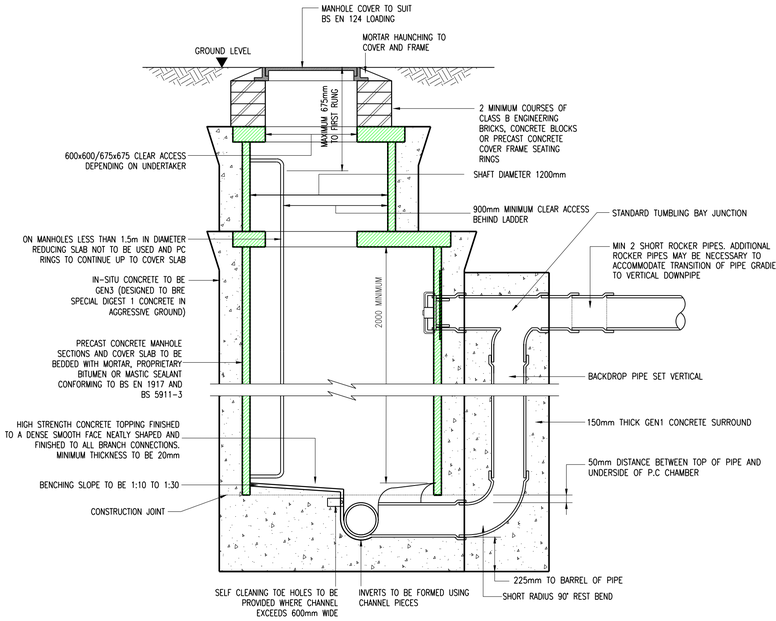

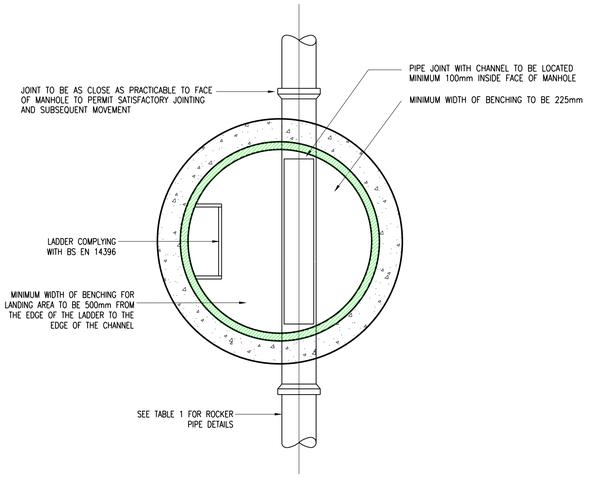

BACKDROP MANHOLE MORE THAN 3.0m DEEP
(1:20)

NOTE - OPENING TO BE LOCATED CENTRALLY OVER 900mm SHAFT AND OFFSET APPROXIMATELY 200mm FOR 1200mmø SHAFT WITH RUNGS/LADDER

NOTE: WHERE THE DROP IS NOT EXCESSIVE A 45° DROP PIPE MAY BE USED.

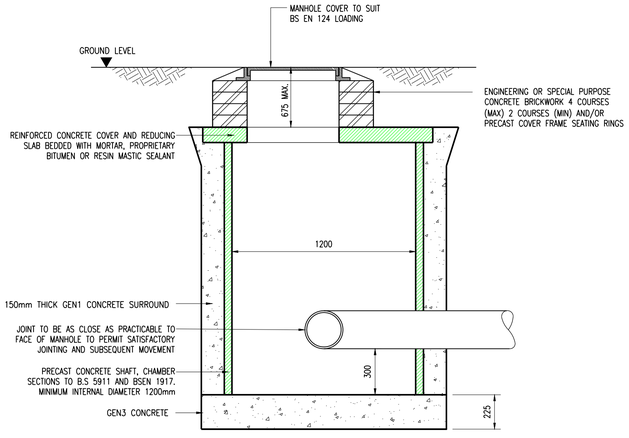

CATCHPIT TO INVERT 0.9m TO 2.7m.
(1:20)

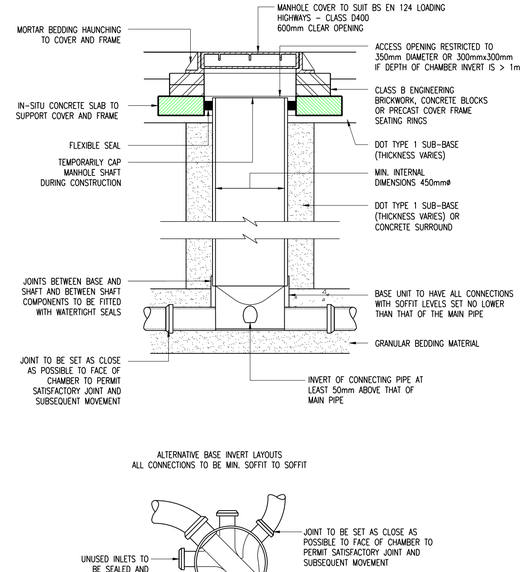

ALTERNATIVE BASE INVERT LAYOUTS
ALL CONNECTIONS TO BE MIN. SOFFIT TO SOFFIT

TYPE 3 ACCESS CHAMBER - FLEXIBLE MATERIAL
(SUBJECT TO VEHICLE LOADING, MAX. DEPTH 3m, NON-ENTRY)
(1:20)

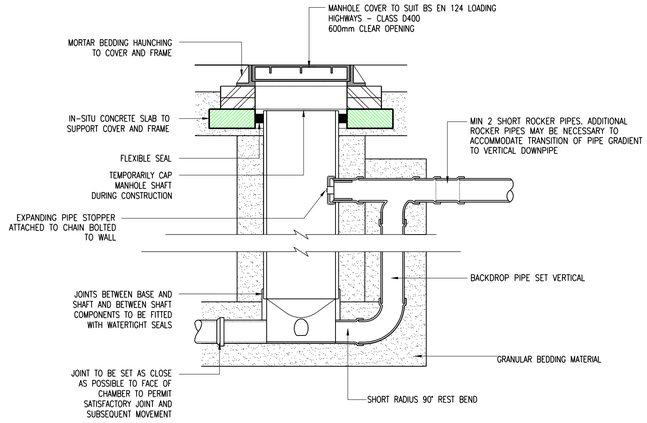

TYPE 3 ACCESS CHAMBER - FLEXIBLE MATERIAL BACKDROP INSPECTION CHAMBER
(SUBJECT TO VEHICLE LOADING, MAX. DEPTH 3m, NON-ENTRY)
(1:20)

Project/Task No. 12276 Scale: AS SHOWN ORIGINAL DRAWING SIZE A1

1. GENERAL
(i) This drawing is not to be scaled, work to figured dimensions only, confirmed on site.

(ii) This drawing is to be read in conjunction with all relevant architectural drawings, detailed specifications where applicable and all associated drawings in this series.

(iii) Any discrepancy on this drawing is to be reported immediately to the partnership for clarification.

(iv) The contractor is responsible for all temporary works and for the stability of the works in progress.

2. DRAINAGE GENERAL
(i) All foul and storm water drains which are not to be adopted as public sewers under a section 104 Agreement must be constructed in accordance with the Building Regulations, BS EN 752 and where appropriate the relevant agreement certificates.

(ii) Manholes, gullies, gully connections, sewers and other sewerage structures intended to convey surface water are to be constructed in accordance with the Water Authorities Association Specification "Sewers for Adoption" 7th Edition and relevant Council Design Guide.

(iii) All concrete used in drainage works to comply with BRE Digest 363 for Class 2 sulphate conditions.

3. BELOW GROUND DRAINAGE
(i) Pipework to be UPVC-U pipes to BS 4660 : 2000 and Inspection Chambers to BS 7158 : 2001.

(ii) All adoptable drainage to be constructed in accordance with "Sewers for Adoption" 7th Edition and the relevant Council Design Guide.

(iii) All private surface water sewers to be laid at 1 in 80 unless otherwise stated on the drawing.

(iv) All private foul water sewers to be laid at 1 in 40 at the head of pipe runs and 1 in 80 elsewhere unless otherwise stated.

(v) All private foul sewer pipes to be 100mm diameter unless otherwise stated on the drawing. All private surface water sewer pipes to be 100mm diameter from downpipes and 150mm diameter elsewhere unless otherwise stated on the drawing.

(vi) Allow for rodding access above ground where rainwater downpipes do not have a direct connection to an inspection chamber.

(vii) Existing sewer pipe to be re-used to be surveyed and levelled prior to commencement of the drainage works and refurbished if necessary.

(viii) Connections to an adopted sewer only to be made following approval from the relevant adopting Authority.

(ix) All drains, sewer pipes and manholes to be cleaned and tested for water tightness on completion of construction.

4. MANHOLE COVERS & FRAMES
(i) Manhole covers to be class D400 in highways, class B125 in footways and verges, class C250 in external maintenance vehicle access areas and verges, and class A15 in non-trafficked areas.

(ii) Manhole covers and frames to be bedded and surrounded in 1:3 mortar.

5. PIPES
(i) Plastic pipes shall be of unplasticised polyvinyl chloride (UPVC) complying with the requirements of BS EN 1401-1:2009.

(ii) Concrete pipes shall be spun by a centrifugal process or be vertically pressed. They shall possess self inverting sockets and shall comply with the requirements of and be tested in accordance with BS 5911:2002.

ISSUED FOR CONSTRUCTION	IMR	A.K.	12.01.23	C1
ISSUED FOR BUILDING CONTROL	IMR	A.K.	20.06.22	P3
STAGE 4A ISSUE	IMR	A.K.	09.12.21	P2
STAGE 4A ISSUE	IMR	A.K.	02.07.21	P1
Description	By	Aprvd.	Date	Rev.

ISSUED FOR CONSTRUCTION

Title: DRAINAGE DETAILS (SHEET 1 OF 4)

Project: KINGSTON WHARF SHOREHAM-BY-SEA

Client: PMC CONSTRUCTION

HOP
CONSULTING CIVIL AND STRUCTURAL ENGINEERS
HOP House, 41 Church Road
Hove, East Sussex BN3 2BE
www.hop.uk.com
ask@hop.uk.com
+44 (0)1273 223900

Drawing No. 12276-HOP-00-XX-DR-C-9200 Status S4 Rev. C1

© Copyright
1:20 0 0.2m 0.4m 0.6m 0.8m 1m
1:50 0 0.5m 1m 1.5m 2m 2.5m
1:100 0 1m 2m 3m 4m 5m

C:\1PROJECTS\12276 Kingston Wharf Btn Rd Shoreham Harbour\Drawings\Issue 07 - New Mixed Use Development\908*Civils\12276-07-Drainage Details Ivan Ramirez

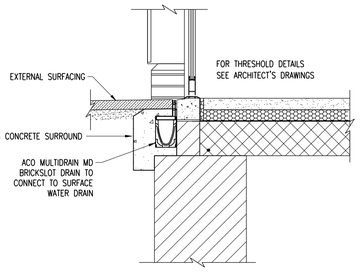

ACO BRICKSLOT DRAIN
(AT THRESHOLD)
(1:20)

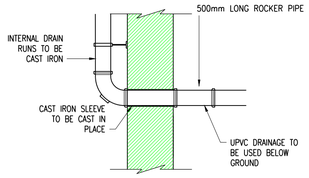

SVP/RWP CONNECTIONS THROUGH CONCRETE WALL
(1:20)

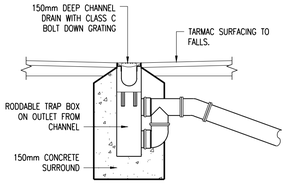

CHANNEL DRAIN OUTLET
(1:20)

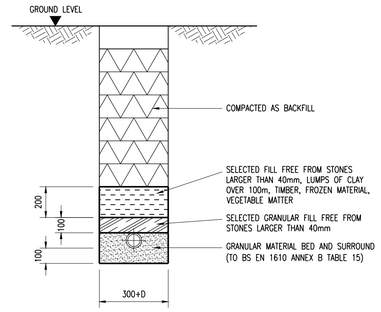

BEDDING FOR FLEXIBLE PIPES
(1:20)

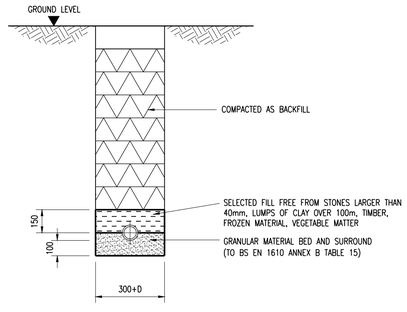

BEDDING FOR RIGID PIPES
(1:20)

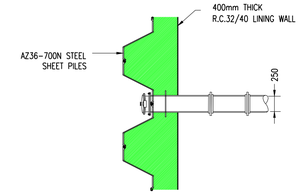

OUTFALLS AT CHAINAGE ≈300m
(250mm SURFACE WATER OUTFALL)
(1:20)

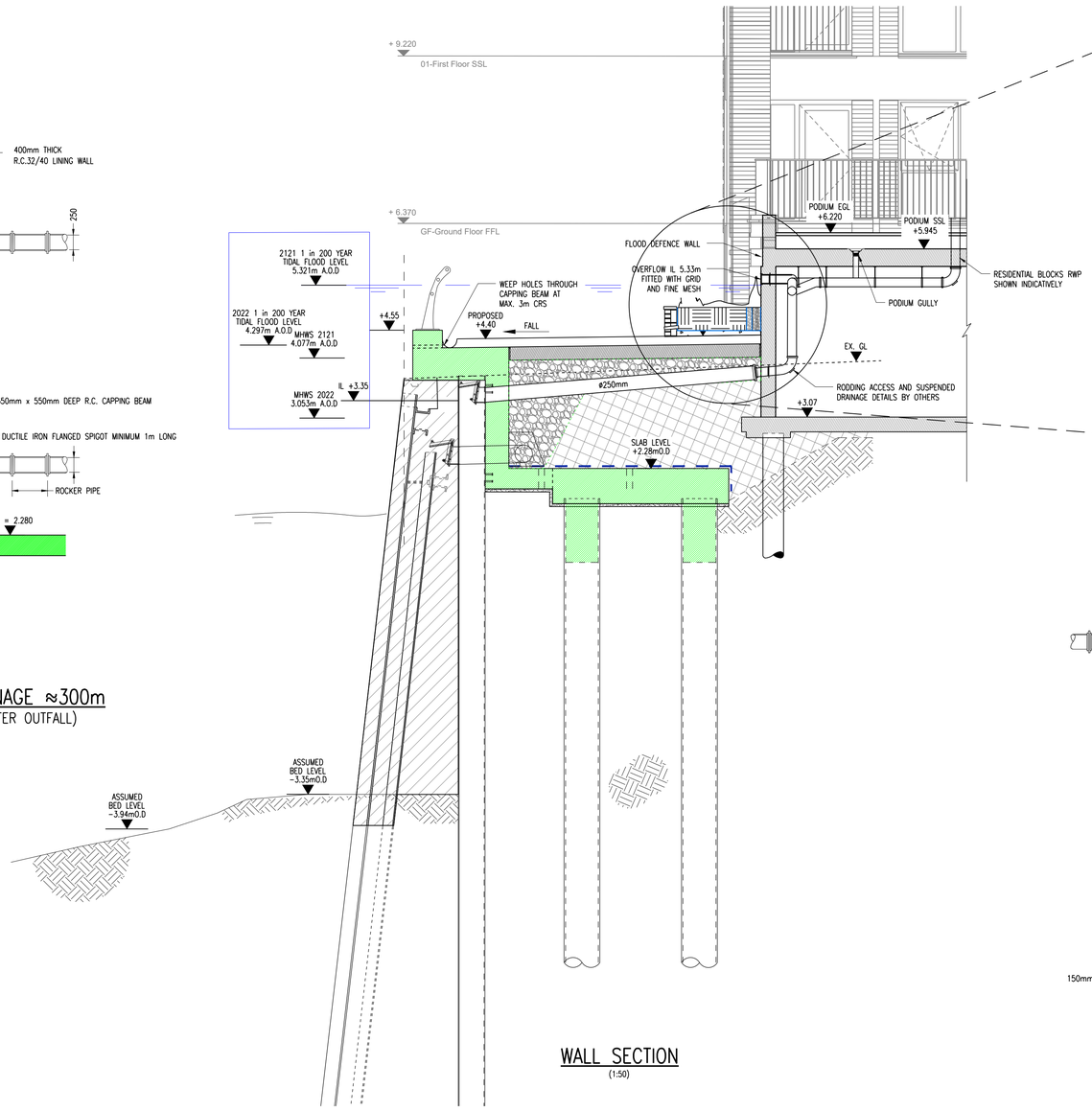

WALL SECTION
(1:50)

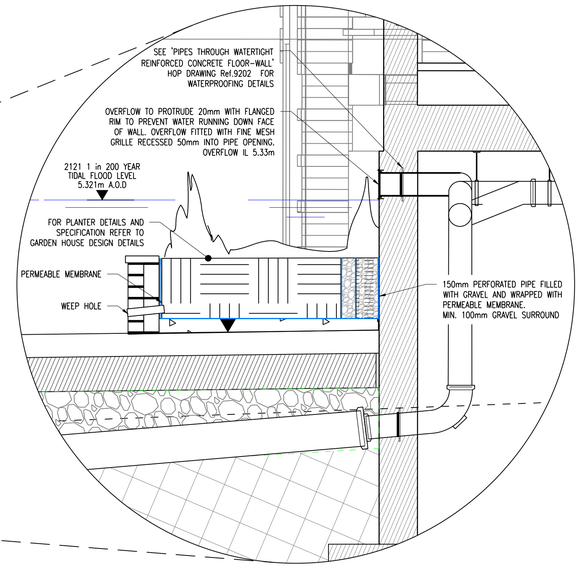

BOARDWALK OVERFLOW & PLANTER DETAIL
(1:20)

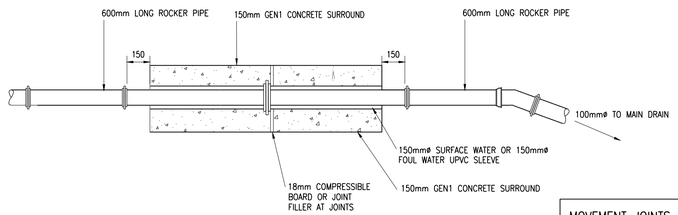

MOVEMENT JOINT FOR CONCRETE ENCASED PIPES
(1:20)

MOVEMENT JOINTS FORMED WITH COMPRESSIBLE BOARD TO BE PROVIDED AT EACH SOCKET OR SLEEVE JOINT FACE.

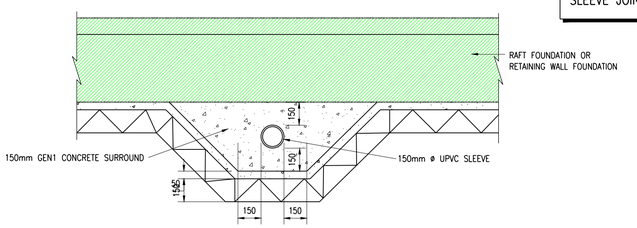

FOUL/SERVICE WATER CONNECTION TO MAIN DRAINAGE
(DETAIL TO BE USED FOR INCOMING SERVICE DUCTS)
(1:20)

Project/Task No. 12276 Scale: AS SHOWN ORIGINAL DRAWING SIZE A1

1. GENERAL
(i) This drawing is not to be scaled, work to figured dimensions only, confirmed on site.

(ii) This drawing is to be read in conjunction with all relevant architectural drawings, detailed specifications where applicable and all associated drawings in this series.

(iii) Any discrepancy on this drawing is to be reported immediately to the partnership for clarification.

(iv) The contractor is responsible for all temporary works and for the stability of the works in progress.

2. DRAINAGE GENERAL
(i) All foul and storm water drains which are not to be adopted as public sewers under a section 104 Agreement must be constructed in accordance with the Building Regulations, BS EN 752 and where appropriate the relevant agreement certificates.

(ii) Manholes, gullies, gully connections, sewers and other sewerage structures intended to convey surface water are to be constructed in accordance with the Water Authorities Association Specification 'Sewers for Adoption' 7th Edition and relevant Council Design Guide.

(iii) All concrete used in drainage works to comply with BRE Digest 363 for Class 2 sulphate conditions.

3. BELOW GROUND DRAINAGE
(i) Pipework to be UPVC-U pipes to BS 4660 : 2000 and Inspection Chambers to BS 7158 : 2001.

(ii) All adoptable drainage to be constructed in accordance with 'Sewers for Adoption' 7th Edition and the relevant Council Design Guide.

(iii) All private surface water sewers to be laid at 1 in 80 unless otherwise stated on the drawing.

(iv) All private foul water sewers to be laid at 1 in 40 at the head of pipe runs and 1 in 80 elsewhere unless otherwise stated.

(v) All private foul sewer pipes to be 100mm diameter unless otherwise stated on the drawing. All private surface water sewer pipes to be 100mm diameter from downpipes and 150mm diameter elsewhere unless otherwise stated on the drawing.

(vi) Allow for rodding access above ground where rainwater downpipes do not have a direct connection to an inspection chamber.

(vii) Existing sewer pipe to be re-used to be surveyed and levelled prior to commencement of the drainage works and refurbished if necessary.

(viii) Connections to an adopted sewer only to be made following approval from the relevant adopting Authority.

(ix) All drains, sewer pipes and manholes to be cleaned and tested for water tightness on completion of construction.

4. MANHOLE COVERS & FRAMES
(i) Manhole covers to be class D400 in highways, class B125 in footways and verges, class C250 in external maintenance vehicle access areas and verges, and class A15 in non-trafficked areas.

(ii) Manhole covers and frames to be bedded and surrounded in 1:3 mortar.

5. PIPES
(i) Plastic pipes shall be of unplasticised polyvinyl chloride (UPVC) complying with the requirements of BS EN 1401-1:2009.

(ii) Concrete pipes shall be spun by a centrifugal process or be vertically pressed. They shall possess self inverting sockets and shall comply with the requirements of and be tested in accordance with BS 5911:2002.

Description	By	Aprvd.	Date	Rev.
ISSUED FOR CONSTRUCTION	IMR	A.K.	12.01.23	C1
OVERFLOW DRAINAGE DETAIL UPDATED	IMR	A.K.	15.11.22	P5
OUTFALL AND RIVER SIDEWALK SECTION UPDATED	IMR	A.K.	01.07.22	P4
ISSUED FOR BUILDING CONTROL	IMR	A.K.	20.06.22	P3
STAGE 4A ISSUE	IMR	A.K.	09.12.21	P2
STAGE 4A ISSUE	IMR	A.K.	02.07.21	P1

ISSUED FOR CONSTRUCTION

Title: DRAINAGE DETAILS (SHEET 2 OF 4)

Project: KINGSTON WHARF SHOREHAM-BY-SEA

Client: PMC CONSTRUCTION

HOP
CONSULTING CIVIL AND STRUCTURAL ENGINEERS
HOP House, 41 Church Road
Hove, East Sussex BN3 2BE
www.hop.uk.com
ask@hop.uk.com
+44 (0)1273 223900

Drawing No. 12276-HOP-00-XX-DR-C-9201 Status S4 Rev. C1

© Copyright

1:20 0 0.2m 0.4m 0.6m 0.8m 1m
1:50 0 0.5m 1m 1.5m 2m 2.5m
1:100 0 1m 2m 3m 4m 5m

P:\PROJECTS\12276 Kingston Wharf Bin Rd Shoreham Harbour\Drawings\Cad 07 - New Mixed Use Development\HOP\Cad\s\12276-07-Drainage Details Ivan Rommez

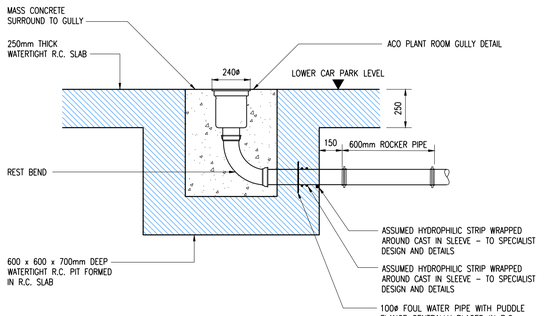

PLANT ROOM GULLY DETAIL
(TYPICAL DETAIL TO BE CONFIRMED BY M&E ENGINEER)
(1:20)

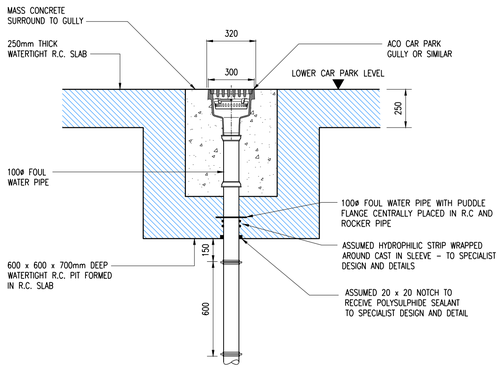

CAR PARK GULLY DETAIL
(LOCATED IN UNDERGROUND CAR PARK)
(1:20)

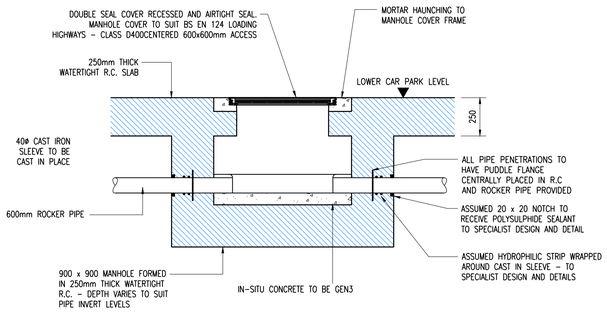

TYPICAL INTERNAL MANHOLE
(LOCATED IN UNDERGROUND CAR PARK)
(1:20)

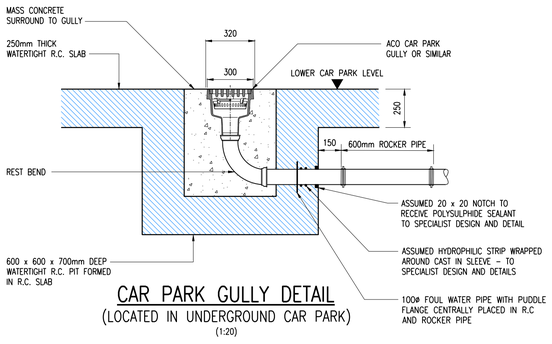

CAR PARK GULLY DETAIL
(LOCATED IN UNDERGROUND CAR PARK)
(1:20)

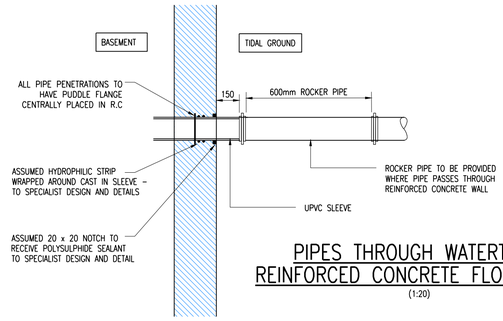

PIPES THROUGH WATERTIGHT REINFORCED CONCRETE FLOOR-WALL
(1:20)

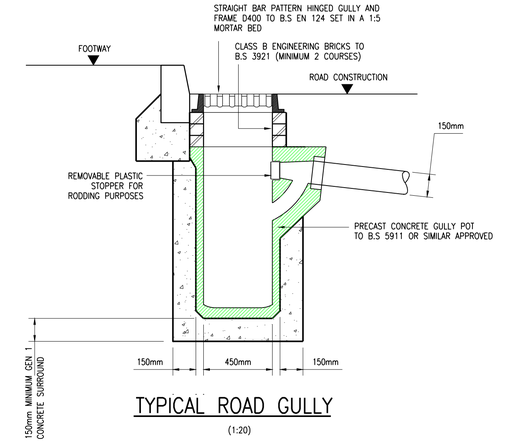

TYPICAL ROAD GULLY
(1:20)

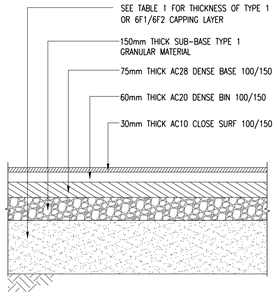

IMPERMEABLE TRAFFICKED ASPHALT CONCRETE SURFACING
(1:20)

TABLE 1: CAPPING	
CBR </= 1%	CONSIDER STABILISATION OF WEAK MATERIAL OR MIN 600mm CAPPING ON GEOTEXTILE + 150mm SUB-BASE
CBR </= 2%	600mm CAPPING, 150mm SUB-BASE, GEOTEXTILE BENEFICIAL
2% < CBR </= 2.5%	450mm CAPPING, 150mm SUB-BASE
2.5% < CBR </= 5%	350mm CAPPING, 150mm SUB-BASE OR 300mm SUB-BASE
5% < CBR </= 15%	225mm SUB-BASE
CBR > 15%	150mm SUB-BASE

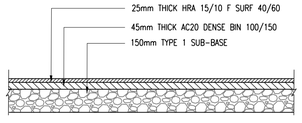

PRIVATE ASPHALT CONCRETE FOOTPATH
(1:20)

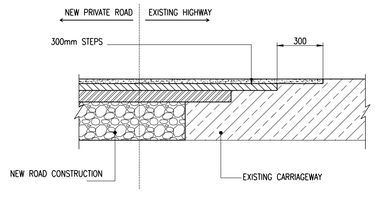

CARRIAGEWAY TIE-IN DETAIL
(1:20)

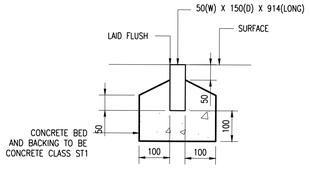

EDGING TYPE EF FLAT TOP
(1:10)

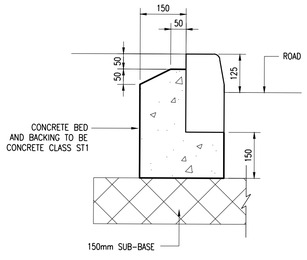

FULL HEIGHT KERB TYPE HB2
(1:10)

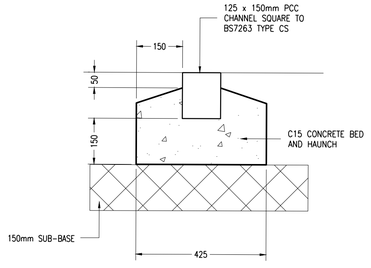

CHANNEL SQUARE KERB DETAIL
(1:10)

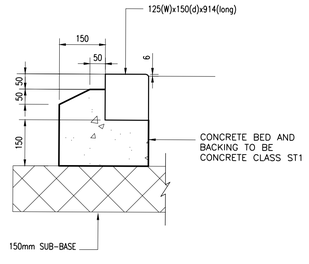

DROP KERB TYPE BN
(1:10)

1. GENERAL

(i) This drawing is not to be scaled, work to figured dimensions only, confirmed on site.

(ii) This drawing is to be read in conjunction with all relevant architectural drawings, detailed specifications where applicable and all associated drawings in this series.

(iii) Any discrepancy on this drawing is to be reported immediately to the partnership for clarification.

(iv) The contractor is responsible for all temporary works and for the stability of the works in progress.

2. DRAINAGE GENERAL

(i) All foul and storm water drains which are not to be adopted as public sewers under a section 104 Agreement must be constructed in accordance with the Building Regulations, BS EN 752 and where appropriate the relevant agreement certificates.

(ii) Manholes, gullies, gully connections, sewers and other sewerage structures intended to convey surface water are to be constructed in accordance with the Water Authorities Association Specification "Sewers for Adoption" 7th Edition and relevant Council Design Guide.

(iii) All concrete used in drainage works to comply with BRE Digest 363 for Class 2 sulphate conditions.

3. BELOW GROUND DRAINAGE

(i) Pipework to be UPVC-U pipes to BS 4660 : 2000 and Inspection Chambers to BS 7158 : 2001.

(ii) All adoptable drainage to be constructed in accordance with "Sewers for Adoption" 7th Edition and the relevant Council Design Guide.

(iii) All private surface water sewers to be laid at 1 in 80 unless otherwise stated on the drawing.

(iv) All private foul water sewers to be laid at 1 in 40 at the head of pipe runs and 1 in 80 elsewhere unless otherwise stated.

(v) All private foul sewer pipes to be 100mm diameter unless otherwise stated on the drawing. All private surface water sewer pipes to be 100mm diameter from downpipes and 150mm diameter elsewhere unless otherwise stated on the drawing.

(vi) Allow for rodding access above ground where rainwater downpipes do not have a direct connection to an inspection chamber.

(vii) Existing sewer pipe to be re-used to be surveyed and levelled prior to commencement of the drainage works and refurbished if necessary.

(viii) Connections to an adopted sewer only to be made following approval from the relevant adopting Authority.

(ix) All drains, sewer pipes and manholes to be cleaned and tested for water tightness on completion of construction.

4. MANHOLE COVERS & FRAMES

(i) Manhole covers to be class D400 in highways, class B125 in footways and verges, class C250 in external maintenance vehicle access areas and verges, and class A15 in non-trafficked areas.

(ii) Manhole covers and frames to be bedded and surrounded in 1:3 mortar.

5. PIPES

(i) Plastic pipes shall be of unplasticised polyvinyl chloride (UPVC) complying with the requirements of BS EN 1401-1:2009.

(ii) Concrete pipes shall be spun by a centrifugal process or be vertically pressed. They shall possess self inverting sockets and shall comply with the requirements of and be tested in accordance with BS 5911:2002.

Project/Task No.	12276	Scale:	AS SHOWN ORIGINAL DRAWING SIZE A1

Description	By	Aprvd.	Date	Rev.
ISSUED FOR CONSTRUCTION	IMR	A.K.	12.01.23	C1
ISSUED FOR BUILDING CONTROL	IMR	A.K.	20.06.22	P3
STAGE 4A ISSUE	IMR	A.K.	09.12.21	P2
STAGE 4A ISSUE	IMR	A.K.	02.07.21	P1

ISSUED FOR CONSTRUCTION

Title: DRAINAGE DETAILS (SHEET 3 OF 4)

Project: KINGSTON WHARF SHOREHAM-BY-SEA

Client: PMC CONSTRUCTION

HOP CONSULTING CIVIL AND STRUCTURAL ENGINEERS
HOP House, 41 Church Road
Hove, East Sussex BN3 2BE
www.hop.uk.com
ask@hop.uk.com
+44 (0)1273 223900

Drawing No. 12276-HOP-00-XX-DR-C-9202 Status S4 Rev. C1

© Copyright

C:\PROJECTS\12276 Kingston Wharf Btn Rd Shoreham Harbour\Drawings\Cad\ 01 - New Mixed Use Development\HOP\Cmds\12276-HOP-Drainage Details Ivan Rommez

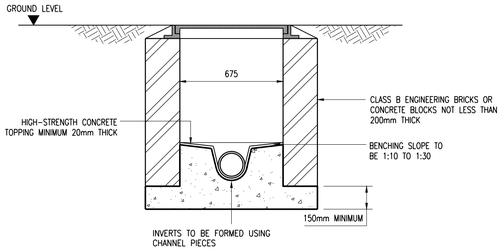

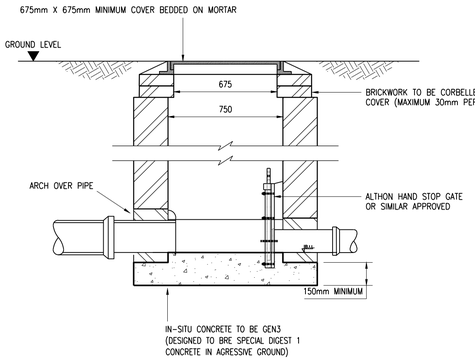

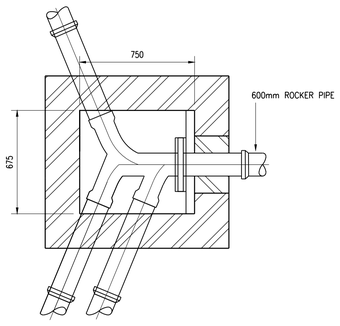

RECTANGULAR MANHOLE FITTED WITH SHUT OFF GATE
(1:20)

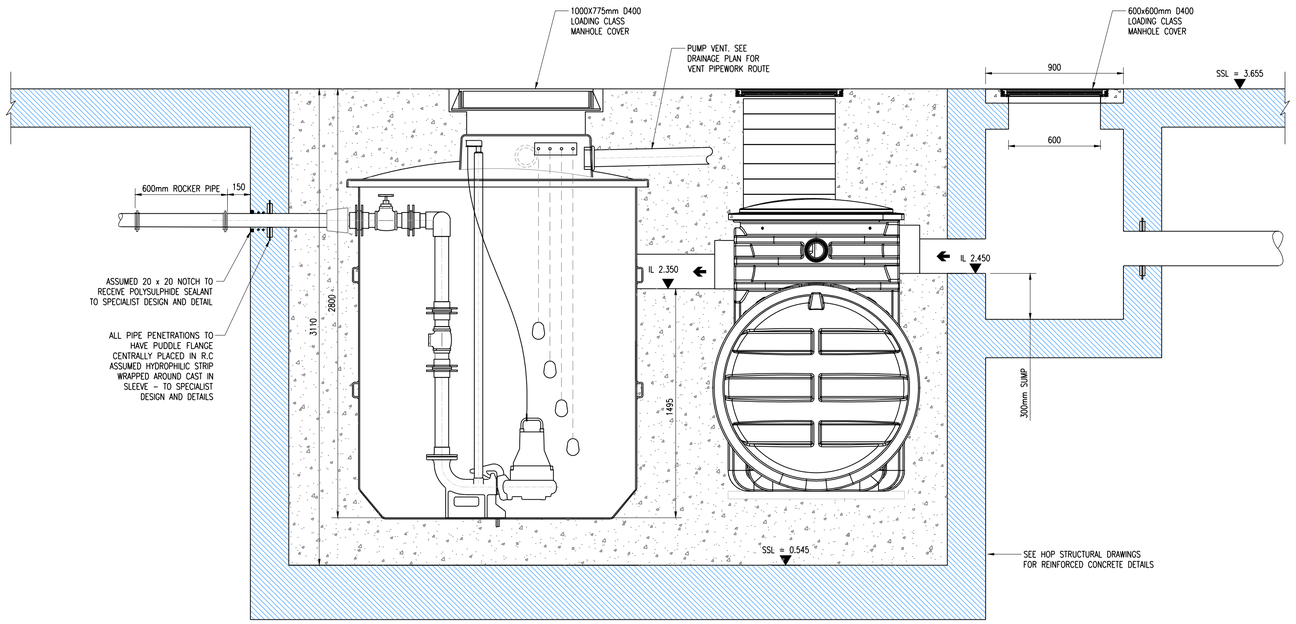

EXTERNAL CAR PARK ACCESS RAMP PUMP ARRANGEMENT
(REFER TO STRUCTURAL DRAWINGS FOR REINFORCED CONCRETE DETAILS)
(1:20)

PUMP DETAILS BASED ON WILLOW PUMPS
TYPICAL INSTALLATION DETAILS.
FINAL SPECIFICATIONS TO BE CONFIRMED.

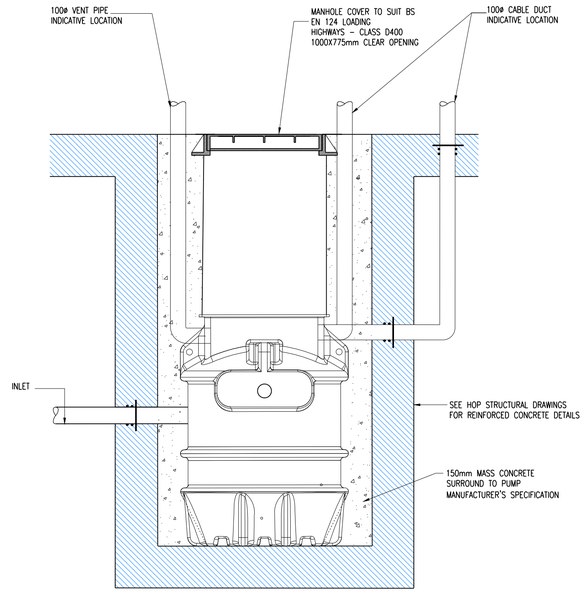

TYPICAL CAR PARK PUMP
(REFER TO STRUCTURAL DRAWINGS FOR REINFORCED CONCRETE DETAILS)
(1:20)

Project/Task No. 12276 Scale: AS SHOWN ORIGINAL DRAWING SIZE A1

1. GENERAL
(i) This drawing is not to be scaled, work to figured dimensions only, confirmed on site.

(ii) This drawing is to be read in conjunction with all relevant architectural drawings, detailed specifications where applicable and all associated drawings in this series.

(iii) Any discrepancy on this drawing is to be reported immediately to the partnership for clarification.

(iv) The contractor is responsible for all temporary works and for the stability of the works in progress.

2. DRAINAGE GENERAL
(i) All foul and storm water drains which are not to be adopted as public sewers under a section 104 Agreement must be constructed in accordance with the Building Regulations, BS EN 752 and where appropriate the relevant agreement certificates.

(ii) Manholes, gullies, gully connections, sewers and other sewerage structures intended to convey surface water are to be constructed in accordance with the Water Authorities Association Specification 'Sewers for Adoption' 7th Edition and relevant Council Design Guide.

(iii) All concrete used in drainage works to comply with BRE Digest 363 for Class 2 sulphate conditions.

3. BELOW GROUND DRAINAGE
(i) Pipework to be UPVC-U pipes to BS 4660 : 2000 and Inspection Chambers to BS 7158 : 2001.

(ii) All adoptable drainage to be constructed in accordance with 'Sewers for Adoption' 7th Edition and the relevant Council Design Guide.

(iii) All private surface water sewers to be laid at 1 in 80 unless otherwise stated on the drawing.

(iv) All private foul water sewers to be laid at 1 in 40 at the head of pipe runs and 1 in 80 elsewhere unless otherwise stated.

(v) All private foul sewer pipes to be 100mm diameter unless otherwise stated on the drawing. All private surface water sewer pipes to be 100mm diameter from downpipes and 150mm diameter elsewhere unless otherwise stated on the drawing.

(vi) Allow for rodding access above ground where rainwater downpipes do not have a direct connection to an inspection chamber.

(vii) Existing sewer pipe to be re-used to be surveyed and levelled prior to commencement of the drainage works and refurbished if necessary.

(viii) Connections to an adopted sewer only to be made following approval from the relevant adopting Authority.

(ix) All drains, sewer pipes and manholes to be cleaned and tested for water tightness on completion of construction.

4. MANHOLE COVERS & FRAMES
(i) Manhole covers to be class D400 in highways, class B125 in footways and verges, class C250 in external maintenance vehicle access areas and verges, and class A15 in non-trafficked areas.

(ii) Manhole covers and frames to be bedded and surrounded in 1:3 mortar.

5. PIPES
(i) Plastic pipes shall be of unplasticised polyvinyl chloride (UPVC) complying with the requirements of BS EN 1401-1:2009.

(ii) Concrete pipes shall be spun by a centrifugal process or be vertically pressed. They shall possess self inverting sockets and shall comply with the requirements of and be tested in accordance with BS 5911:2002.

ISSUED FOR CONSTRUCTION	IMR	A.K.	12.01.23	C1
ISSUED FOR BUILDING CONTROL	IMR	A.K.	20.06.22	P2
STAGE 4A ISSUE	IMR	A.K.	02.07.21	P1
Description	By	Aprvd.	Date	Rev.

ISSUED FOR CONSTRUCTION

Title: DRAINAGE DETAILS (SHEET 4 OF 4)

Project: KINGSTON WHARF SHOREHAM-BY-SEA

Client: PMC CONSTRUCTION

HOP
CONSULTING CIVIL AND STRUCTURAL ENGINEERS
HOP House, 41 Church Road
Hove, East Sussex BN3 2BE
www.hop.uk.com
ask@hop.uk.com
+44 (0)1273 223900

Drawing No. 12276-HOP-00-XX-DR-C-9203 Status S4 Rev. C1

© Copyright

1:20 0 0.2m 0.4m 0.6m 0.8m 1m
1:50 0 0.5m 1m 1.5m 2m 2.5m
1:100 0 1m 2m 3m 4m 5m

P:\PROJECTS\12276 Kingston Wharf Bath Rd Shoreham Harbour\Drawings\Vols 00 - New Mixed Use Development\HOP\Cells\12276-00-Drainage Details Ivan Ramirez

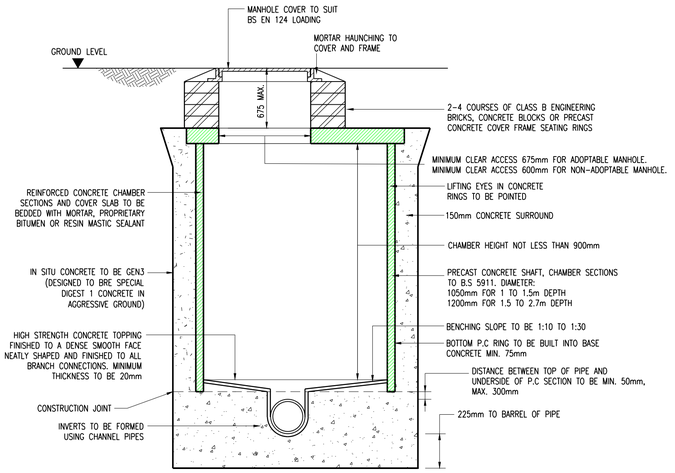

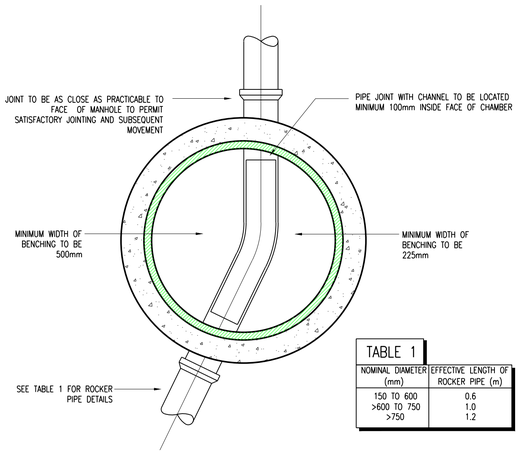

TABLE 1	
NOMINAL DIAMETER (mm)	EFFECTIVE LENGTH OF ROCKER PIPE (m)
150 TO 600	0.6
>600 TO 750	1.0
>750	1.2

PC MANHOLE TYPE B
(DEPTH FROM COVER LEVEL TO SOFFIT OF PIPE LESS THAN 3.0m)
(1:20)

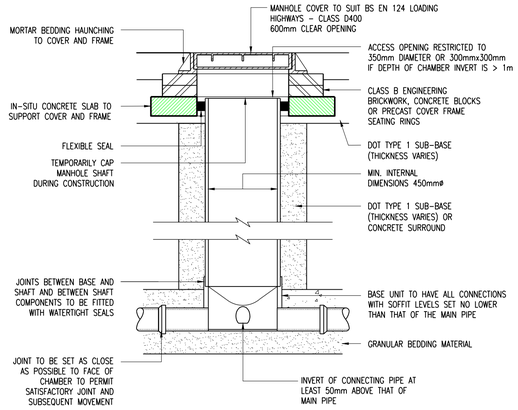

ALTERNATIVE BASE INVERT LAYOUTS
ALL CONNECTIONS TO BE MIN. SOFFIT TO SOFFIT

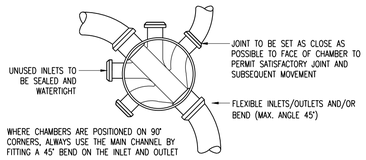

TYPE 3 ACCESS CHAMBER - FLEXIBLE MATERIAL
(SUBJECT TO VEHICLE LOADING, MAX. DEPTH 3m, NON-ENTRY)
(1:20)

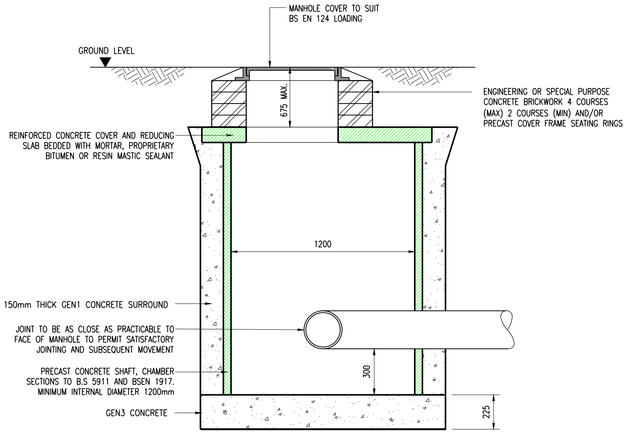

CATCHPIT TO INVERT 0.9m TO 2.7m.
(1:20)

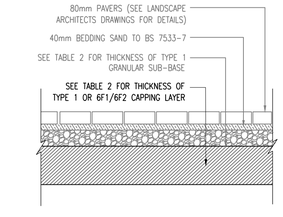

TABLE 2: CAPPING	
CBR </= 1%	CONSIDER STABILISATION OF WEAK MATERIAL OR MIN 600mm CAPPING ON GEOTEXTILE + 150mm SUB-BASE
CBR </= 2%	600mm CAPPING, 150mm SUB-BASE. GEOTEXTILE BENEFICIAL
2% < CBR </= 2.5%	450mm CAPPING, 150mm SUB-BASE
2.5% < CBR </= 5%	350mm CAPPING, 150mm SUB-BASE OR 300mm SUB-BASE
5% < CBR </= 15%	225mm SUB-BASE
CBR > 15%	150mm SUB-BASE

LIGHT TRAFFICKED BLOCK PAVING
(1:20)

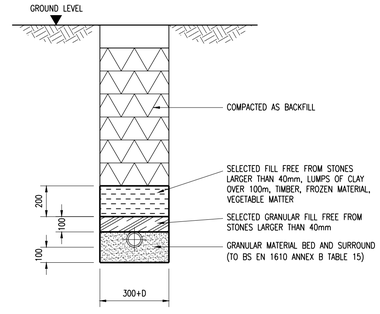

BEDDING FOR FLEXIBLE PIPES
(1:20)

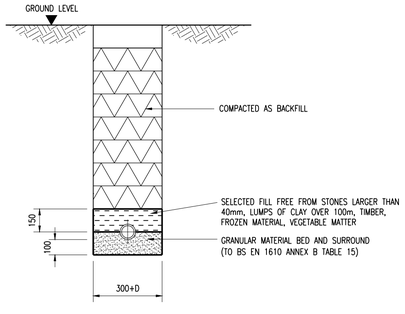

BEDDING FOR RIGID PIPES
(1:20)

Project/Task No. 12276 Scale: AS SHOWN ORIGINAL DRAWING SIZE A1

1. GENERAL

(i) This drawing is not to be scaled, work to figured dimensions only, confirmed on site.

(ii) This drawing is to be read in conjunction with all relevant architectural drawings, detailed specifications where applicable and all associated drawings in this series.

(iii) Any discrepancy on this drawing is to be reported immediately to the partnership for clarification.

(iv) The contractor is responsible for all temporary works and for the stability of the works in progress.

Description	By	Aprvd.	Date	Rev.
ISSUED FOR CONSTRUCTION	IMR	A.K.	12.01.23	C1
CONTRACT ISSUE	IMR	A.K.	07.10.22	P1

ISSUED FOR CONSTRUCTION

Title: DRAINAGE DETAILS SHEET 1 OF 2

Project: KINGSTON WHARF SHOREHAM-BY-SEA

Client: PMC

HOP
CONSULTING CIVIL AND STRUCTURAL ENGINEERS
HOP House, 41 Church Road
Hove, East Sussex BN3 2BE
www.hop.uk.com
ask@hop.uk.com
+44 (0)1273 223900

Drawing No. 12276-HOP-00-XX-DR-C-9250 Status S4 Rev. C1

© Copyright

1:20 0 0.2m 0.4m 0.6m 0.8m 1m
1:50 0 0.5m 1m 1.5m 2m 2.5m
1:100 0 1m 2m 3m 4m 5m

C:\PROJECTS\12276 Kingston Wharf Btn Rd Shoreham Harbour\Drawings\Issue 07 - New Mixed Use Development\HOP\Civils\12276-07-Drainage Details Ivan Ramirez

ARCH ASSOCIATES

APPENDIX 2

As Built Survey Information

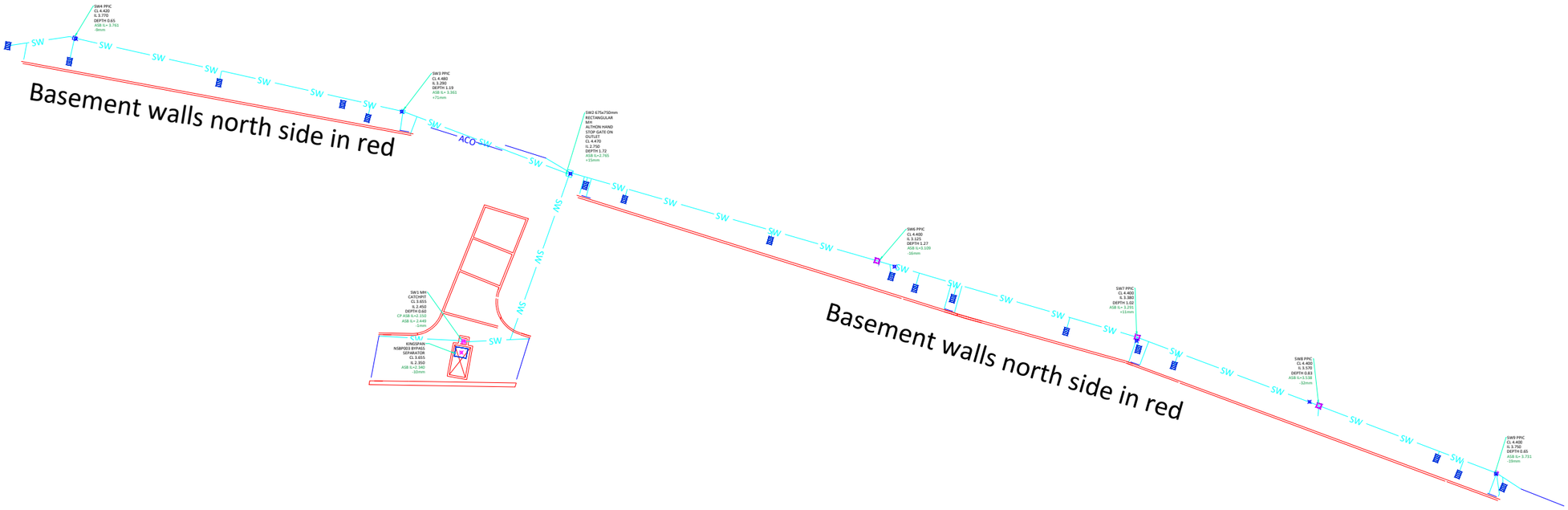

NOTES

REVISION

BLANCHARD WELLS	Blanchard Wells Ltd The Meadows Forester road Soberton heath SO32 3QG	JOB TITLE Kingston Wharf	DRAWING TITLE Kingston Wharf surface water drainage ASB	JOB No J733	CHECKED BY AND DATE	DRAWN BY AND DATE Josh Young 01.05.25	DRAWING NUMBER DRG 10

Block A/B ramp drainage

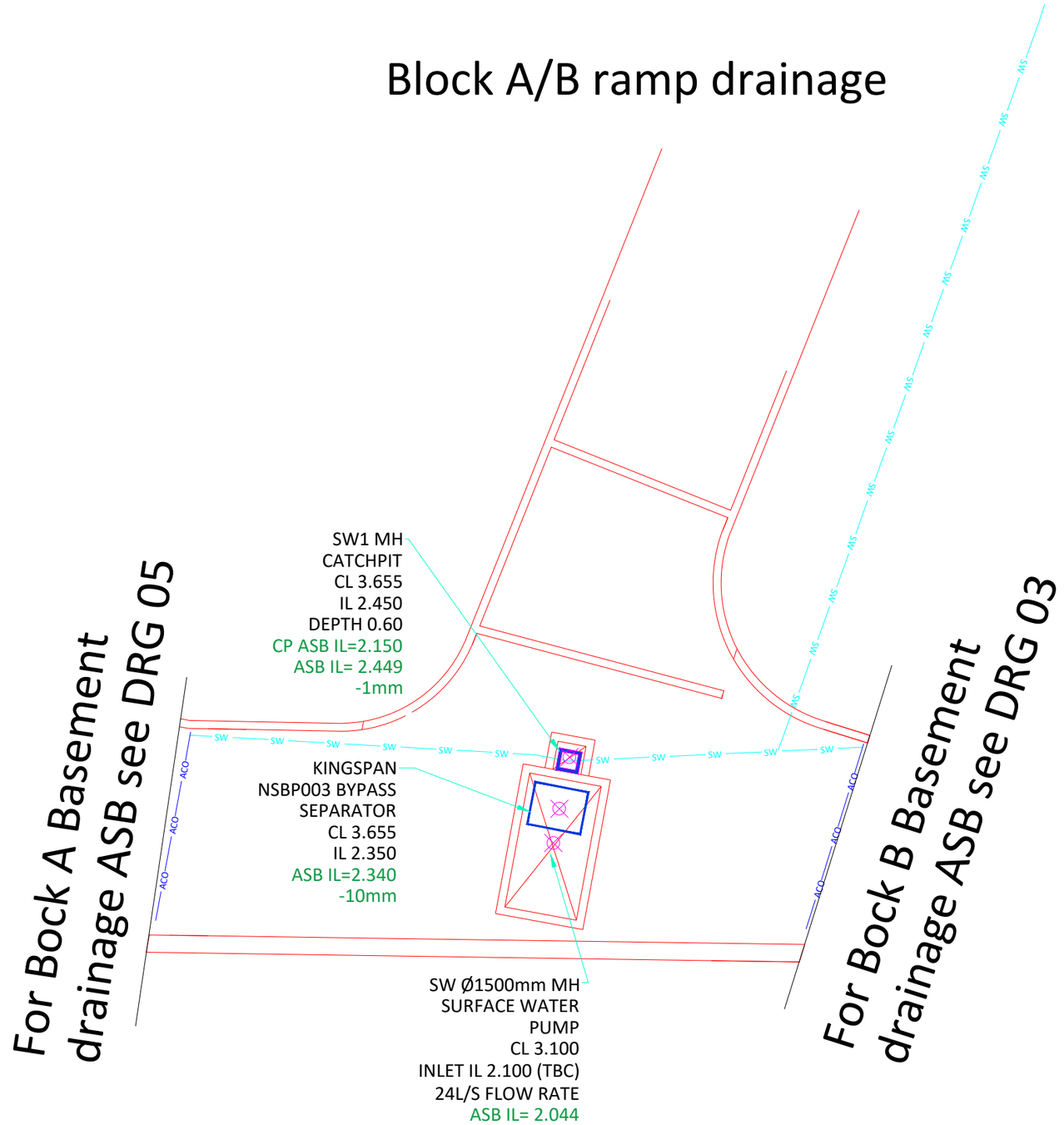

NOTES

REVISION

BLANCHARD WELLS

Blanchard Wells Ltd
The Meadows
Forester road
Soberton heath
SO32 3QG

JOB TITLE: Kingston Wharf

DRAWING TITLE: Kingston Wharf A/B Ramp drainage ASB

JOB No: J733

CHECKED BY AND DATE:

DRAWN BY AND DATE: Josh Young 01.05.25

DRAWING NUMBER: DRG 04

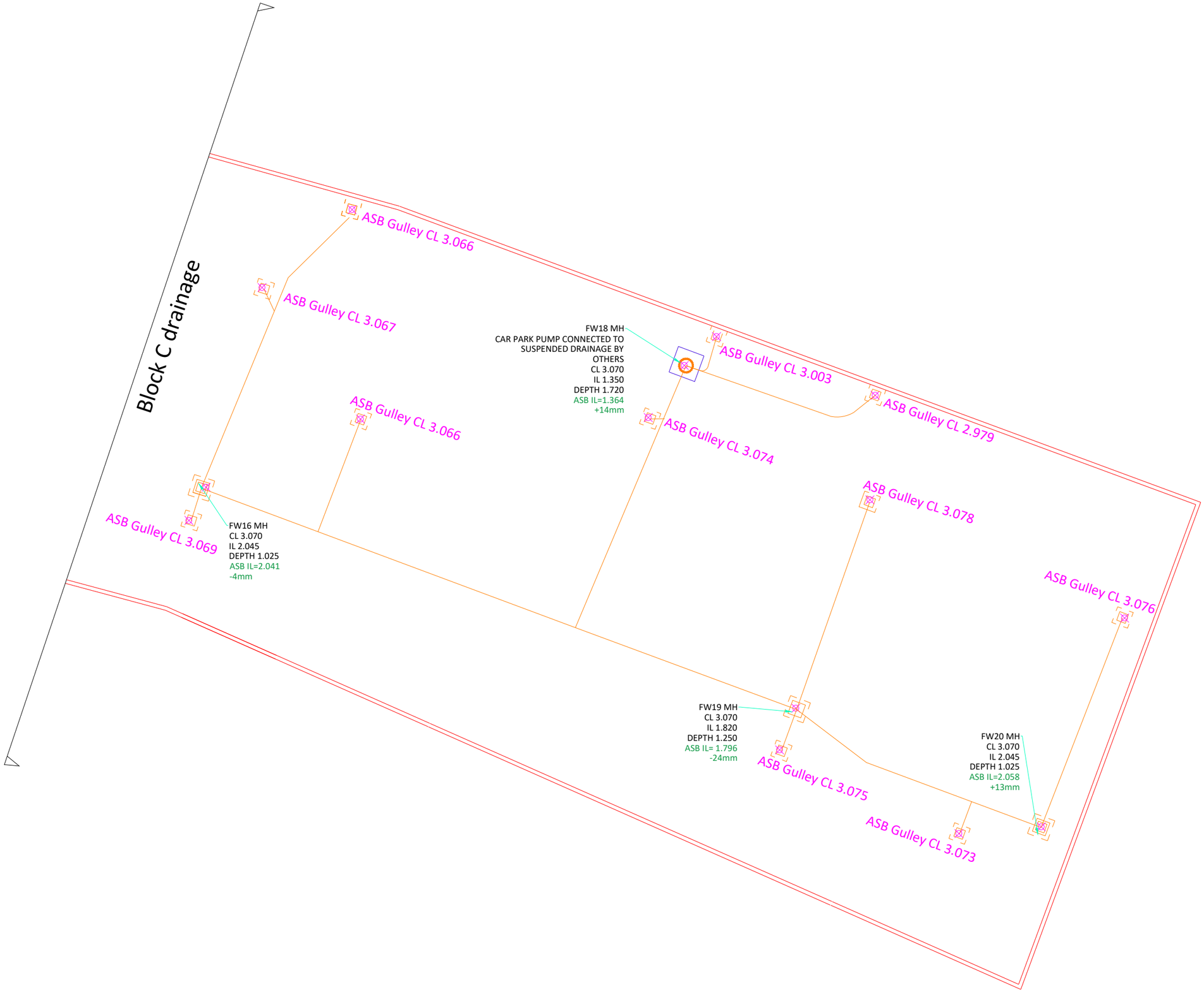

NOTES

REVISION

BLANCHARD WELLS	Blanchard Wells Ltd The Meadows Forester road Soberton heath SO32 3QG	JOB TITLE Kingston Wharf	DRAWING TITLE Kingston Wharf Block C basement drainage ASB	JOB No J733	CHECKED BY AND DATE	DRAWN BY AND DATE Josh Young 01.05.25	DRAWING NUMBER DRG 02

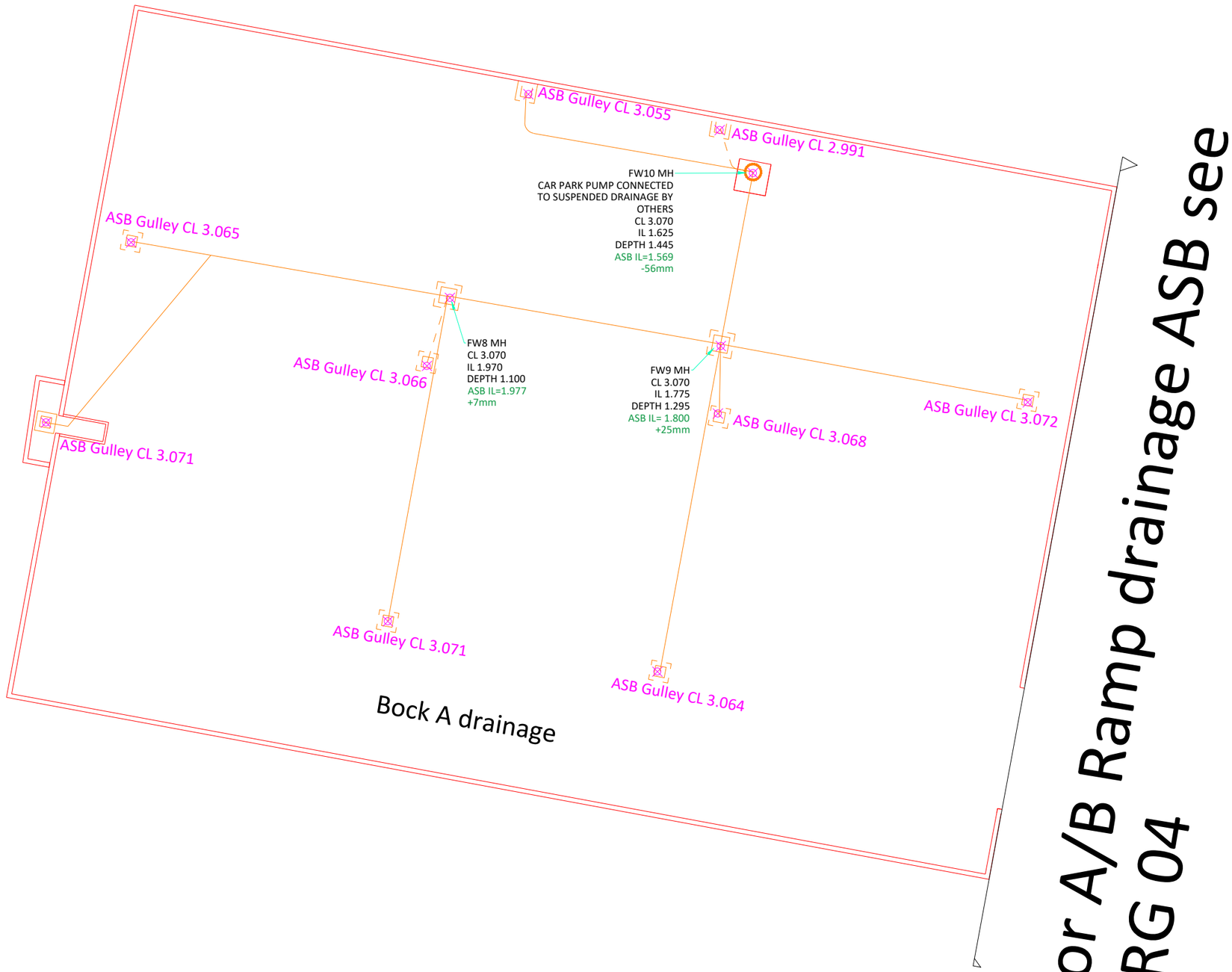

NOTES

REVISION

BLANCHARD WELLS	Blanchard Wells Ltd The Meadows Forester road Soberton heath SO32 3QG	JOB TITLE Kingston Wharf	DRAWING TITLE Kingston Wharf Block A Basement drainage ASB	JOB No J733	CHECKED BY AND DATE	DRAWN BY AND DATE Josh Young 01.05.25	DRAWING NUMBER DRG 05

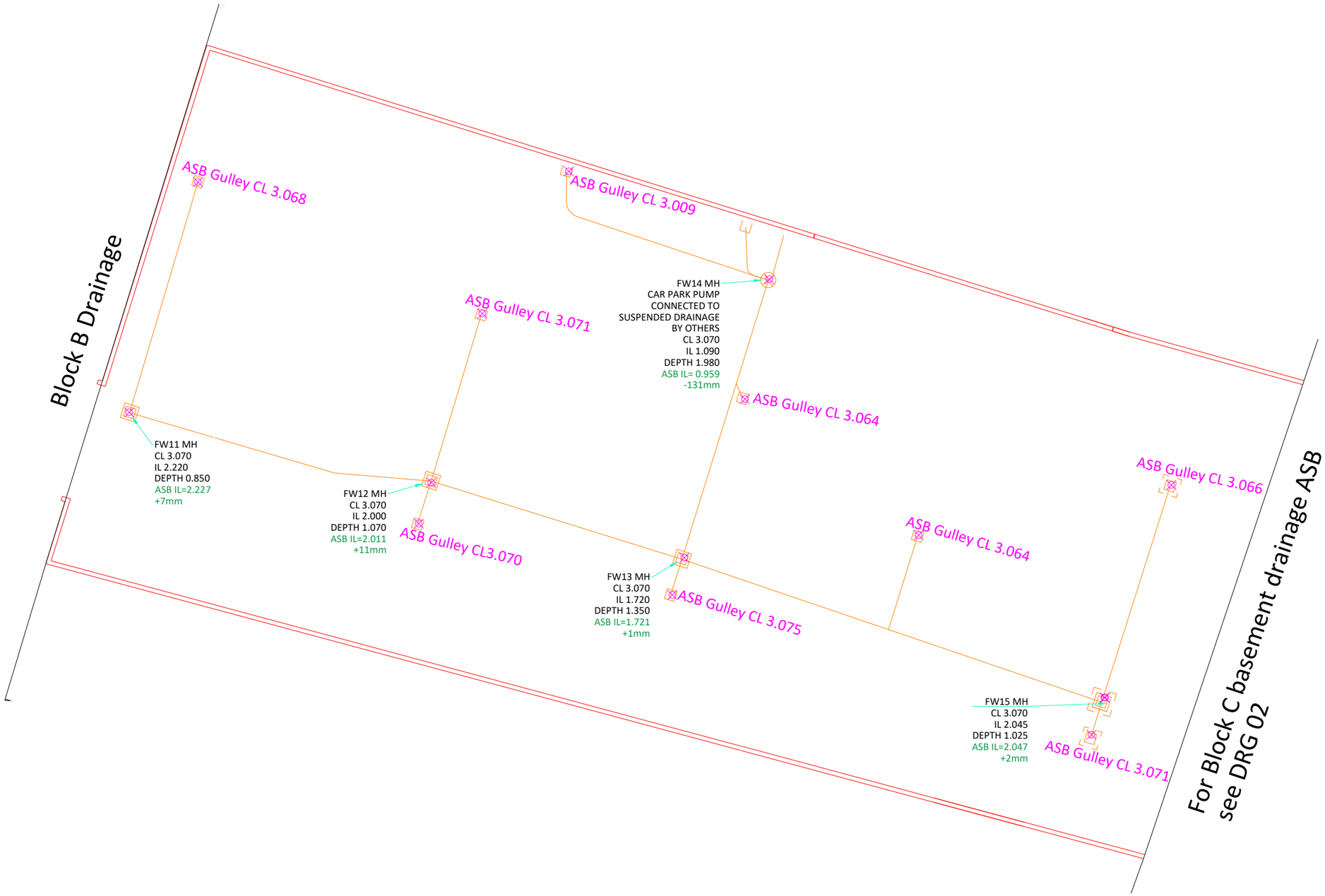

NOTES

REVISION

BLANCHARD WELLS	Blanchard Wells Ltd The Meadows Forester road Soberton heath SO32 3QG	JOB TITLE Kingston Wharf	DRAWING TITLE Kingston Wharf Block B basement drainage ASB	JOB No J733	CHECKED BY AND DATE	DRAWN BY AND DATE Josh Young 01.05.25	DRAWING NUMBER DRG 03

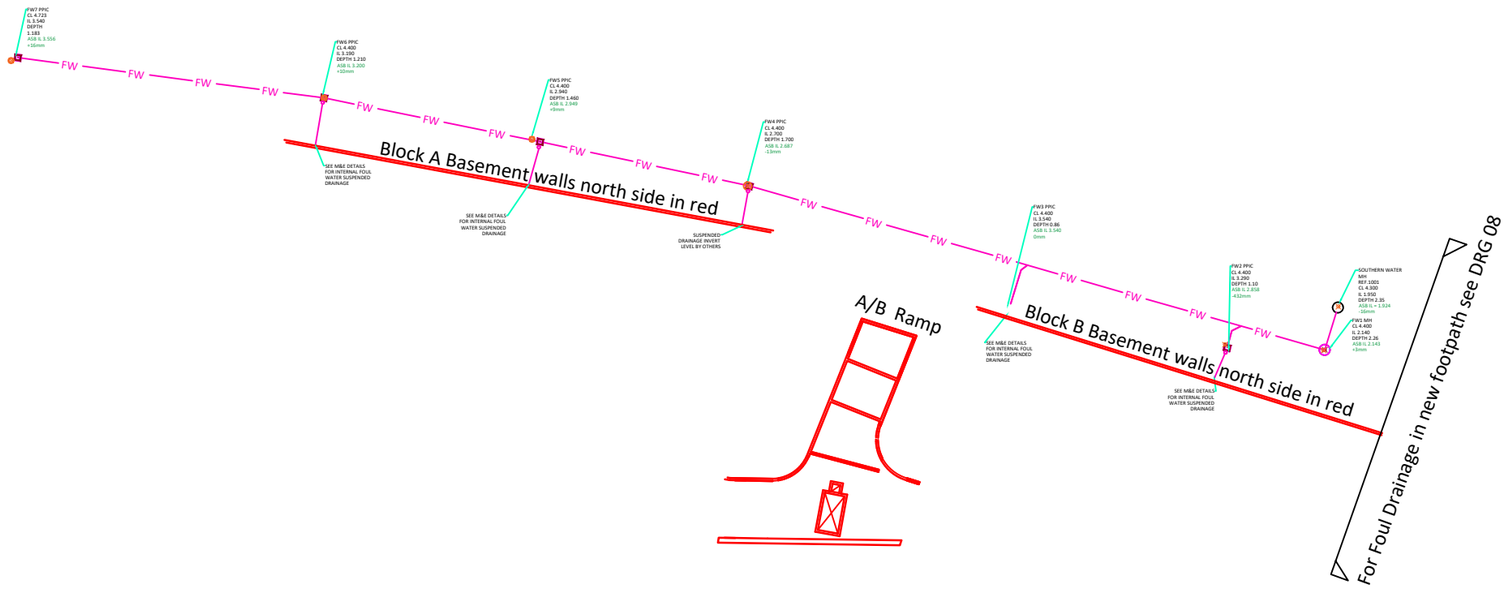

NOTES

REVISION

BLANCHARD WELLS	Blanchard Wells Ltd The Meadows Forester road Soberton heath SO32 3QG	JOB TITLE Kingston Wharf	DRAWING TITLE Kingston Wharf foul drainage drainage sheet 2 of 2 ASB	JOB No J733	CHECKED BY AND DATE	DRAWN BY AND DATE Josh Young 01.05.25 / DRAWING NUMBER DRG 09

Foul drainage in new footpath continued on DRG 09

FW24 PPIC
CL 4.400
IL 3.140
DEPTH 1.26
ASB IL 3.133
-7mm

EXISTING SOUTHERN WATER MH
REF.2001
CL 4.170
IL 2.150 ASSUMED BASED ON
EXISTING 150mmØ PIPE RUNNING
AT 1:150
ASB IL= 2.221

FW23 MH
CL 4.400
IL 2.700 REQUIRED
IL 2.190 EXISTING FROM
SUBSIGHT SURVEY DATED
JAN'17
DEPTH 1.4
To be re-surveyed when
pumped out

FW22 PPIC
CL 4.400
IL 3.300
DEPTH 1.100
ASB IL 3.275
-25mm

FW21 PPIC
CL 4.400
IL 3.550
DEPTH 0.85
ASB IL 3.581
+31mm

SEE M&E DETAILS
FOR INTERNAL FOUL
WATER SUSPENDED
DRAINAGE

SUSPENDED DRAINAGE
INVERT LEVEL BY
OTHERS

SUSPENDED DRAINAGE
INVERT LEVEL BY
OTHERS

SUSPENDED DRAINAGE
INVERT LEVEL BY
OTHERS

Block B/C - C basement walls north in red

NOTES

REVISION

BLANCHARD WELLS	Blanchard Wells Ltd The Meadows Forester road Soberton heath SO32 3QG	JOB TITLE Kingston Wharf	DRAWING TITLE Kingston Wharf foul drainage drainage sheet 1 of 2 ASB	JOB No J733	CHECKED BY AND DATE	DRAWN BY AND DATE Josh Young 01.05.25	DRAWING NUMBER DRG 08

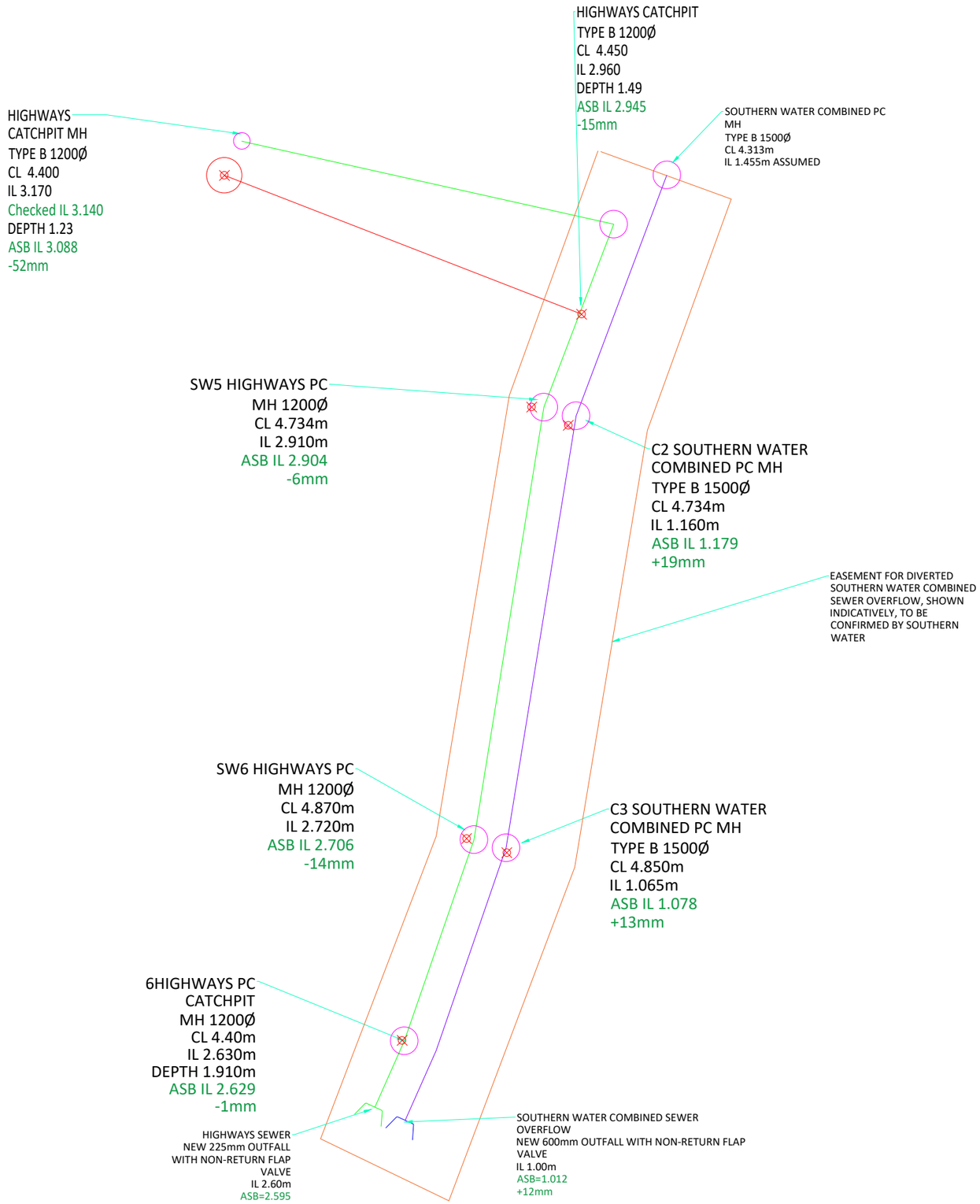

NOTES

REVISION

BLANCHARD WELLS

Blanchard Wells Ltd
The Meadows
Forester road
Soberton heath
SO32 3QG

JOB TITLE	DRAWING TITLE	JOB No	CHECKED BY AND DATE	DRAWN BY AND DATE	DRAWING NUMBER
Kingston Wharf	Kingston Wharf Highways drainage ASB	J733		Josh Young 01.05.25	DRG 06

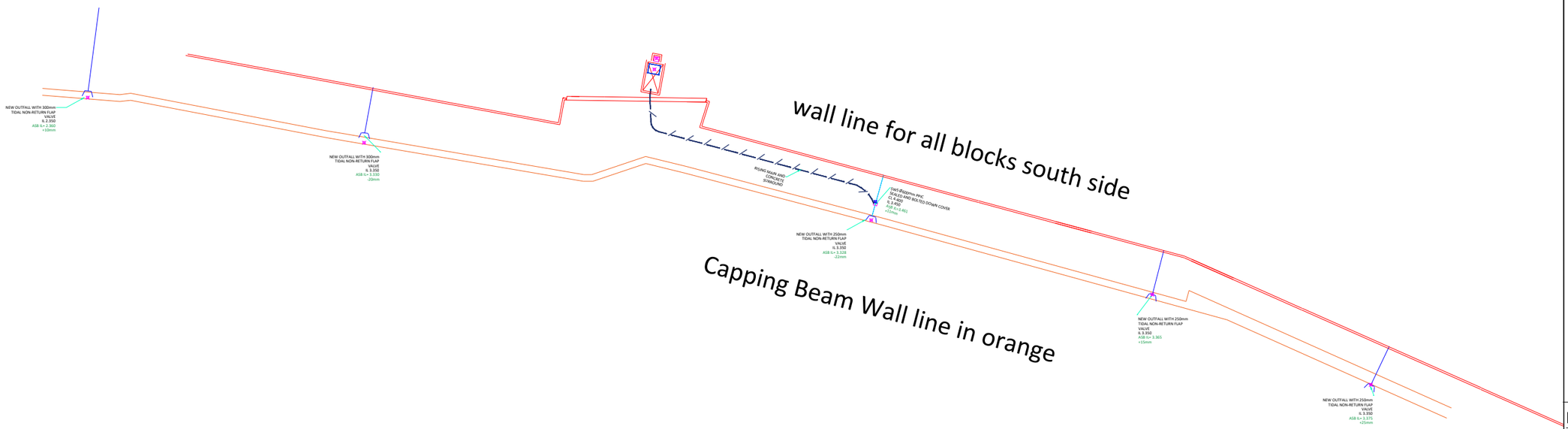

NOTES

REVISION

BLANCHARD WELLS	Blanchard Wells Ltd The Meadows Forester road Soberton heath SO32 3QG	JOB TITLE Kingston Wharf	DRAWING TITLE Kingston Wharf outfall drainage ASB	JOB No J733	CHECKED BY AND DATE	DRAWN BY AND DATE Josh Young 01.05.25	DRAWING NUMBER DRG 07

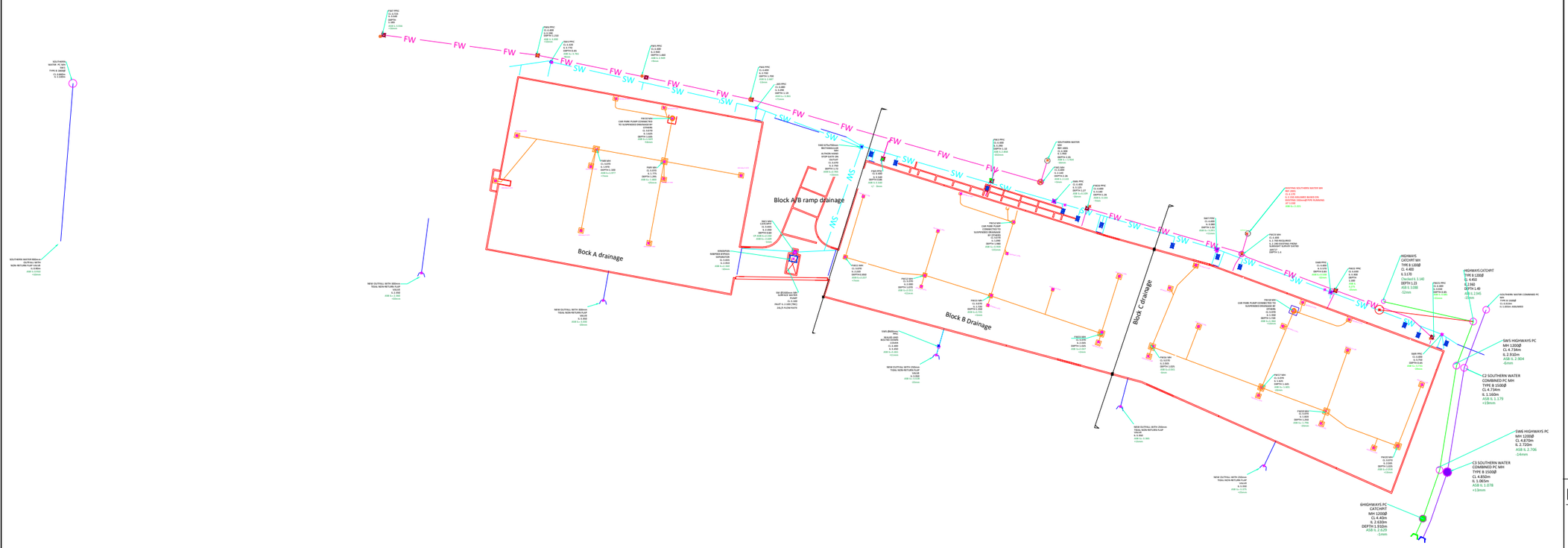

NOTES

REVISION

BLANCHARD WELLS	Blanchard Wells Ltd The Meadows Forester road Soberton heath SO32 3QG	JOB TITLE Kingston Wharf	DRAWING TITLE Kingston Wharf site wide drainage ASB	JOB No J733	CHECKED BY AND DATE	DRAWN BY AND DATE Josh Young 01.05.25	DRAWING NUMBER DRG 01