C735-2

C1 SfB
(31) Xn6

PROFILE22

SPECIFICATION GUIDE

ADUR & WORTHING
SERVICES
AWDM/ 0879/13
DATE VALID 26 JUL 2013

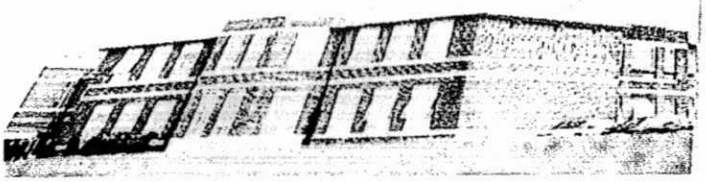

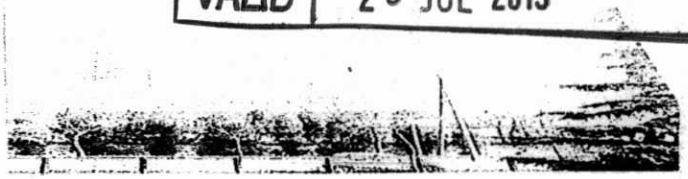

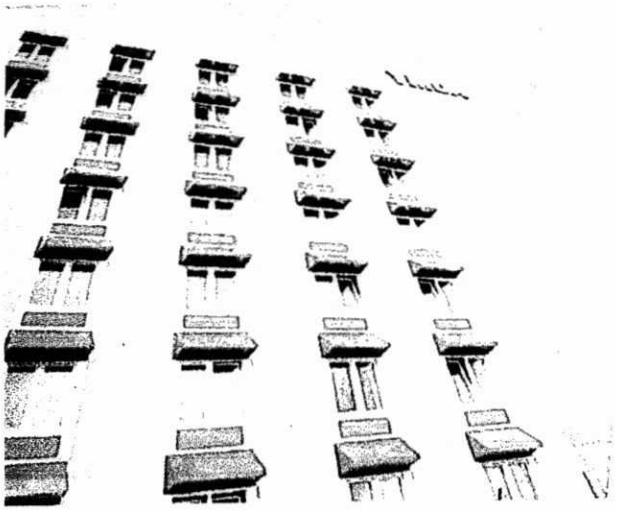

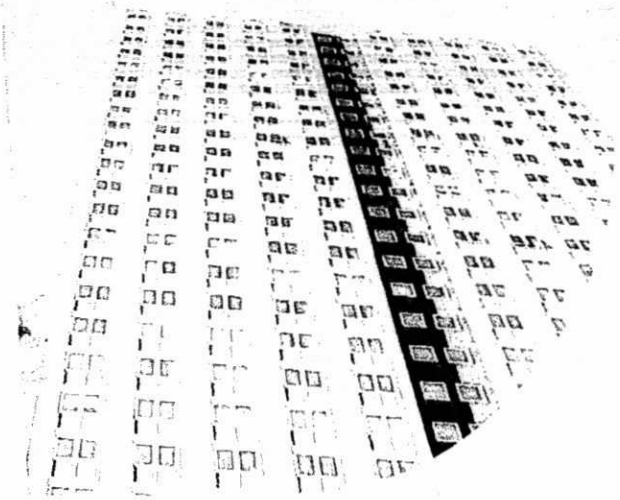

ISSUE 7

PVC-U WINDOW AND DOOR SYSTEMS

Fully Chamfered 60mm

ASSEMBLY OVERVIEW

- Open Out Window
- Fully Chamfered 60mm
- Fully Chamfered
- 28mm Double Glazing
- Internally Glazed
  Scotia Bead
- Bubblex Gasket

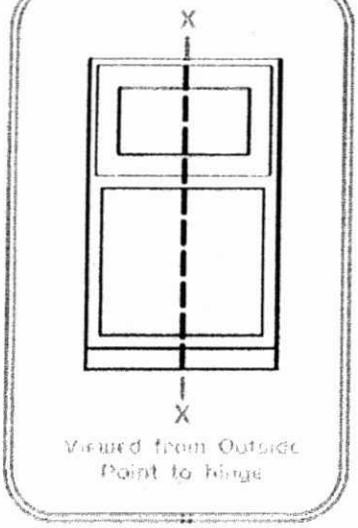

*'Note:
All reinforcements shown are for diagramatical purposes only.
For applications, please refer to the PROFILE 22 Product/Technical Manual.

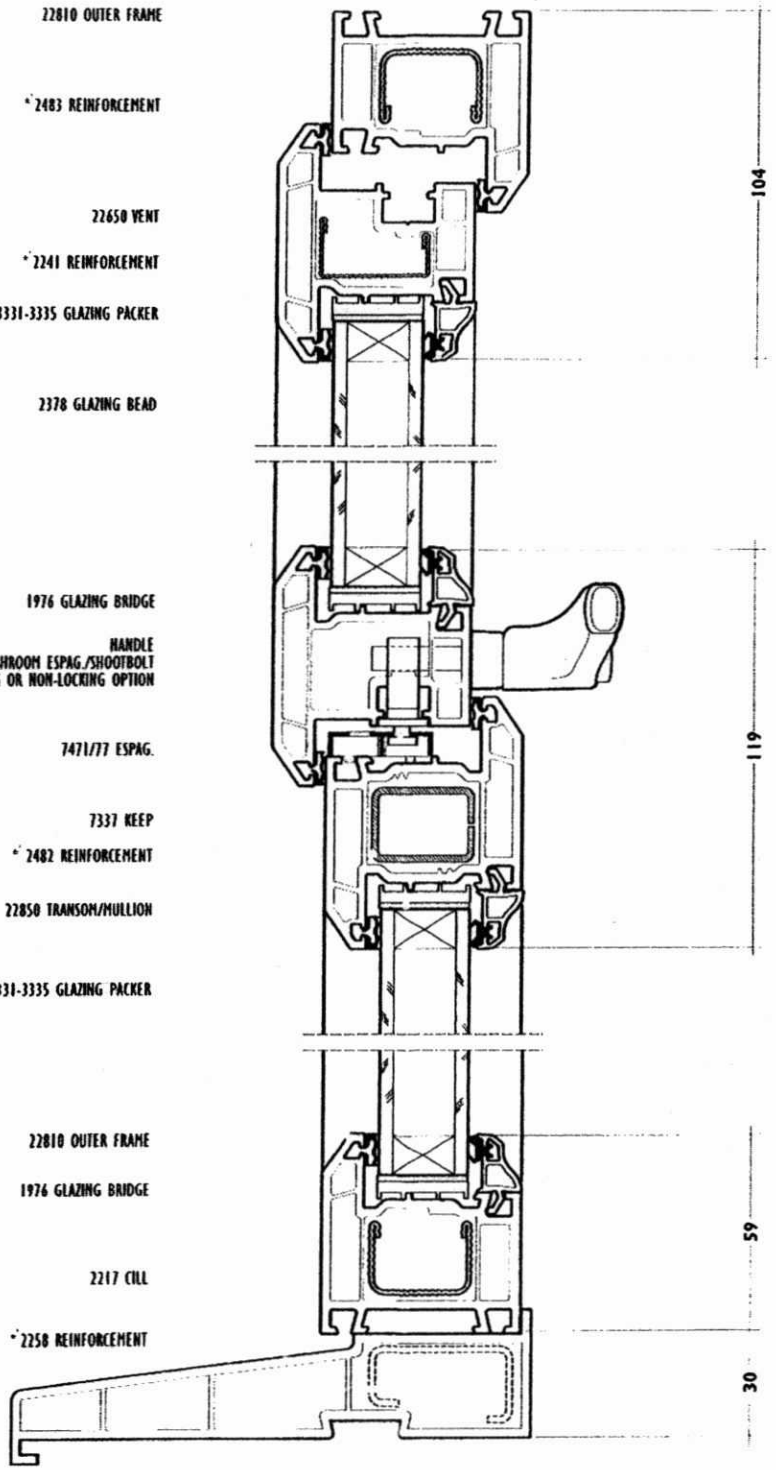

In-Line Patio Door System

86mm Outer Frame, 28mm Double Glazing

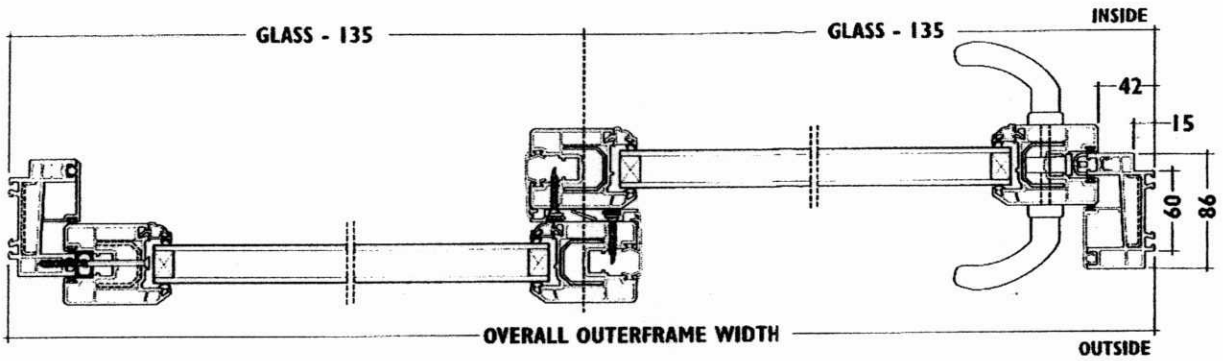

EQUAL GLASS WIDTH $= \frac{W - 270}{2}$

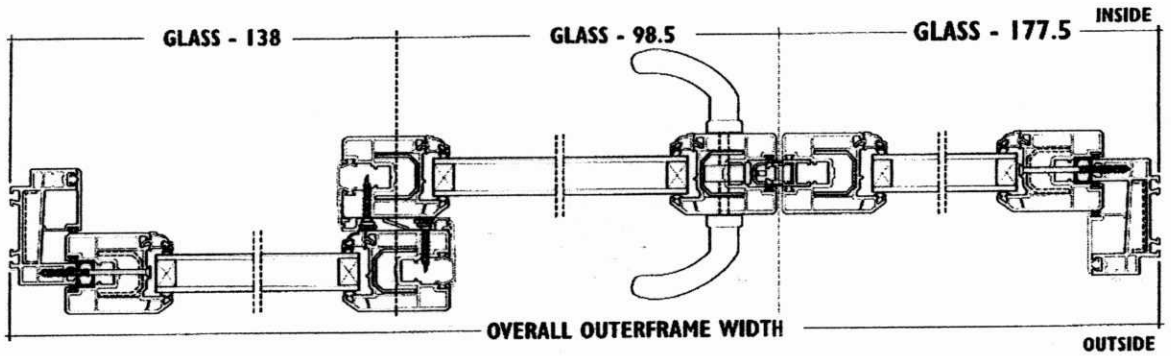

EQUAL GLASS WIDTH $= \frac{W - 414}{3}$

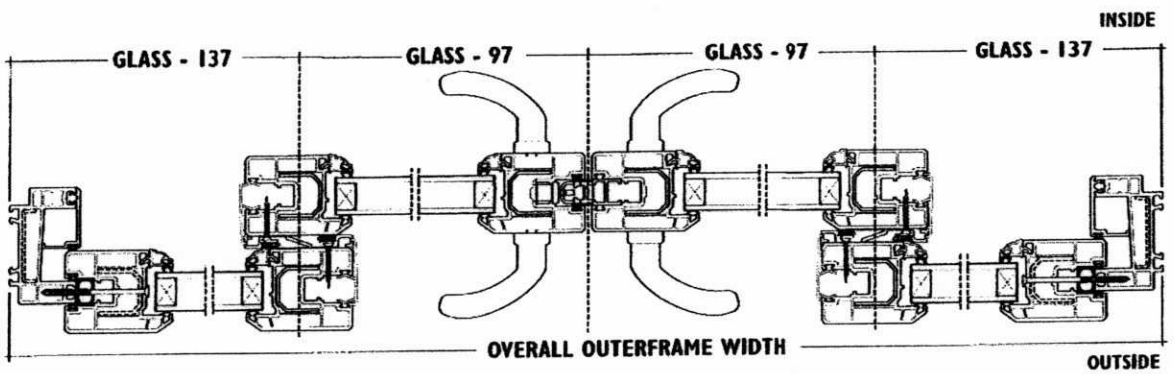

EQUAL GLASS WIDTH $= \frac{W - 468}{4}$