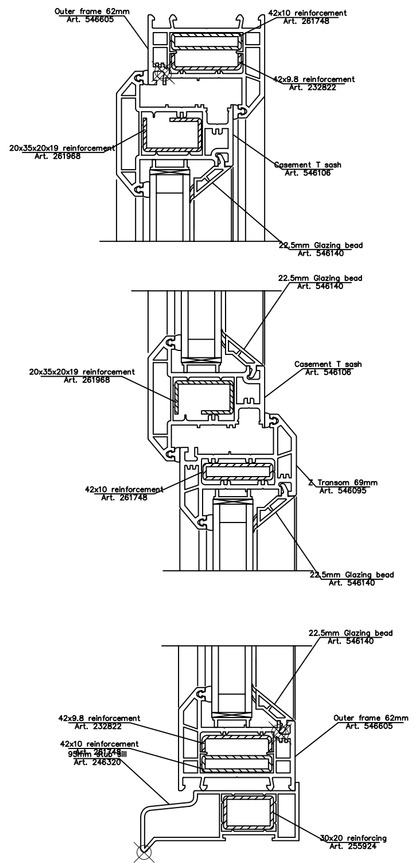

Detail of casement window

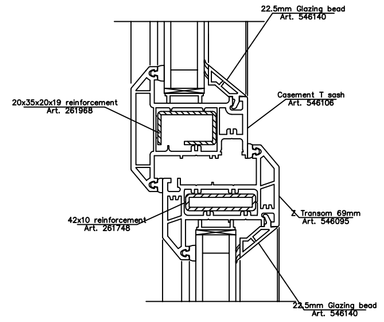

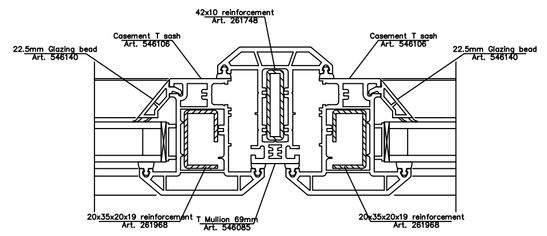

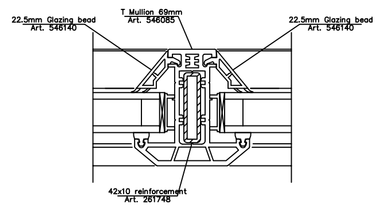

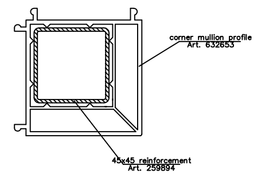

Detail of sash window

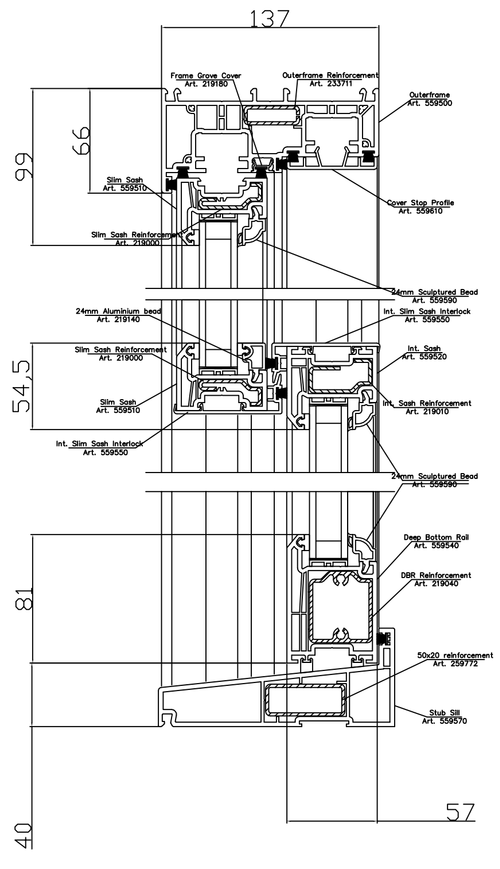

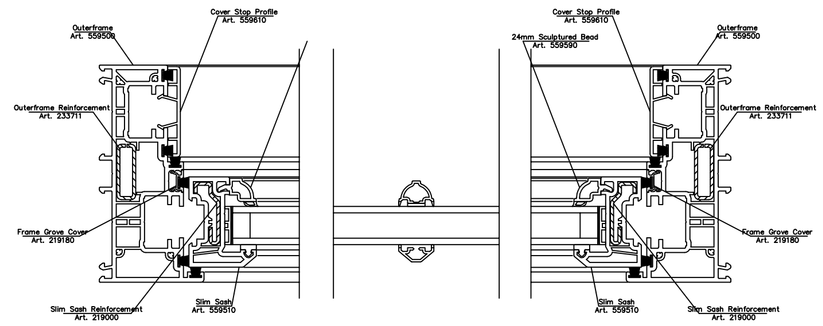

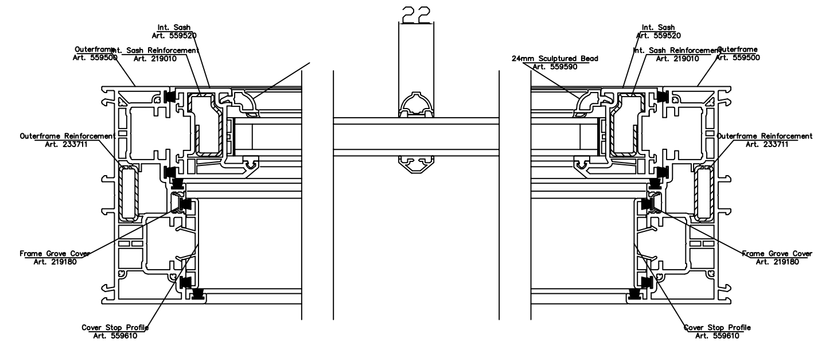

Tony Rogers
Building Consultants
Address: 40 Dawn Crescent, Upper Beeding
West Sussex, BN44 3WH
Telephone: 01903 815225 Fax: 01903 815225

Rev.	Date:	Revision Description:

Client: Mr P Meredith

Address: 52-54 Tarring Road
Worthing
West Sussex
BN11 4ET

Project: Proposed
Redevelopment to
3x1 Bedroom Houses

Scale: Not to scale
Paper Size A1

Date: May 2014

Drawing No: 14/934/02

Drawn By: AWR

Revision: