CITYZEN IS THE TRADING NAME FOR CITYZEN LIMITED; REGISTERED OFFICE: PRESTON PARK HOUSE, BRIGHTON, BN1 6SB; REGISTERED NUMBER: 10634993

A3 : 297 x 420

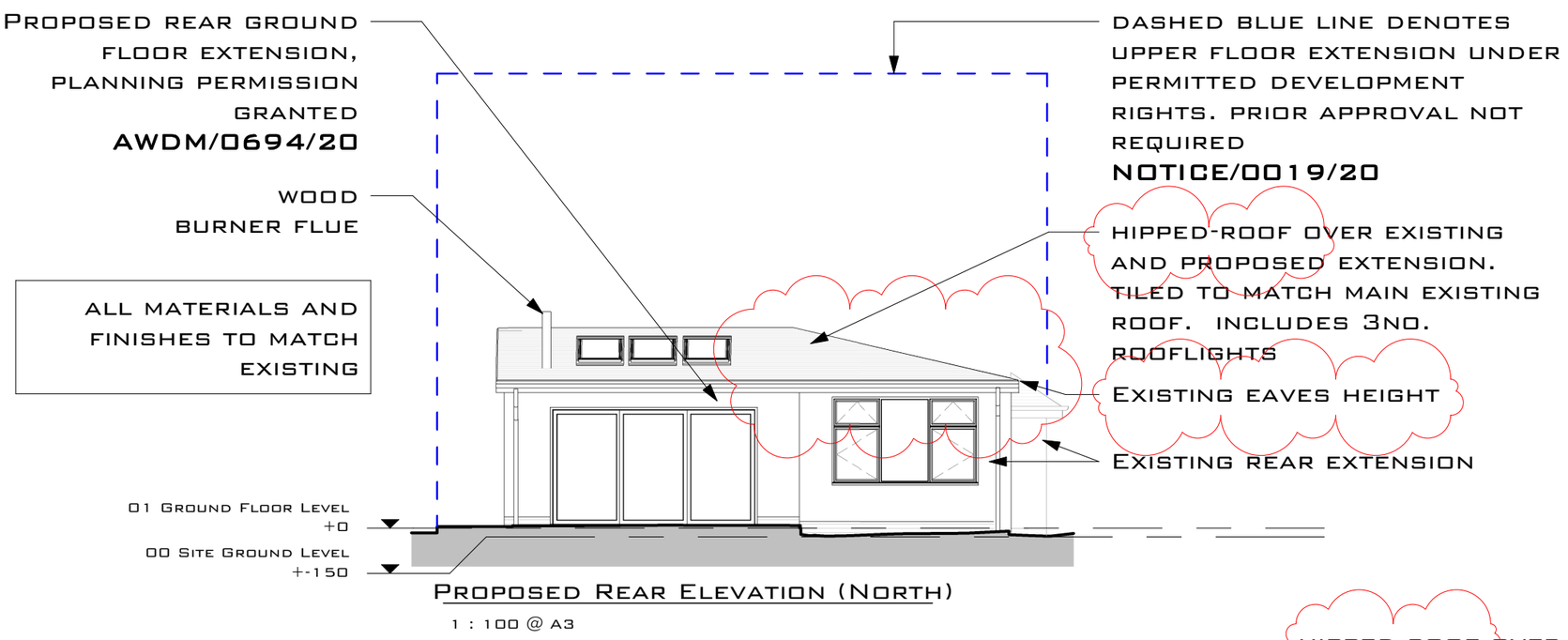

PROPOSED REAR ELEVATION (NORTH)

1 : 100 @ A3

NOTES:

- ALL DIMENSIONS ARE IN MM, UNLESS STATED OTHERWISE.
- DRAWINGS SHOULD ONLY BE SCALED FOR PLANNING PURPOSES. DO NOT SCALE FROM THIS DRAWING FOR CONSTRUCTION PURPOSES.
- ANY ERRORS OR OMISSIONS TO BE NOTIFIED TO CITYZEN IMMEDIATELY.
- CITYZEN IS NOT RESPONSIBLE FOR ANY BUILDING WORK THAT IS CARRIED OUT ON SITE.
- THIS DRAWING IS FOR PLANNING PURPOSES ONLY - DO NOT BUILD FROM THIS DRAWING.

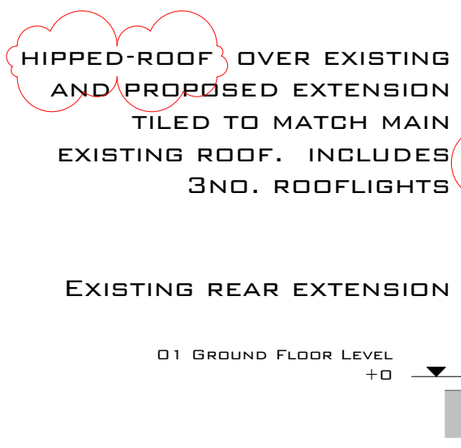

PROPOSED LEFT ELEVATION (WEST)

1 : 100 @ A3

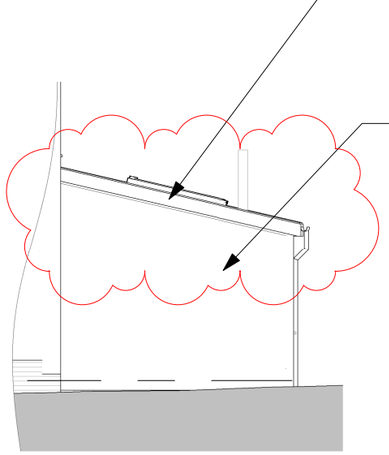

PROPOSED RIGHT ELEVATION (EAST)

1 : 100 @ A3

REV	DATE	REVISION	DRAWN	CHECKED	APPROVED
A	17.05.21	ROOF TYPE REVISED	AG		

PLANNING

0M 1M 2M 3M 4M 5M 10M

SCALE BAR @ 1:100

CLIENT: RACHEL BROWN

PROJECT: 5 MILL HILL DRIVE, SHOREHAM BY SEA, BN43 5TJ

TITLE: PROPOSED ELEVATIONS TO REAR GROUND FLOOR EXTENSIONS

CITYZEN ARCHITECTURE | ENVIRONMENT
MARITIME HOUSE
BASIN ROAD NORTH
HOVE
EAST SUSSEX
BN41 1WR
CONTACT@CITYZENDESIGN.CO.UK
WWW.CITYZENDESIGN.CO.UK
01273 915010
Chartered Institute of Architectural Technologists
Registered Practice

SCALE: 1 : 100 @ A3

DESIGNER: AINARA GOIKOETXEA

©COPYRIGHT CITYZEN LIMITED

DATE: 29.03.21

DRAWING: PROJECT REF - DRG NO. (REVISION)
2047 -PL - 350 - (A)