07 APR 2009

DAIKIN



Conveni-pack – A Low Noise Option

Noise Figures For External Distribution

DAIKIN



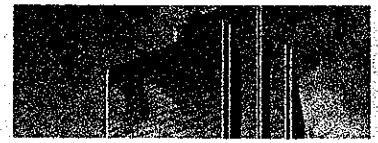

Conveni-pack Noise Figures for Distribution

Maximum Noise output Headline Figure	→	46 dB (a)
Figure For Daytime Partial Heat Recovery	→	42 dB (a)
Figure For Night-time Partial Heat Recovery	→	31 dB (a)

DAIKIN

Daikin Air conditioning UK – Refreshes your life

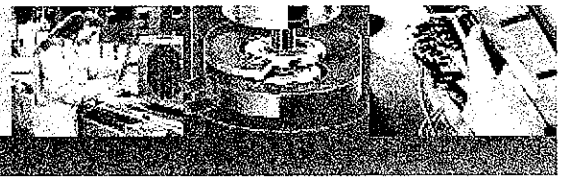

Left and Front of the Outdoor Unit

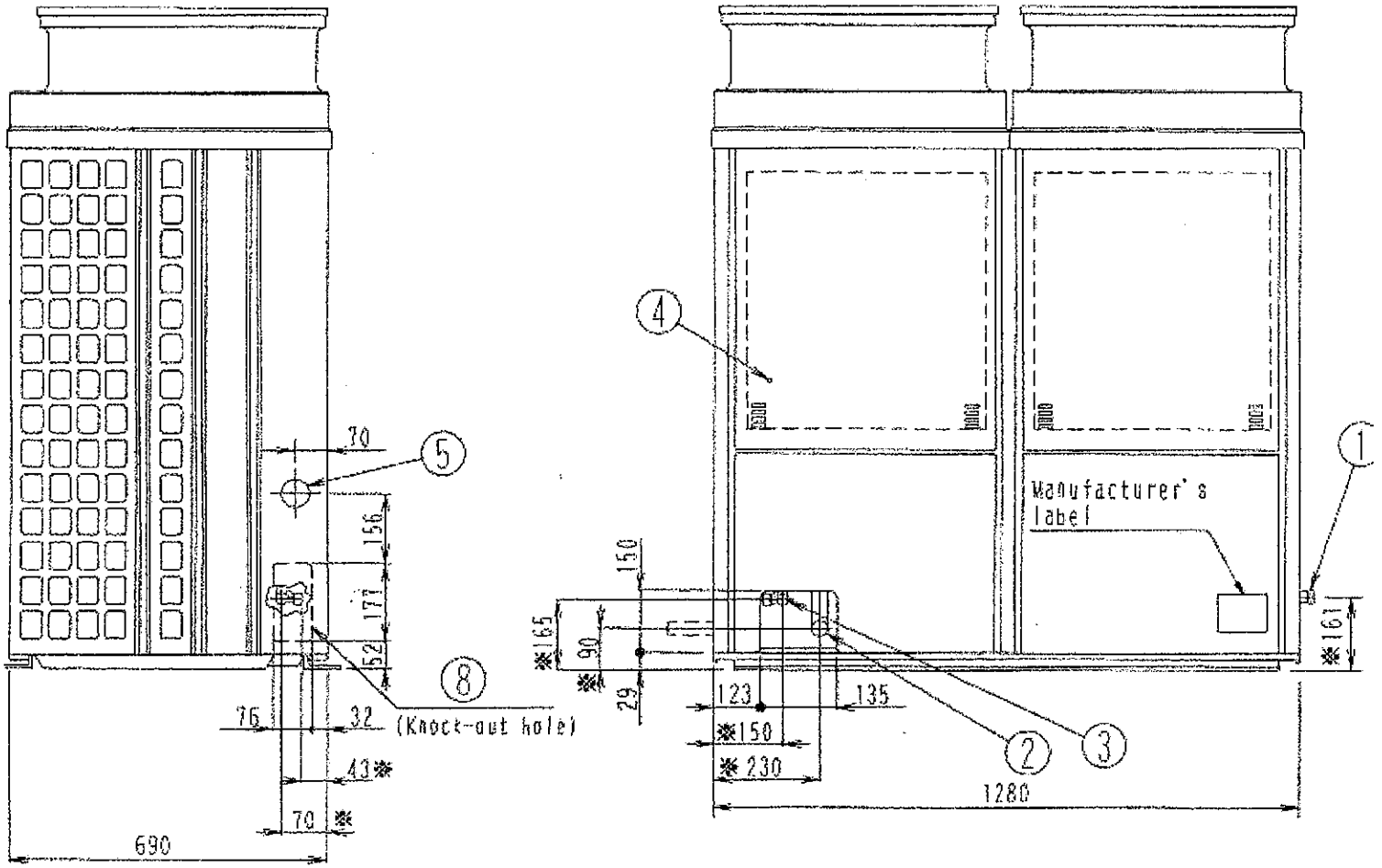

DAIKIN

Daikin Air conditioning UK – Refreshes your life

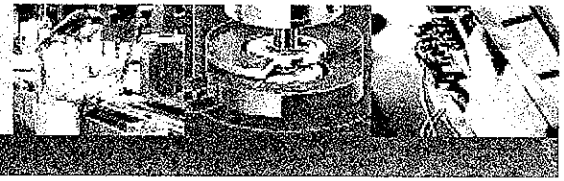

Plan and Feet Detail

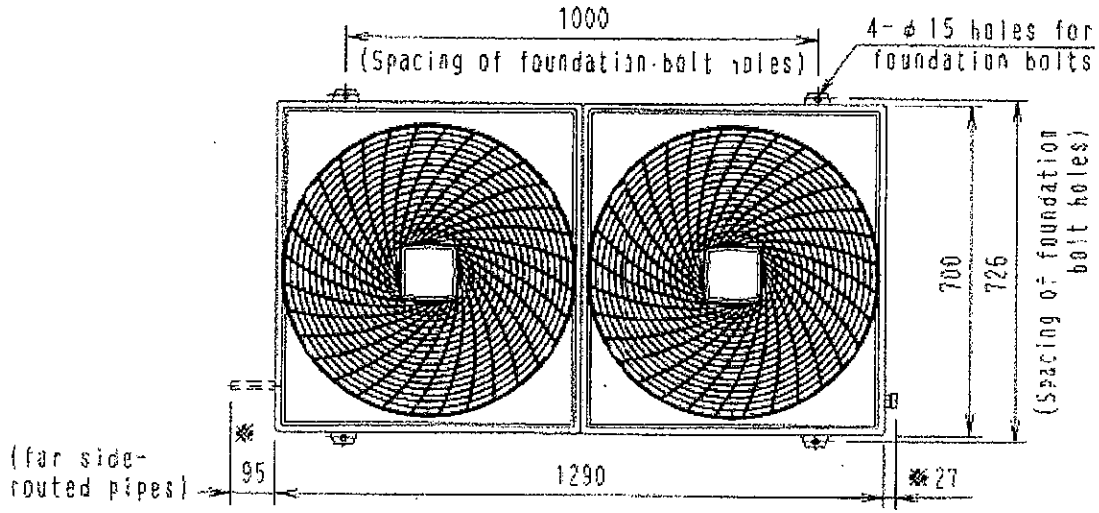

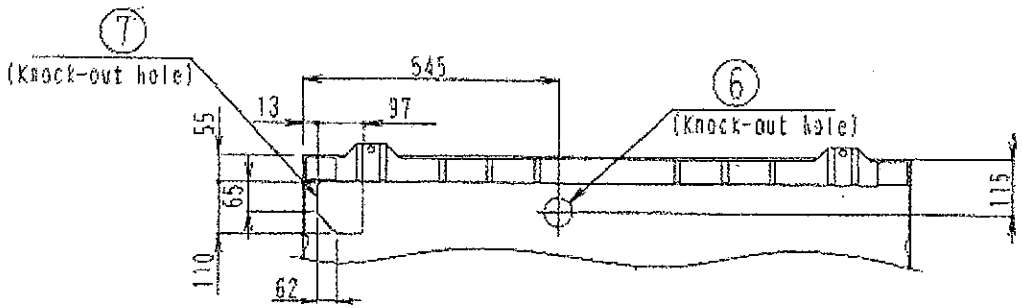

DAIKIN

Daikin. Air conditioning UK – Refreshes your life

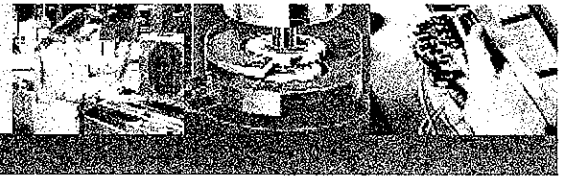

Right Side View, and Legend

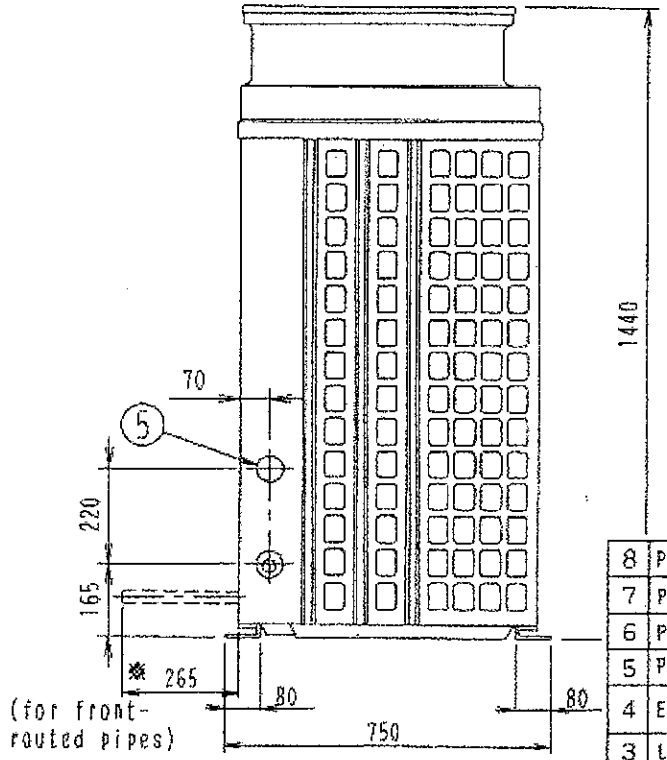

No.	Part name	Remarks
8	Pipe routing hole(side panel)	
7	Pipe routing hole(bottom panel)	See Note)2.
6	Power supply connection(bottom panel)	φ60
5	Power supply connection(side panel)	φ62
4	Earth terminal	Inside of electrical parts box(left), M8
3	Liquid piping connection	φ15.9 brazed connect
2	Gas piping connection on air conditioning side	φ28.6 brazed connect
1	Gas piping connection on refrigeration/freezing sides	φ28.6 brazed connect