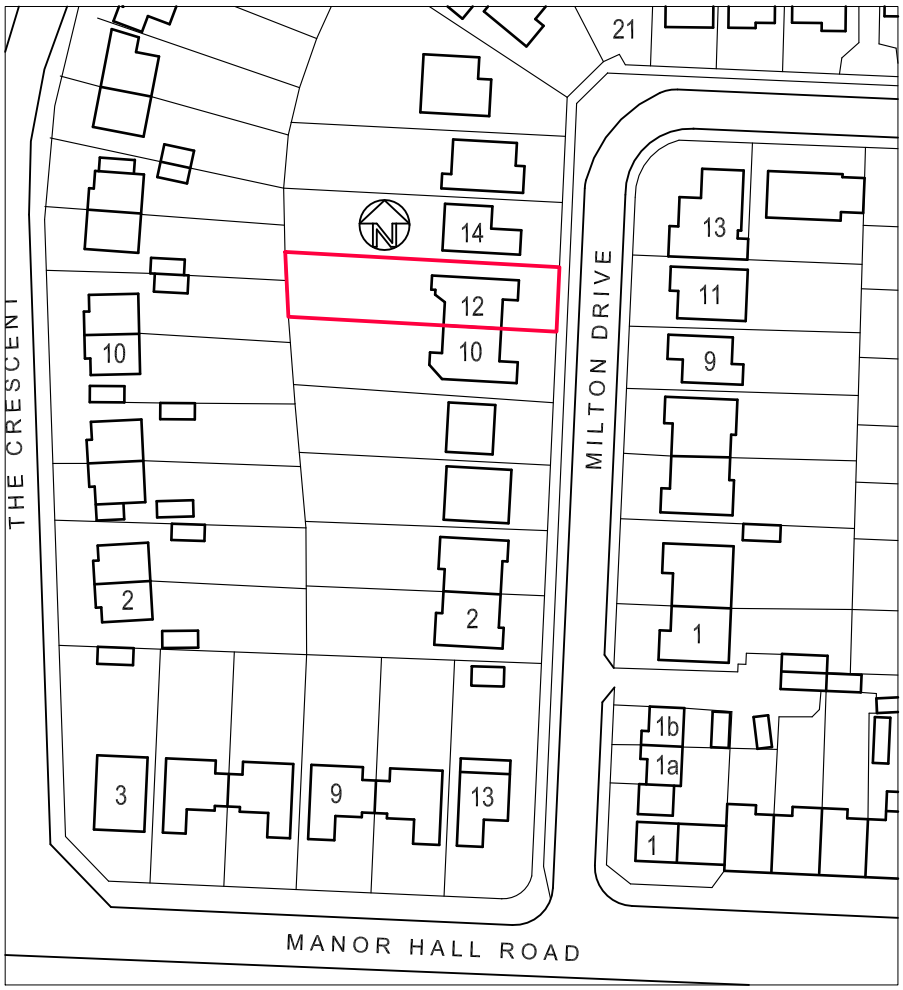

Location Plan 1:1250

100 metres @ 1:1250 on A4

10 metres @ 1:1250 on A4

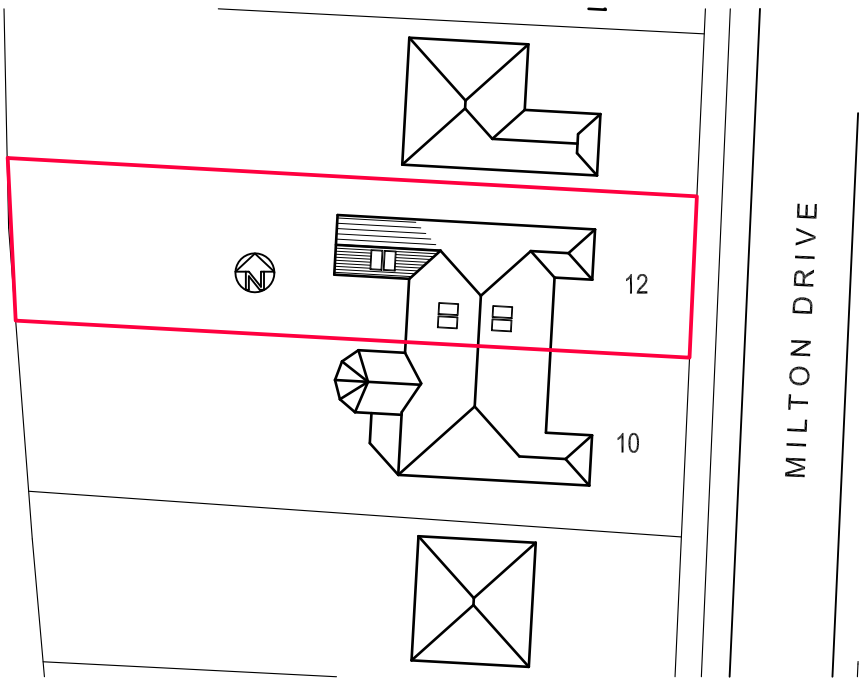

Proposed Block Plan 1:500

50 metres @ 1:500 on A4

10 metres @ 1:500 on A4

rev.	date

These drawings should be approved by Local Authority Building Control or other appropriate checking Authority prior to commencement of the work.

No dimensions to be scaled from this drawing.
All dimensions to be checked on site.
This drawing is copyright.

client
Ivor Moses

project
12 Milton Drive

drawing
Location & Block Plans

scale as shown@A3 date 27.08.09

drawn BBB

9 Kenton Road
Hove, East Sussex
BN3 4PG
tel: 01273 298217
fax: 01273 298217
e-mail: info@clairehaigharchitects.co.uk

Claire Haigh
Associates Ltd

CH 324 /001 rev.