W1

LOCATION	**KITCHEN** - Front Elevation		
APPROXIMATE SIZE	1590mm(w) x 1300mm(ht)		
PRODUCT:	SELECTA ADVANCE 70 SCULPURED SUITE - Open-Out Casement Window		
TYPE:	PVC-U double glazed		
COLOUR:	White	**NO. REQ.**	1

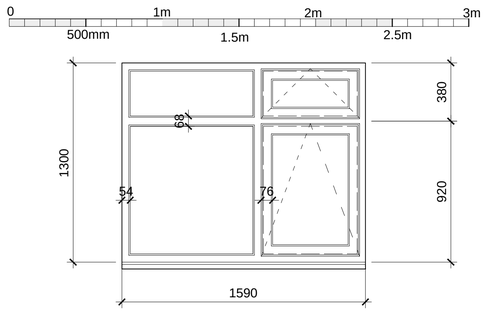

ELEVATION
Viewed from outside
Scale 1:20

D1

LOCATION	**BEDROOM** - Front Elevation		
APPROXIMATE SIZE	2700mm(w) x 2130mm(ht)		
PRODUCT:	SELECTA MASTERSlide patio door system		
TYPE:	PVC-U double glazed		
COLOUR:	White	**NO. REQ.**	1

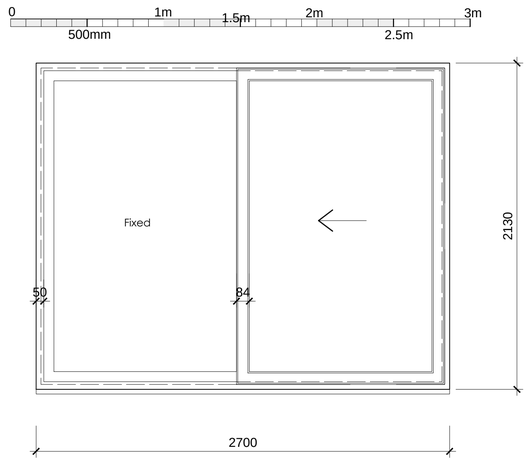

ELEVATION
Viewed from outside
Scale 1:20

D2

LOCATION	**LOUNGE** - Rear Elevation		
APPROXIMATE SIZE	2000mm(w) x 2140mm(ht)		
PRODUCT:	SELECTA MASTERSlide patio door system		
TYPE:	PVC-U double glazed		
COLOUR:	White	**NO. REQ.**	1

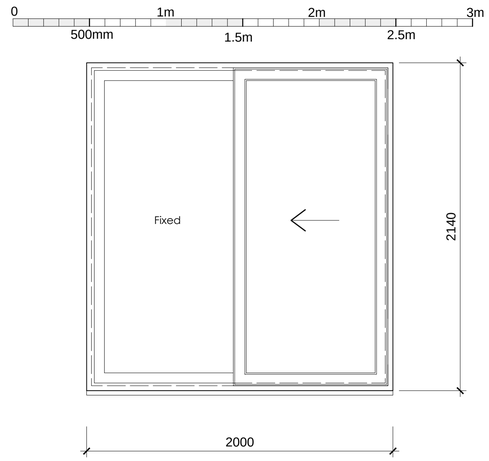

ELEVATION
Viewed from outside
Scale 1:20

D3

LOCATION	**LOUNGE** - Rear Elevation		
APPROXIMATE SIZE	5100mm(w) x 2140mm(ht)		
PRODUCT:	SELECTA MASTERSlide patio door system		
TYPE:	PVC-U double glazed		
COLOUR:	White	**NO. REQ.**	1

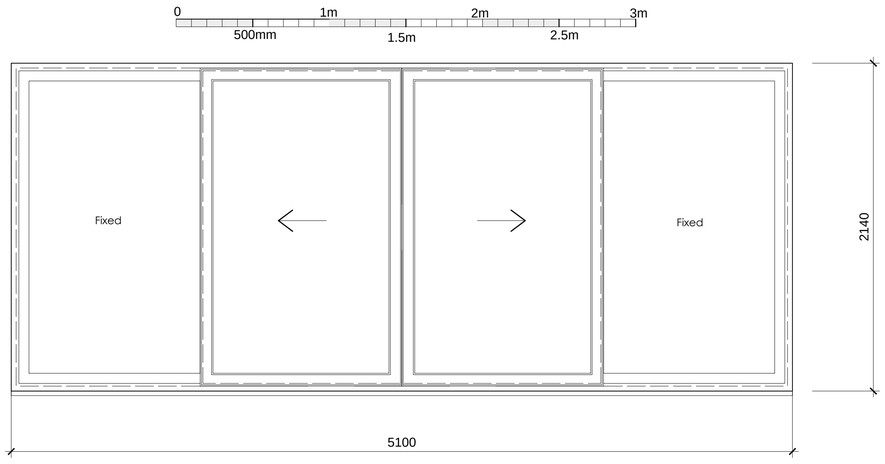

ELEVATION
Viewed from outside
Scale 1:20

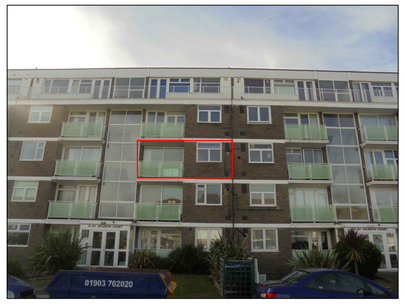

FRONT ELEVATION





REAR ELEVATION



NOTES

All dimensions to be verified on site prior to any shop or site works being commenced.

Any discrepancies to be reported to the Surveyor before any work is put in hand.

This drawing is to be read in conjunction with all relevant consultants and specialists drawings and details.

ISSUED FOR OBTAINING PLANNING CONSENT ONLY.
SIZES OF NEW WINDOWS TO BE CONFIRMED ON SITE BY WINDOW CONTRACTOR.

Rev		Rev	
		A	17.11.2017 Position of D2 & D3 corrected

HOUSEHOLDER PLANNING APPLICATION
14.11.2017 Issued to LA for planning consent
Status

Drawing Title: **Window & Door Schedule** As proposed
Scale: 1:20 | Paper size: A1
Drawn by: MCH | Date: Nov. 2017
Drawing No.: **F65PC/HP/03/A** | Rev.: **A**

Client: **Mr & Mrs Sparrowhawk**

Job Title: **Flat 46 Atlantic Court, Ferry Road, Shoreham:** Window and patio door replacements.

stuart radley associates
Chartered Building Surveyors
Unit 5 Tungsten Building, George Street
Portslade, Brighton BN41 1RA
RICS
Tel. 01273 420606
Fax. 01273 420707
e-mail. info@stuartradleyassociates.co.uk