EXISTING

W2 - GF Front LH Single Casement
As Viewed **Internally**
Scale: 1:20 @ A3

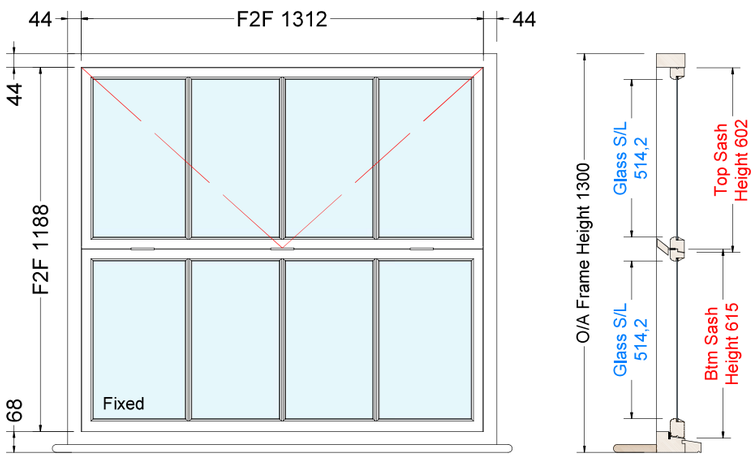





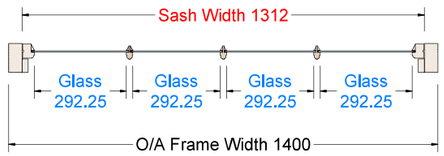


W2 - GF Front LH Single Casement
As Viewed **Externally**
Scale: 1:20 @ A3

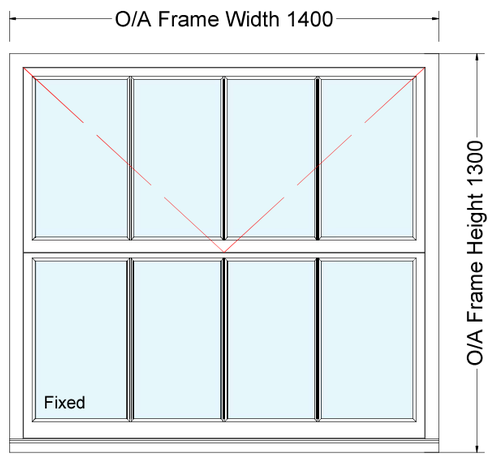


Casement Frame Head & Sash Head
Section Details
Scale: 1:2 @ A3

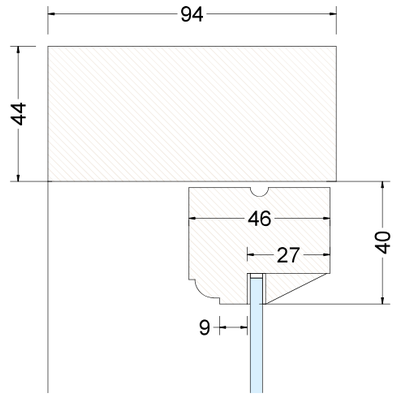


Sash Meeting Rail
Section Details
Scale: 1:2 @ A3

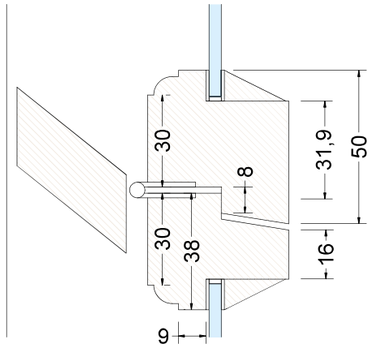


Casement Jamb & Sash Stile
Section Details
Scale: 1:2 @ A3

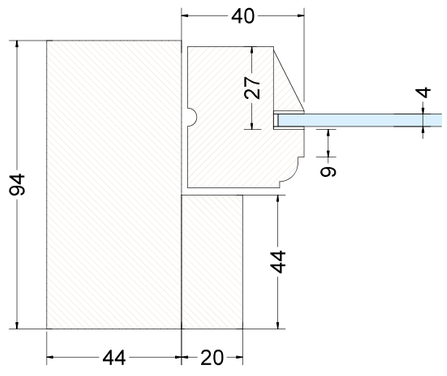


Glazing Bar
Section Details
Scale: 1:2 @ A3

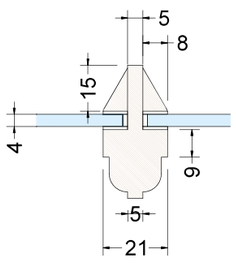


Casement Sill & Sash Bottom Rail
Section Details
Scale: 1:2 @ A3

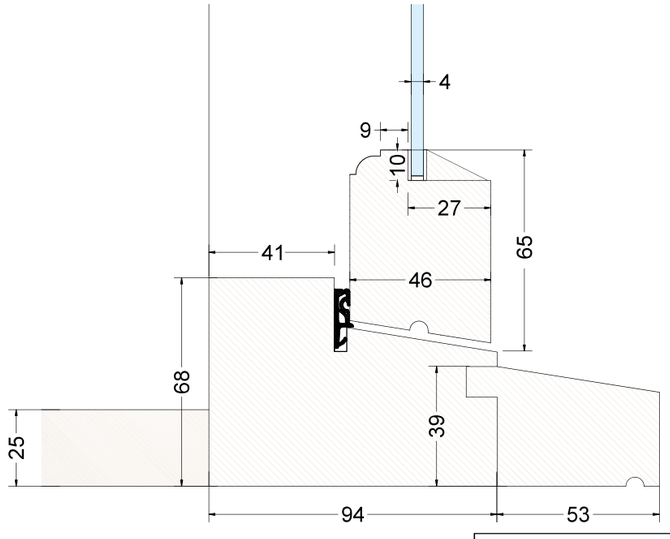


| | |
|---|---|
| Job Reference: | Dymott |
| Made By Date: | TBC |
| Location: | W2 GF Front LH |
| Quantity: | 1 |
| Timber Type: | Accoya |

**Casement Frame Detail:**

| | |
|---|---|
| Frame Mould: | Square |
| Frame Profile: | 94mm |
| Frame Head: | 44mm |
| Frame Jambs: | 44mm |
| Frame Cill: | 68mm |
| Sill Mould: | Square |
| Add On Sill: | 53mm |
| Frame Mullion: | N/A |
| Frame Transom: | N/A |
| Transom Height: | N/A |
| Trickle Vent: | N/A Listed |

**Casement Section Detail:**

| | |
|---|---|
| Casement Mould: | 6.5R Ovolo |
| Casement Profile: | 46mm |
| Casement Head: | 40mm |
| Casement Stiles: | 40mm |
| Casement Bottom Rail: | 65mm |
| Fan Bottom Rail: | N/A |
| Glazing Bars: | 21/ 6.5 Ovolo |

**Casement Hardware:**

**Ironmongery Finish:** Black

3 x 3" Ball Bearing Butt Hinges

2 x Barrel Bolts

**Glass Specification:**

**Unit Make Up:** 4mm Float, Clear

**Unit Build Up:**

4mm Low Iron, Single Glazed

**Paint Specification:**

**Frame:**
Internally: White Satin
Externally: White Satin

**Sash:**
Internally: White Satin
Externally: White Satin

Notes:
- Drawings to show the existing single casement with a bottom hung top sash which is hinged to the bottom fixed casement.
- Sashes have 4mm single glazed glass with 21mm integral glazing bars.

**Drawing Status:**

Initial:
- Drawing Submitted 28/04/2025.

REV 2:
- Drawing Submitted 01/09/2025.

REV 3:
- Drawing Submitted 03/10/2025.

MIDHURST Windows and Doors

EXISTING

W3 - GF Front LH Single Casement
As Viewed **Internally**
Scale: 1:20 @ A3

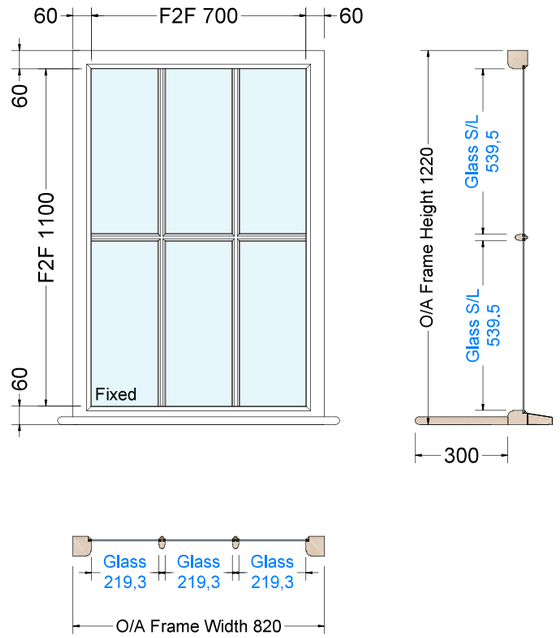





W3 - GF Front LH Single Casement
As Viewed **Externally**
Scale: 1:20 @ A3

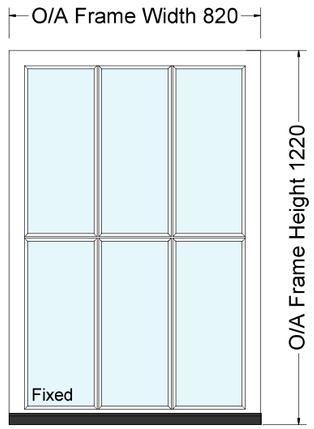


Casement Frame Head
Section Details
Scale: 1:2 @ A3

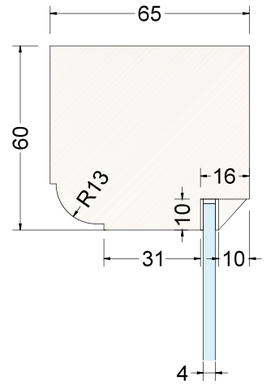


Casement Sill
Section Details
Scale: 1:2 @ A3

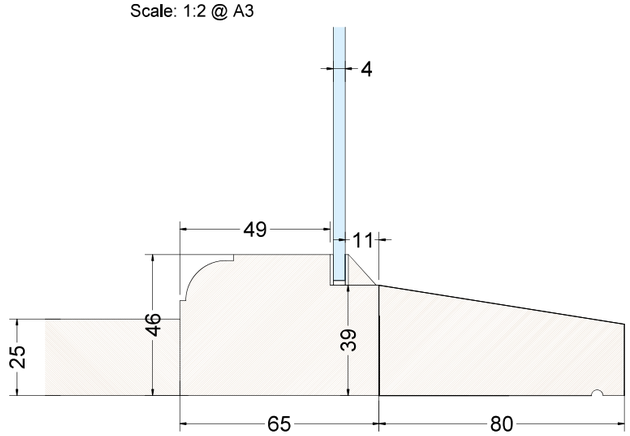


Casement Jamb
Section Details
Scale: 1:2 @ A3

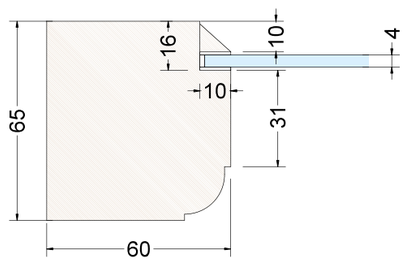


Glazing Bar
Section Details
Scale: 1:2 @ A3

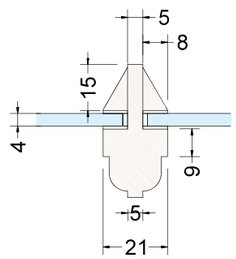


| | |
|---|---|
| Job Reference: | Dymott |
| Made By Date: | TBC |
| Location: | W3 GF Front LH |
| Quantity: | 1 |
| Timber Type: | Accoya |

**Casement Frame Detail:**

| | |
|---|---|
| Frame Mould: | 13R Ovolo |
| Frame Profile: | 65mm |
| Frame Head: | 60mm |
| Frame Jambs: | 60mm |
| Frame Cill: | 60mm |
| Sill Mould: | Square |
| Add On Sill: | 80mm |
| Frame Mullion: | N/A |
| Frame Transom: | N/A |
| Transom Height: | N/A |
| Trickle Vent: | N/A Listed |

**Casement Hardware:**
**Ironmongery Finish:** N/A

N/A Direct Glazed

**Glass Specification:**
**Unit Make Up:** 4mm Float, Clear
**Unit Build Up:**

4mm Low Iron, Single Glazed

**Paint Specification:**

**Frame:**
Internally: White Satin
Externally: White Satin

**Sash:**
Internally: White Satin
Externally: White Satin

Notes:
- Drawings to show the existing single direct glazed casement window.
- Sashes have 4mm single glazed glass with 21mm integral glazing bars.

**Drawing Status:**
Initial:
- Drawing Submitted 28/04/2025.
REV 2:
- Drawing Submitted 01/09/2025.
REV 3:
- Drawing Submitted 03/10/2025.

MIDHURST Windows and Doors

EXISTING

W4 - GF Side RH Triple Casement
As Viewed **Internally**
Scale: 1:20 @ A3

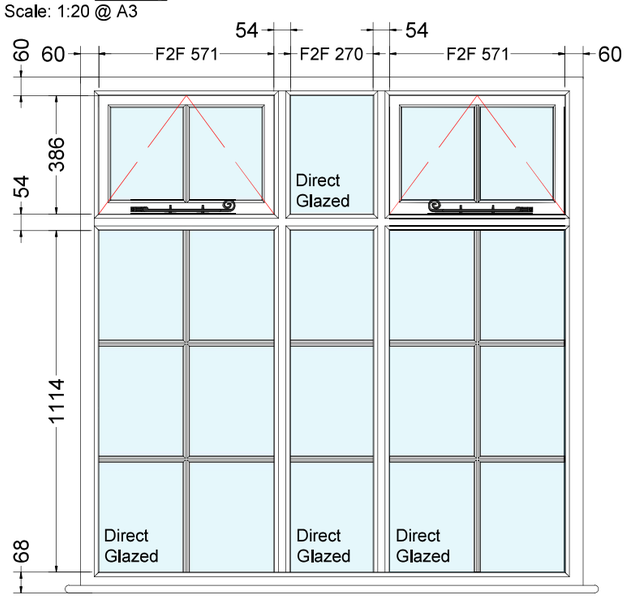


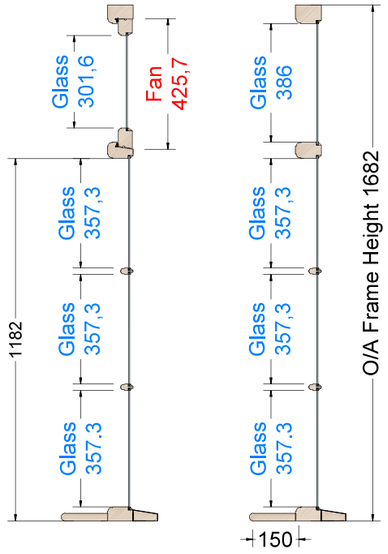


W4 - GF Side RH Triple Casement
As Viewed **Externally**
Scale: 1:20 @ A3

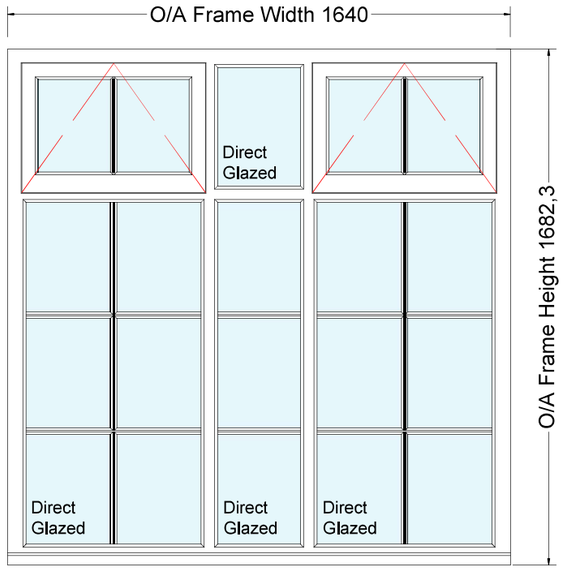


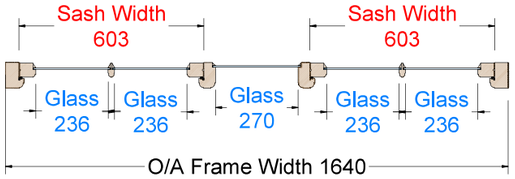


Casement Jamb
Section Details
Scale: 1:2 @ A3

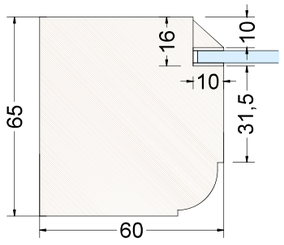


Glazing Bar
Section Details
Scale: 1:2 @ A3

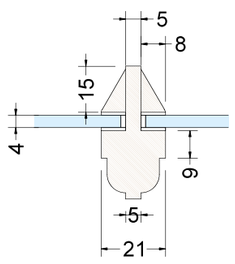


Casement Frame Transom & Fanlight
Bottom Rail
Section Details
Scale: 1:2 @ A3

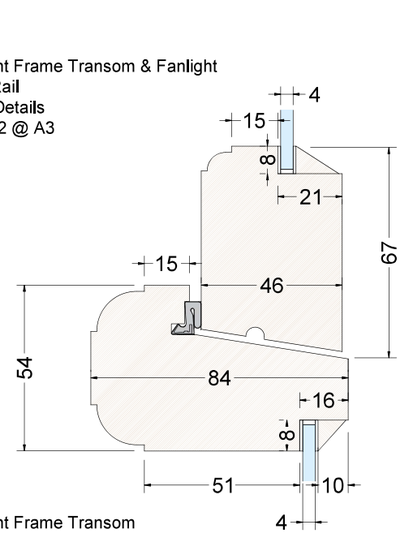


Casement Frame Transom
Section Details
Scale: 1:2 @ A3

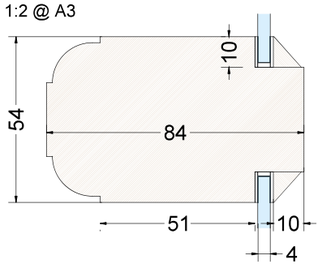


Casement Frame Head
Section Details
Scale: 1:2 @ A3

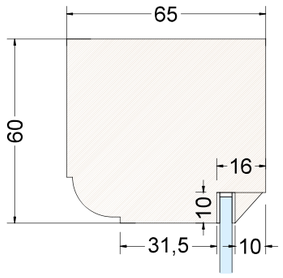


Casement Sill
Section Details
Scale: 1:2 @ A3

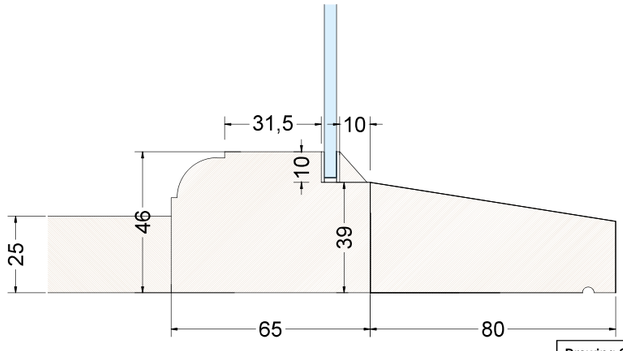


| | |
|---|---|
| Job Reference: | Dymott |
| Made By Date: | TBC |
| Location: | W4 GF Side RH |
| Quantity: | 1 |
| Timber Type: | Accoya |

**Casement Frame Detail:**

| | |
|---|---|
| Frame Mould: | 13R Ovolo |
| Frame Profile: | 94mm |
| Frame Head: | 60mm |
| Frame Jambs: | 60mm |
| Frame Cill: | 60mm |
| Sill Mould: | 13R Ovolo |
| Add On Sill: | 53mm |
| Frame Mullion: | 54mm |
| Frame Transom: | 54mm |
| Transom Height: | 1182mm |
| Trickle Vent: | N/A Listed |

**Casement Section Detail:**

| | |
|---|---|
| Casement Mould: | 6.5R Ovolo |
| Casement Profile: | 46mm |
| Casement Head: | 55mm |
| Casement Stiles: | 55mm |
| Casement Bottom Rail: | N/A |
| Fan Bottom Rail: | 67mm |
| Glazing Bars: | 21/ 6.5 Ovolo |

**Casement Hardware:**

**Ironmongery Finish:** Black

2 x 12" Monkey Tail Casement Stays
4 x 3" Ball Bearing Butt Hinges
2 x Locking Security Lock & Keys

**Glass Specification:**

**Unit Make Up:** 4mm Float, Clear

**Unit Build Up:**

4mm Low Iron, Single Glazed

**Paint Specification:**

**Frame:**
Internally: White Satin
Externally: White Satin

**Sash:**
Internally: White Satin
Externally: White Satin

Notes:
- Drawings to show the existing triple casement with direct glazed bottom sections and 2 top hung fanlights to the top sides with a direct glazed center.
- Sashes have 4mm single glazed glass with 21mm integral glazing bars.

**Drawing Status:**

Initial:
- Drawing Submitted 28/04/2025.

MIDHURST Windows and Doors

EXISTING

W5 - GF Side Center Double Casement
As Viewed **Internally**
Scale: 1:20 @ A3

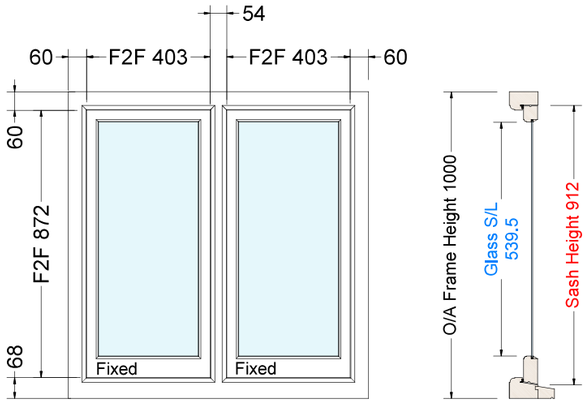


W5 - GF Side Center Double Casement
As Viewed **Externally**
Scale: 1:20 @ A3

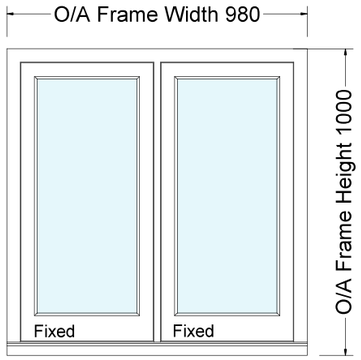


Casement Frame Head & Sash Head
Section Details
Scale: 1:2 @ A3

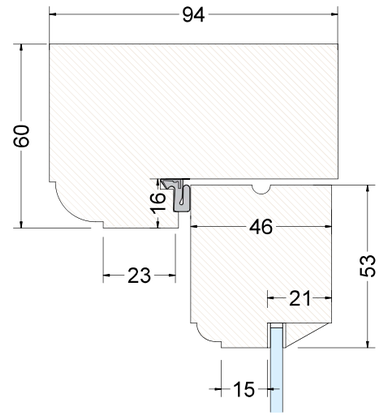


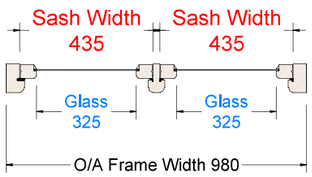


Casement Jamb & Sash Stile
Section Details
Scale: 1:2 @ A3

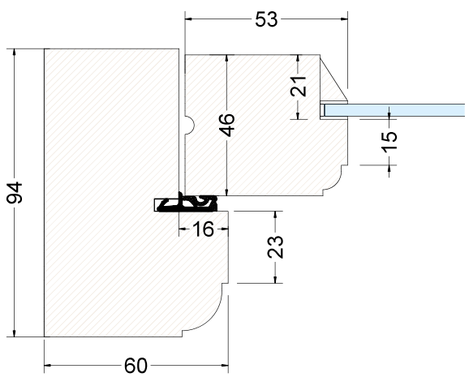


Casement Mullion & Sash Stile
Section Details
Scale: 1:2 @ A3

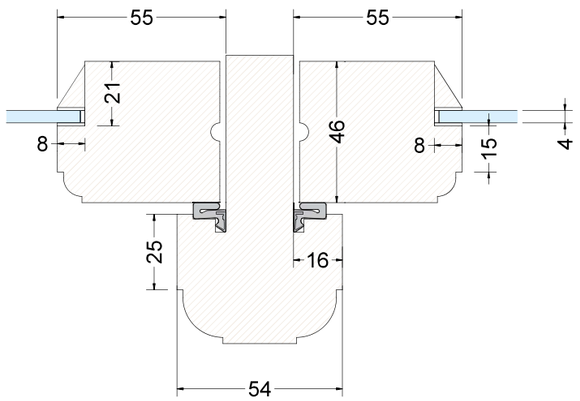


Casement Sill & Sash Bottom Rail
Section Details
Scale: 1:2 @ A3

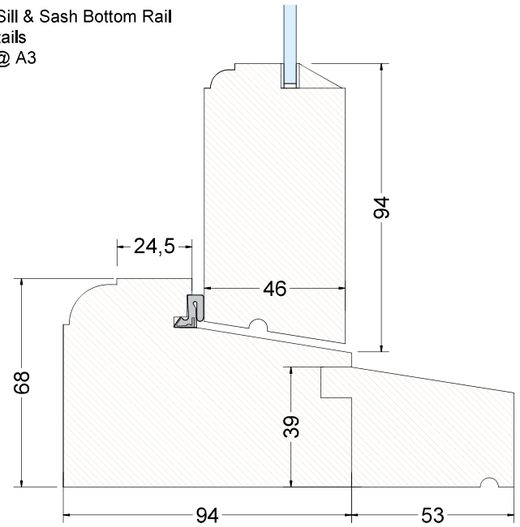


| | |
|---|---|
| Job Reference: | Dymott |
| Made By Date: | TBC |
| Location: | W5 GF Side Center |
| Quantity: | 1 |
| Timber Type: | Accoya |

**Casement Frame Detail:**

| | |
|---|---|
| Frame Mould: | 13R Ovolo |
| Frame Profile: | 94mm |
| Frame Head: | 60mm |
| Frame Jambs: | 60mm |
| Frame Cill: | 68mm |
| Sill Mould: | 13R ovolo |
| Add On Sill: | 53mm |
| Frame Mullion: | 54mm |
| Frame Transom: | N/A |
| Transom Height: | N/A |
| Trickle Vent: | N/A Listed |

**Casement Section Detail:**

| | |
|---|---|
| Casement Mould: | 6.5R Ovolo |
| Casement Profile: | 46mm |
| Casement Head: | 55mm |
| Casement Stiles: | 55mm |
| Casement Bottom Rail: | 96mm |
| Fan Bottom Rail: | N/A |
| Glazing Bars: | 21/ 6.5 Ovolo |

**Casement Hardware:**

**Ironmongery Finish:** N/A

N/A Fixed

**Glass Specification:**

**Unit Make Up:** 4mm Float, Clear

**Unit Build Up:**

4mm Low Iron, Single Glazed

**Paint Specification:**

**Frame:**
Internally: White Satin
Externally: White Satin

**Sash:**
Internally: White Satin
Externally: White Satin

Notes:
- Drawings to show the existing double casement with 2 fixed casement sashes which currently have stained glass pains.
- Sashes have 4mm single glazed glass with no glazing bars.

**Drawing Status:**
Initial:
- Drawing Submitted 28/04/2025.

MIDHURST Windows and Doors

EXISTING

W6 - GF Side LH Single Casement
As Viewed **Internally**
Scale: 1:20 @ A3

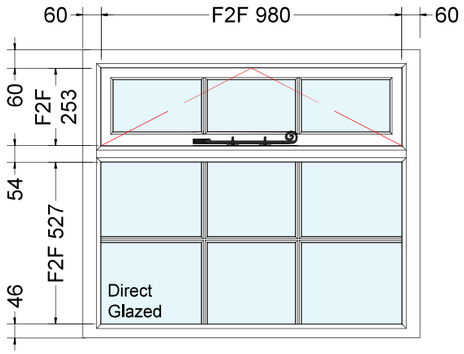


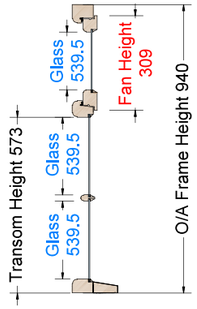


W6 - GF Side LH Single Casement
As Viewed **Externally**
Scale: 1:20 @ A3

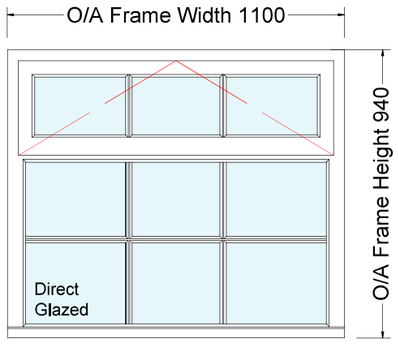


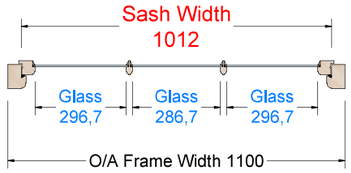


Casement Frame Head & Sash Head
Section Details
Scale: 1:2 @ A3

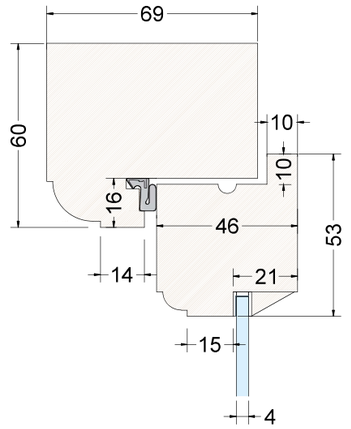


Casement Transom & Fan Bottom Rail
Section Details
Scale: 1:2 @ A3

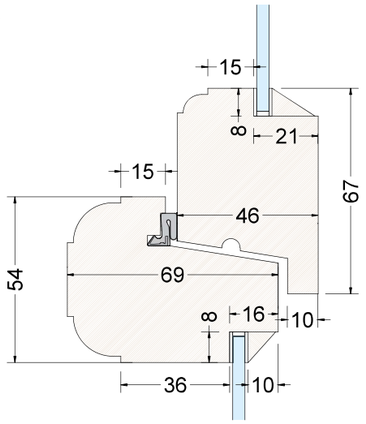


Casement Jamb & Sash Stile
Section Details
Scale: 1:2 @ A3

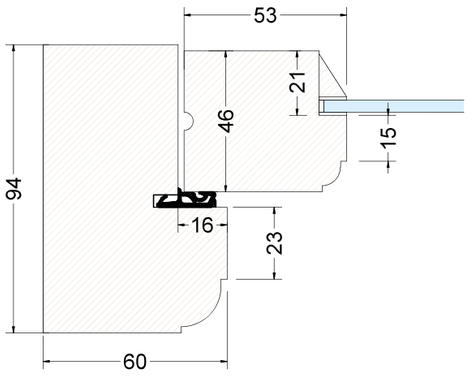


Glazing Bar
Section Details
Scale: 1:2 @ A3

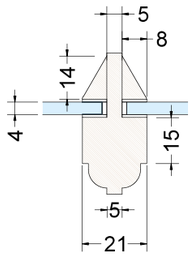


Casement Sill & Sash Bottom Rail
Section Details
Scale: 1:2 @ A3

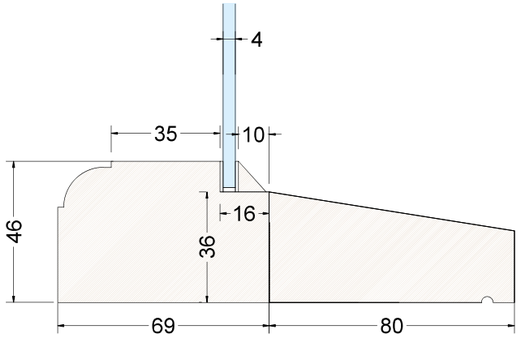


| | |
|---|---|
| Job Reference: | Dymott |
| Made By Date: | TBC |
| Location: | W6 GF Side LH |
| Quantity: | 1 |
| Timber Type: | Accoya |

**Casement Frame Detail:**

| | |
|---|---|
| Frame Mould: | 13R Ovolo |
| Frame Profile: | 94mm |
| Frame Head: | 60mm |
| Frame Jambs: | 60mm |
| Frame Cill: | 68mm |
| Sill Mould: | 13R ovolo |
| Add On Sill: | 53mm |
| Frame Mullion: | N/A |
| Frame Transom: | 54mm |
| Transom Height: | 573mm |
| Trickle Vent: | N/A Listed |

**Casement Section Detail:**

| | |
|---|---|
| Casement Mould: | 6.5R Ovolo |
| Casement Profile: | 46mm |
| Casement Head: | 55mm |
| Casement Stiles: | 55mm |
| Casement Bottom Rail: | N/A |
| Fan Bottom Rail: | 67mm |
| Glazing Bars: | 21/ 6.5 Ovolo |

**Casement Hardware:**

**Ironmongery Finish:** Black

1 x 12" Monkey Tail Casement Stays

3 x 3" Ball Bearing Butt Hinges

1 x Locking Security Lock & Keys

**Glass Specification:**

**Unit Make Up:** 4mm Float, Clear

**Unit Build Up:**

4mm Low Iron, Single Glazed

**Paint Specification:**

**Frame:**
Internally: White Satin
Externally: White Satin

**Sash:**
Internally: White Satin
Externally: White Satin

Notes:
- Drawings to show the existing single casement with a top hung fanlight and a direct glazed bottom section.
- Sashes have 4mm single glazed glass with 21mm integral glazing bars.

**Drawing Status:**

Initial:
- Drawing Submitted 28/04/2025.

REV 2:
- Drawing Submitted 01/09/2025.

MIDHURST Windows and Doors