PROPOSED

W2 - GF Front LH Single Box Sash
As Viewed **Internally**
Scale: 1:20 @ A3

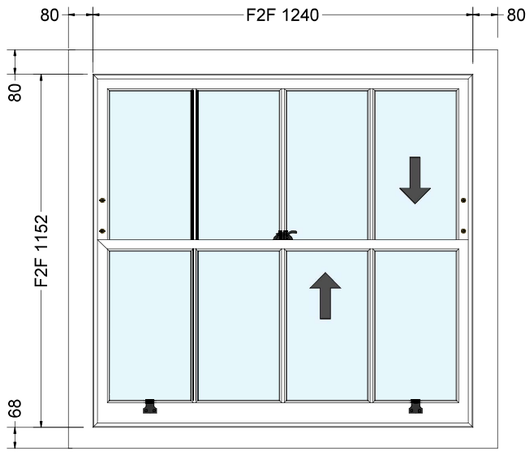

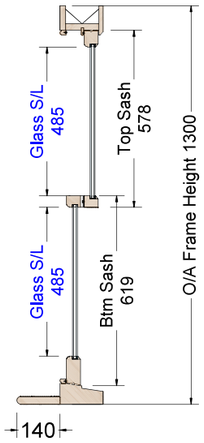

W2 - GF Front LH Single Box Sash
As Viewed **Externally**
Scale: 1:20 @ A3

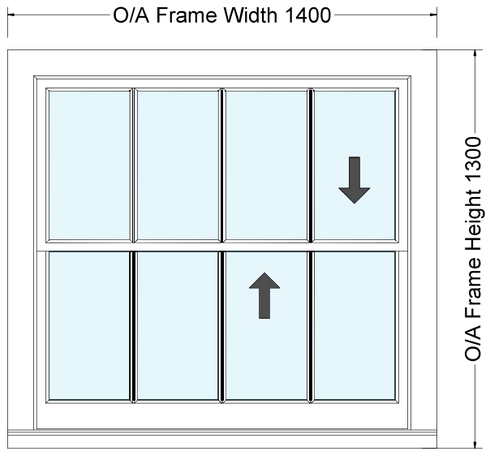

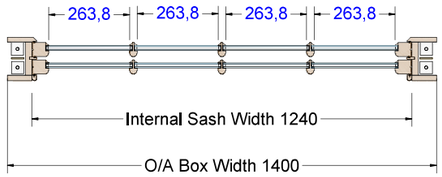

Box Frame Head & Sash Head
Section Details
Scale: 1:2 @ A3

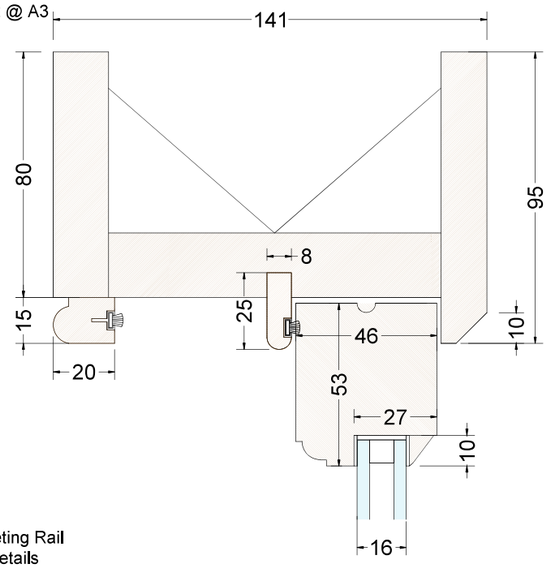

Sash Meeting Rail
Section Details
Scale: 1:2 @ A3

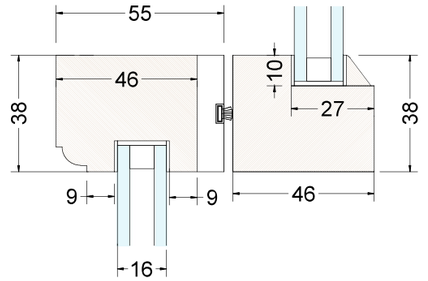

Box Frame Jamb & Sash Stile
Section Details
Scale: 1:2 @ A3

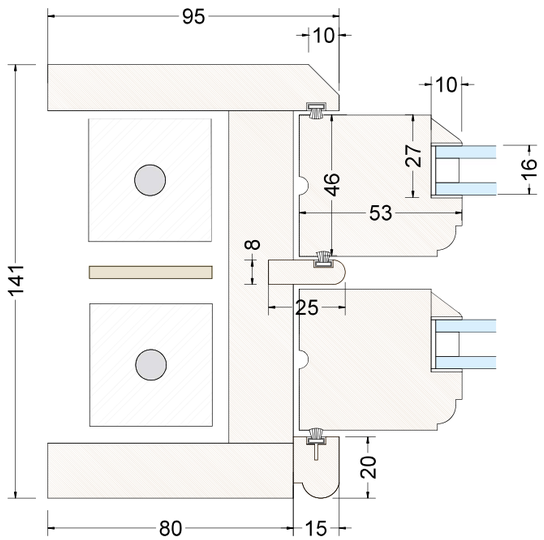

Glazing Bar
Section Details
Scale: 1:2 @ A3

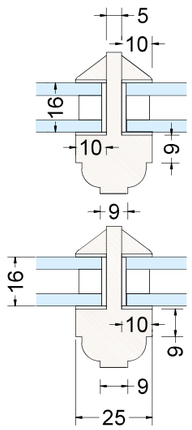

Box Sill & Sash Bottom Rail
Section Details
Scale: 1:2 @ A3

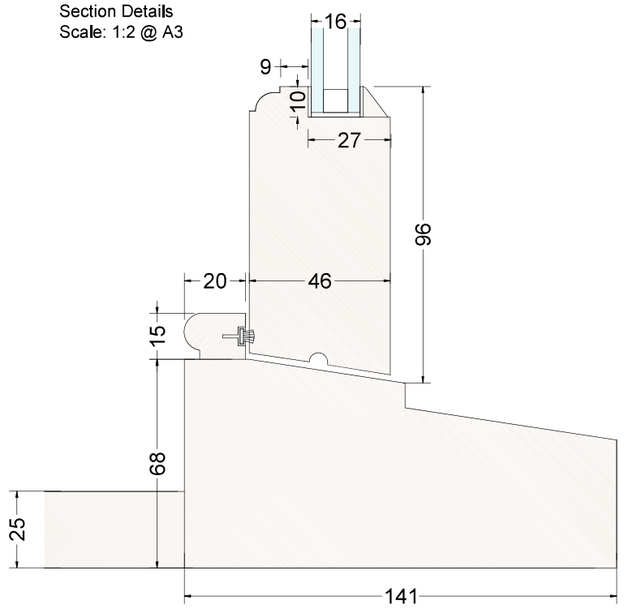

Job Reference:	Dymott
Made By Date:	TBC
Location:	W2 GF Front LH
Quantity:	1
Timber Type:	Accoya

Box Detail:

Inside Width:	1240mm
Inside Height:	1152mm
Box Thickness:	141mm
Int Head Liner:	80mm x 18mm
Ext Head Liner:	95mm x 15mm
Int Jambs Liners:	80mm x 18mm
Ext Jambs Liner:	95mm x 15mm
Frame Cill:	68mm
Add On Sill:	N/A
Trickle Vents:	N/A Listed

Sash Section Detail:

Sash Mould:	6.5R Ovolo
Sash Profile:	46mm
Sash Head:	55mm
Sash Stiles:	55mm
Sash Meeting Rail:	38mm
Sash Bottom Rail:	96mm
Glazing Bars:	23/ 6.5R Ovolo
Horns:	N/A
Horn Type:	N/A

Box Sash Window Hardware:

Ironmongery Finish: **Black**

1 x Fitch Catch
2 x Sash Lifts
2 x Rola Locks & Keys
4 x Pully Wheels

Glass Specification:

Unit Make Up: 4-8-4 Heritage

Unit Build Up:

4mm Low Iron Toughened Inner Pane - 8mm
White Spacer, Krypton Gas - 4mm Softcoat
Toughened Outer Pane - Individually Glazed

Paint Specification:

Frame:
Internally: White Satin
Externally: White Satin

Sash:
Internally: White Satin
Externally: White Satin

Notes:
- Drawings changed to single box sash window to keep detail in line with fixed casement next to it.
- Sashes are to have 16mm Heritage slimline units with 25mm integral glazing bars.
- This window will be supplied with a deep window board and an external add on sill to match the existing window.
- This window must be installed externally.

Drawing Status:

Initial:
- Drawing Submitted 28/04/2025.

REV 1:
- Drawing Submitted 13/05/2025.

MIDHURST Windows and Doors

PROPOSED

Job Reference:	Dymott
Made By Date:	TBC
Location:	W3 GF Front LH
Quantity:	1
Timber Type:	Accoya

Casement Frame Detail:

Frame Mould:	13R Ovolo
Frame Profile:	65mm
Frame Head:	60mm
Frame Jambs:	60mm
Frame Cill:	60mm
Sill Mould:	13R Ovolo
Add On Sill:	53mm
Frame Mullion:	N/A
Frame Transom:	N/A
Transom Height:	N/A
Trickle Vent:	N/A Listed

W3 - GF Front LH Single Casement
As Viewed **Internally**
Scale: 1:20 @ A3

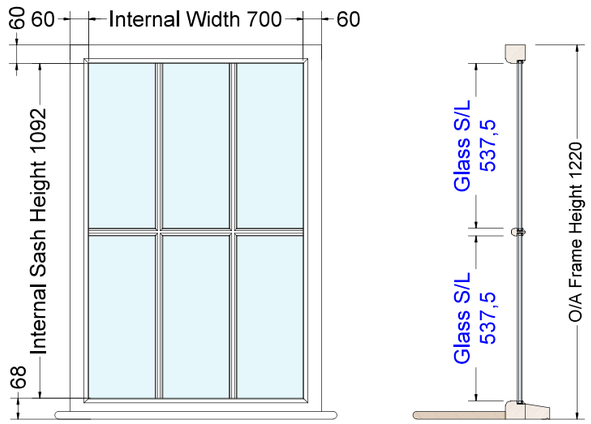

W3 - GF Front LH Single Casement
As Viewed **Externally**
Scale: 1:20 @ A3

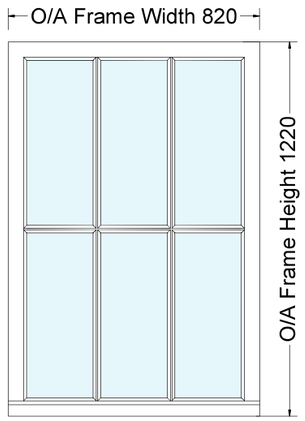

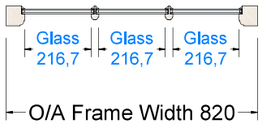

Casement Frame Head
Section Details
Scale: 1:2 @ A3

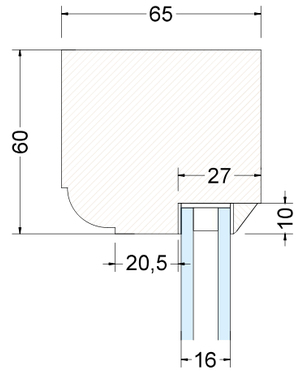

Glazing Bar
Section Details
Scale: 1:2 @ A3

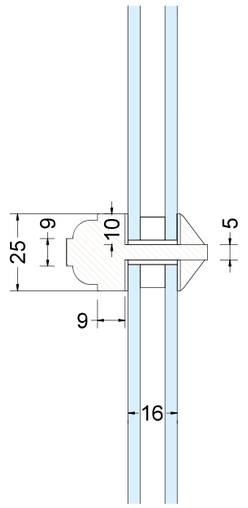

Casement Jamb
Section Details
Scale: 1:2 @ A3

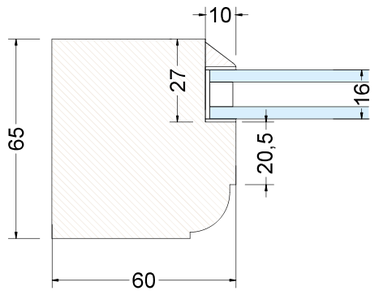

Glazing Bar
Section Details
Scale: 1:2 @ A3

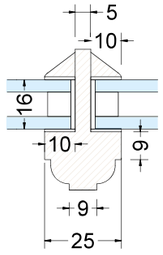

Casement Sill
Section Details
Scale: 1:2 @ A3

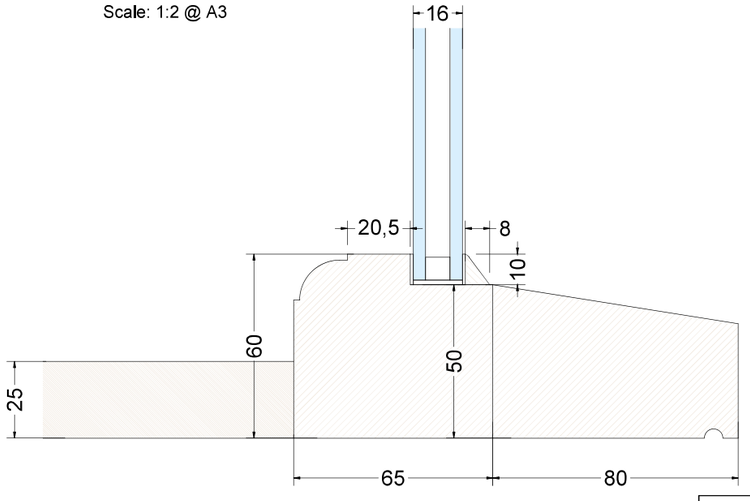

Glass Specification:

Unit Make Up: 4-8-4 Heritage

Unit Build Up:

4mm Low Iron Toughened Inner Pane - 8mm

White Spacer, Krypton Gas - 4mm Softcoat

Toughened Outer Pane - Individually Glazed

Paint Specification:

Frame:

Internally: White Satin

Externally: White Satin

Notes:
- Drawings to show the proposed Single casement which will now be direct glazed to match existing.
- To have 16mm Heritage slimline units with 25mm integral glazing bars.
- This window will be supplied with a deep window board and an external add on sill to match the existing window.
- This window must be installed externally.

Drawing Status:

Initial:
- Drawing Submitted 28/04/2025.

REV 1:
- Drawing Submitted 13/05/2025.

REV 2:
- Drawing Submitted 01/09/2025.

MIDHURST Windows and Doors

PROPOSED

W4 - GF Side RH Triple Casement
As Viewed **Internally**
Scale: 1:20 @ A3

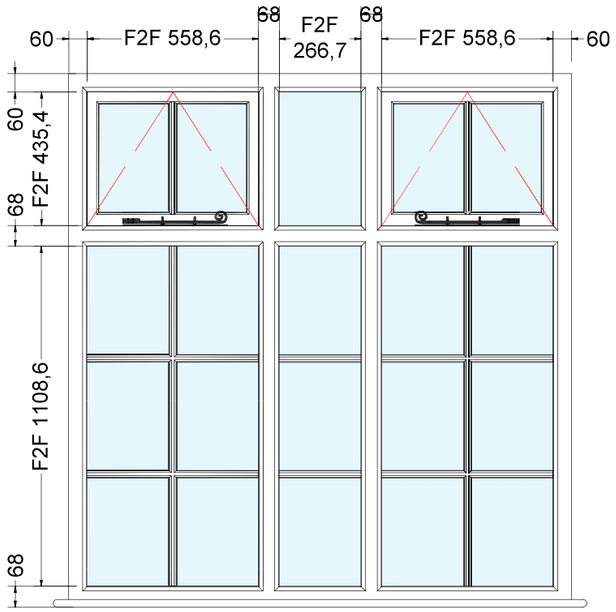

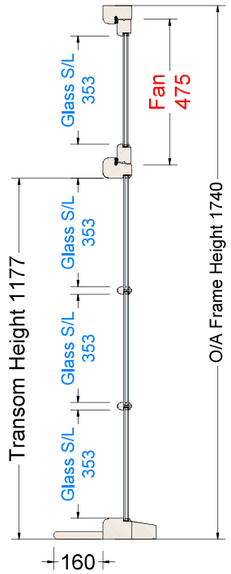

W4 - GF Side RH Triple Casement
As Viewed **Externally**
Scale: 1:20 @ A3

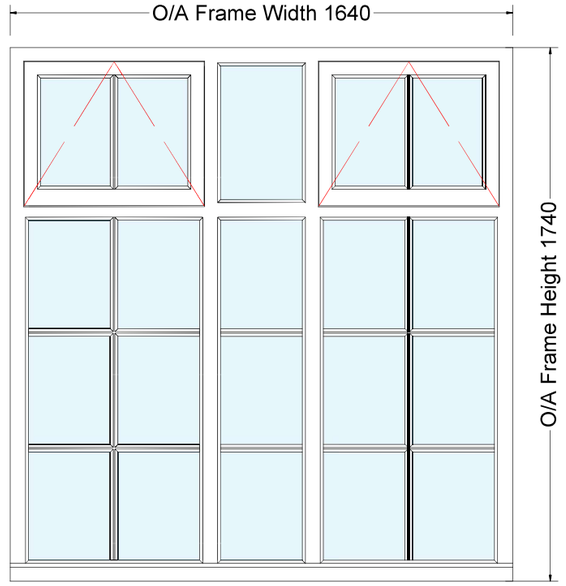

Casement Frame Head & Sash Head
Section Details
Scale: 1:2 @ A3

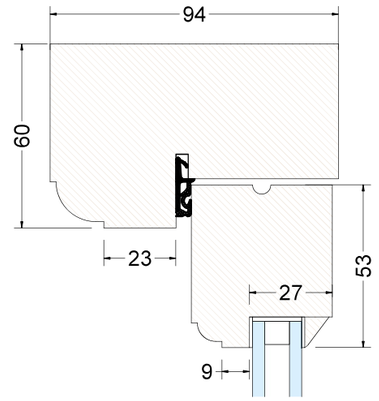

Casement Frame Transom & Sash
Section Details
Scale: 1:2 @ A3

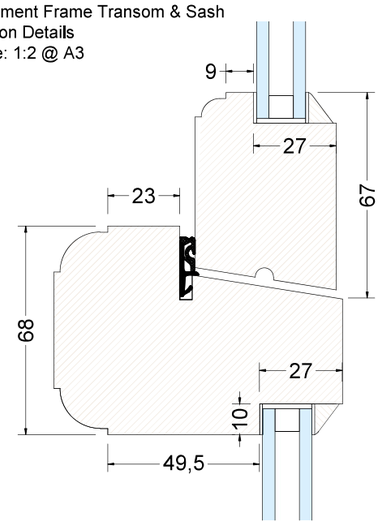

Job Reference:	Dymott
Made By Date:	TBC
Location:	W4 GF Side RH
Quantity:	1
Timber Type:	Accoya

Casement Frame Detail:

Frame Mould:	13R Ovolo
Frame Profile:	94mm
Frame Head:	60mm
Frame Jambs:	60mm
Frame Cill:	68mm
Sill Mould:	13R Ovolo
Add On Sill:	53mm
Frame Mullion:	68mm
Frame Transom:	68mm
Transom Height:	1177mm
Trickle Vent:	N/A Listed

Casement Section Detail:

Casement Mould:	6.5R Ovolo
Casement Profile:	46mm
Casement Head:	55mm
Casement Stiles:	55mm
Casement Bottom Rail:	96mm
Fan Bottom Rail:	67mm
Glazing Bars:	25/ 6.5 Ovolo

Casement Hardware:

Ironmongery Finish: Black

2 x 12" Monkey Tail Casement Stays

4 x 3" Ball Bearing Butt Hinges

2 x Locking Security Lock & Keys

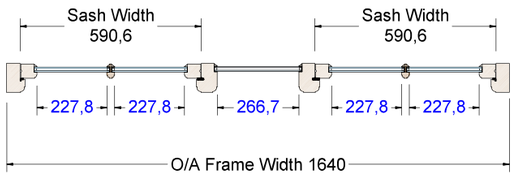

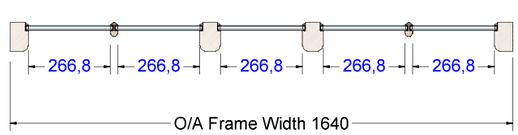

Casement Jamb & Sash Stile
Section Details
Scale: 1:2 @ A3

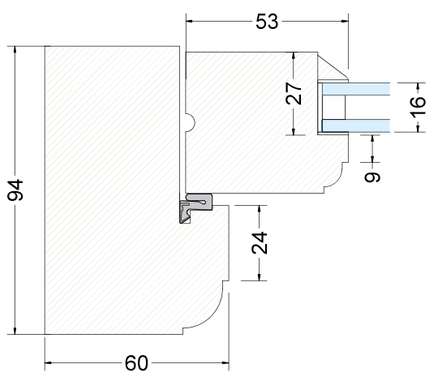

Glazing Bar
Section Details
Scale: 1:2 @ A3

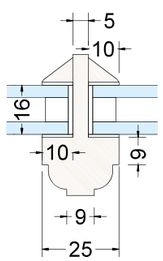

Casement Mullion & Sash Stile
Section Details
Scale: 1:2 @ A3

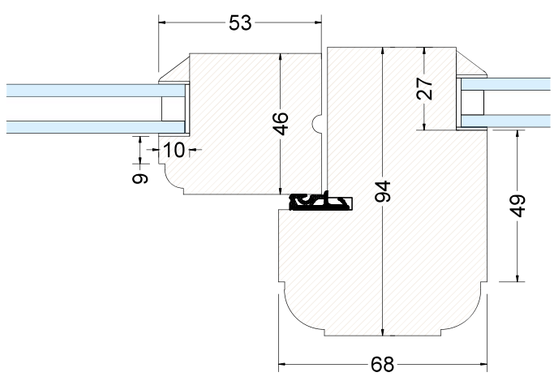

Casement Sill & Sash Bottom Rail
Section Details
Scale: 1:2 @ A3

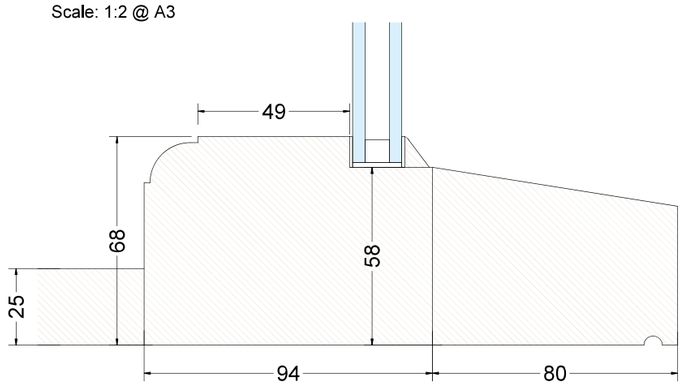

Glass Specification:

Unit Make Up: 4-8-4 Heritage

Unit Build Up:

4mm Low Iron Toughened Inner Pane - 8mm

White Spacer, Krypton Gas - 4mm Softcoat

Toughened Outer Pane - Individually Glazed

Paint Specification:

Frame:
Internally: White Satin
Externally: White Satin

Sash:
Internally: White Satin
Externally: White Satin

Notes:
- Drawings to show the proposed Triple casement with 2 top hung casements 1 center section all direct glazed.
- Sashes are to have 16mm Heritage slimline units with 25mm integral glazing bars.
- This window will be supplied with a deep window board and an external add on sill to match the existing window.
- This window must be installed externally.

Drawing Status:

Initial:
- Drawing Submitted 28/04/2025.

MIDHURST Windows and Doors

PROPOSED

W5 - GF Side Center Double Casement
As Viewed **Externally**
Scale: 1:20 @ A3

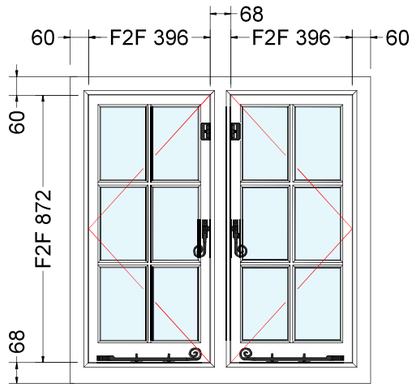



W5 - GF Side Center Double Casement
As Viewed **Externally**
Scale: 1:20 @ A3

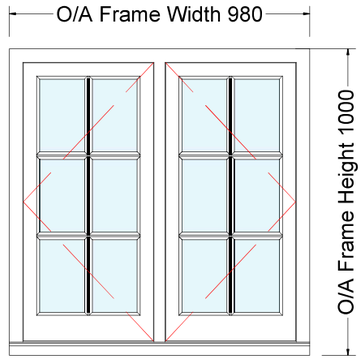

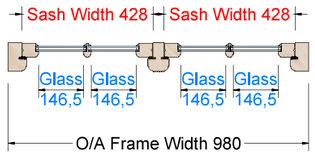

Casement Frame Head & Sash Head
Section Details
Scale: 1:2 @ A3

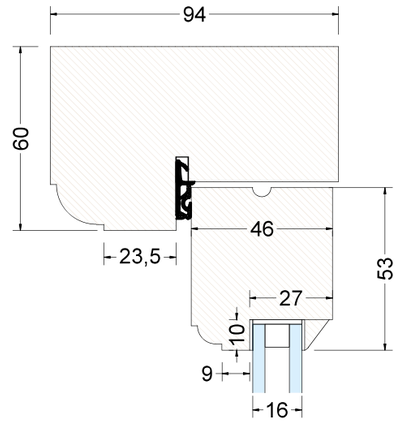

Glazing Bars
Section Details
Scale: 1:2 @ A3

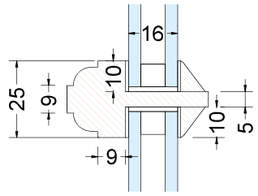

Casement Jamb & Sash Stile
Section Details
Scale: 1:2 @ A3

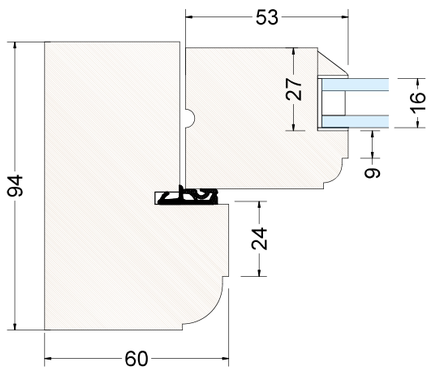

Glazing Bar
Section Details
Scale: 1:2 @ A3

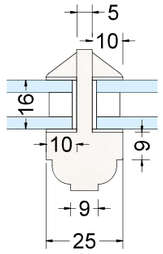

Casement Jamb & Sash Stile
Section Details
Scale: 1:2 @ A3

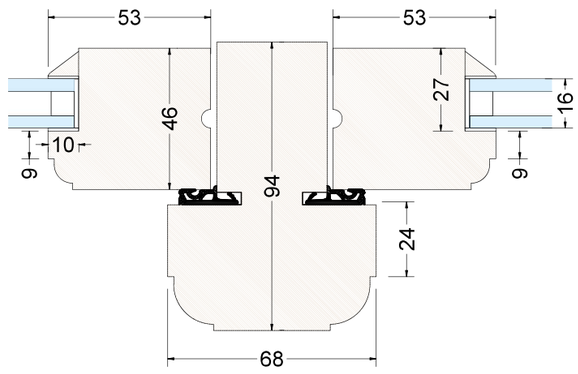

Casement Sill & Sash Bottom Rail
Section Details
Scale: 1:2 @ A3

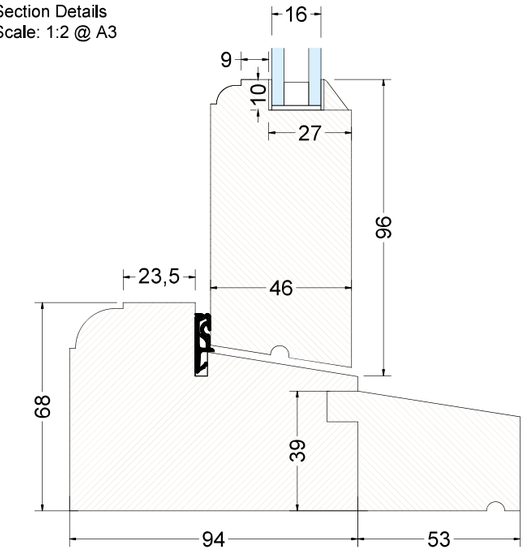

Job Reference:	Dymott
Made By Date:	TBC
Location:	W5 GF Side Center
Quantity:	1
Timber Type:	Accoya

Casement Frame Detail:

Frame Mould:	13R Ovolo
Frame Profile:	94mm
Frame Head:	60mm
Frame Jambs:	60mm
Frame Cill:	68mm
Sill Mould:	13R Ovolo
Add On Sill:	53mm
Frame Mullion:	68mm
Frame Transom:	N/A
Transom Height:	N/A
Trickle Vent:	N/A Listed

Casement Section Detail:

Casement Mould:	6.5R Ovolo
Casement Profile:	46mm
Casement Head:	55mm
Casement Stiles:	55mm
Casement Bottom Rail:	96mm
Fan Bottom Rail:	N/A
Glazing Bars:	25/ 6.5 Ovolo

Casement Hardware:

Ironmongery Finish: Black

2 x Monkey Tail Casement Fasteners
2 x 12" Monkey Tail Casement Stays
6 x 3" Ball Bearing Butt Hinges
2 x Locking Security Lock & Keys

Glass Specification:

Unit Make Up: 4-8-4 Heritage

Unit Build Up:

4mm Low Iron Toughened Inner Pane - 8mm
White Spacer, Krypton Gas - 4mm Softcoat
Toughened Outer Pane - Individually Glazed

Paint Specification:

Frame:
Internally: White Satin
Externally: White Satin

Sash:
Internally: White Satin
Externally: White Satin

Notes:
- Drawings to show the proposed double casement with both sashes opening.
- Sashes are to have 16mm Heritage slimline units with 25mm integral glazing bars.
- This window must be installed externally.

Drawing Status:

Initial:
- Drawing Submitted 28/04/2025.

MIDHURST Windows and Doors

PROPOSED

W6 - GF Side LH Single Casement
As Viewed **Externally**
Scale: 1:20 @ A3

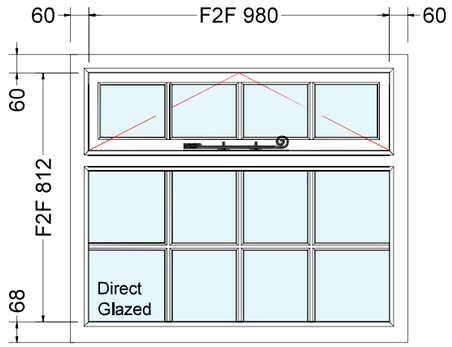

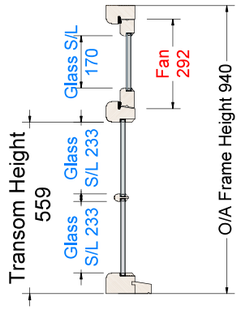

W6 - GF Side LH Single Casement
As Viewed **Externally**
Scale: 1:20 @ A3

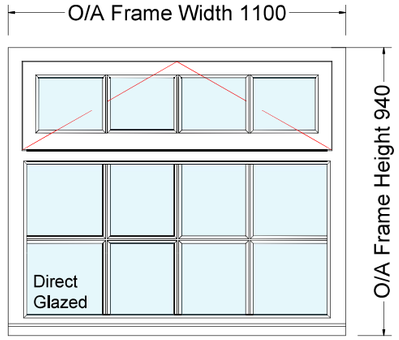

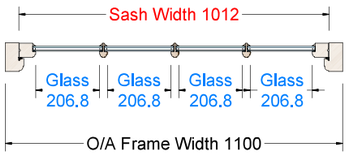

Casement Frame Head & Sash Head
Section Details
Scale: 1:2 @ A3

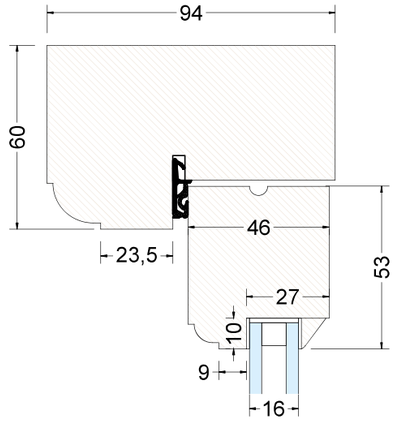

Casement Frame Transom & Sash
Section Details
Scale: 1:2 @ A3

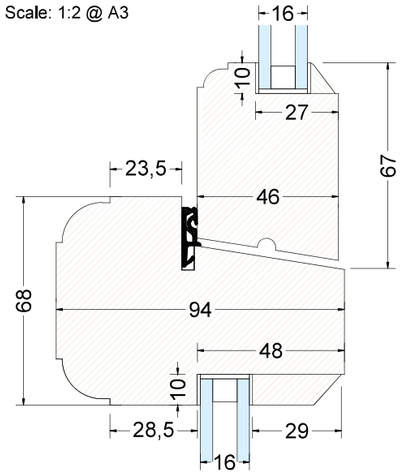

Casement Jamb & Sash Stile
Section Details
Scale: 1:2 @ A3

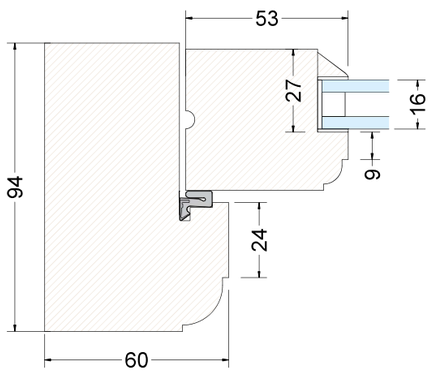

Glazing Bar
Section Details
Scale: 1:2 @ A3

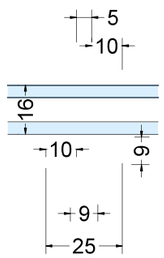

Casement Jambs - Direct Glazed
Section Details
Scale: 1:2 @ A3

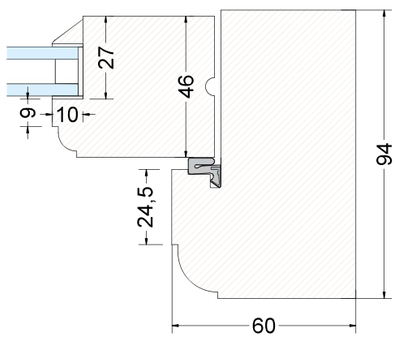

Casement Frame Cill
Section Details
Scale: 1:2 @ A3

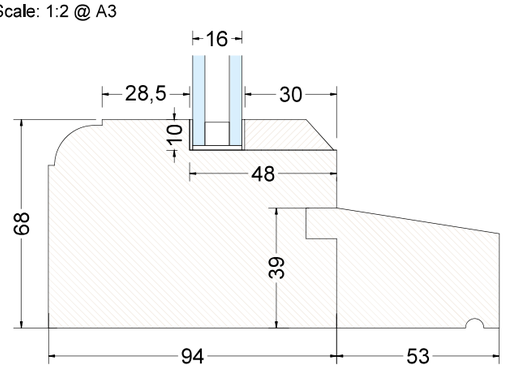

Job Reference:	Dymott
Made By Date:	TBC
Location:	W6 GF Side LH
Quantity:	1
Timber Type:	Accoya

Casement Frame Detail:

Frame Mould:	13R Ovolo
Frame Profile:	94mm
Frame Head:	60mm
Frame Jambs:	60mm
Frame Cill:	68mm
Sill Mould:	13R Ovolo
Add On Sill:	53mm
Frame Mullion:	N/A
Frame Transom:	68mm
Transom Height:	559mm
Trickle Vent:	N/A Listed

Casement Section Detail:

Casement Mould:	6.5R Ovolo
Casement Profile:	46mm
Casement Head:	55mm
Casement Stiles:	55mm
Casement Bottom Rail:	N/A
Fan Bottom Rail:	67mm
Glazing Bars:	25/ 6.5 Ovolo

Casement Hardware:

Ironmongery Finish: Black

1 x 12" Monkey Tail Casement Stays

3 x 3" Ball Bearing Butt Hinges

1 x Locking Security Lock & Keys

Glass Specification:

Unit Make Up: 4-8-4 Heritage

Unit Build Up:

4mm Low Iron Toughened Inner Pane - 8mm

White Spacer, Krypton Gas - 4mm Softcoat

Toughened Outer Pane - Individually Glazed

Paint Specification:

Frame:
Internally: White Satin
Externally: White Satin

Sash:
Internally: White Satin
Externally: White Satin

Notes:
- Drawings to show the proposed single casement with a top hung fanlight and direct glazed bottom section.
- Sashes are to have 16mm Heritage slimline units with 25mm integral glazing bars.
- This window will be supplied with an external add on sill to match the existing window.
- This window must be installed externally.

Drawing Status:

Initial:
- Drawing Submitted 28/04/2025.

REV 2:
- Drawing Submitted 11/09/2025.

REV 3:
- Drawing Submitted 03/10/2025.

MIDHURST Windows and Doors