S3 04 1:100
MARINE PARADE GROUND FLOOR EXTENT

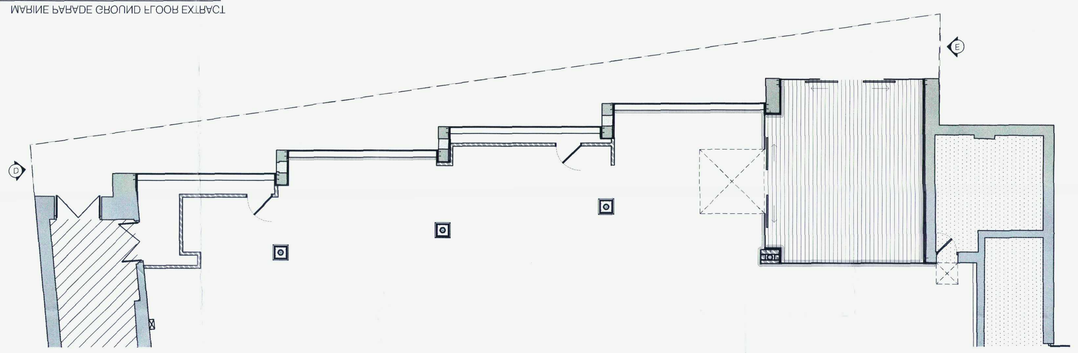

S3 03 1:100
MARINE PARADE ELEVATION

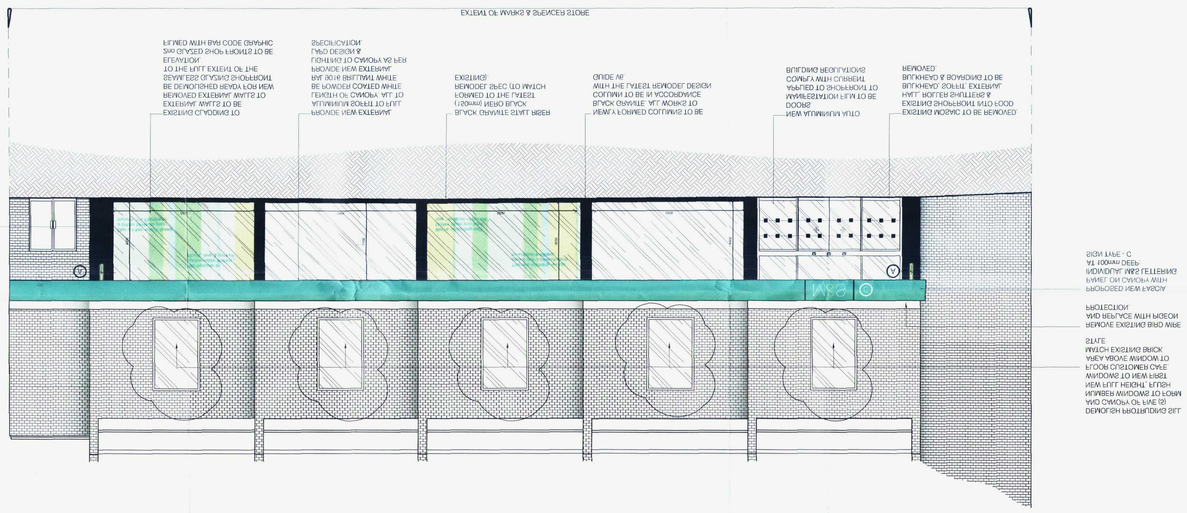
EXTENT OF MARKS & SPENCER STORE
EXISTING CANOPY TO BE REMOVED
NEW CANOPY TO BE INSTALLED
EXISTING CANOPY TO BE REMOVED
EXISTING CANOPY TO BE REMOVED
EXISTING CANOPY TO BE REMOV