EXISTING WINDOWS

BEDROOM 1 WITH RETURN

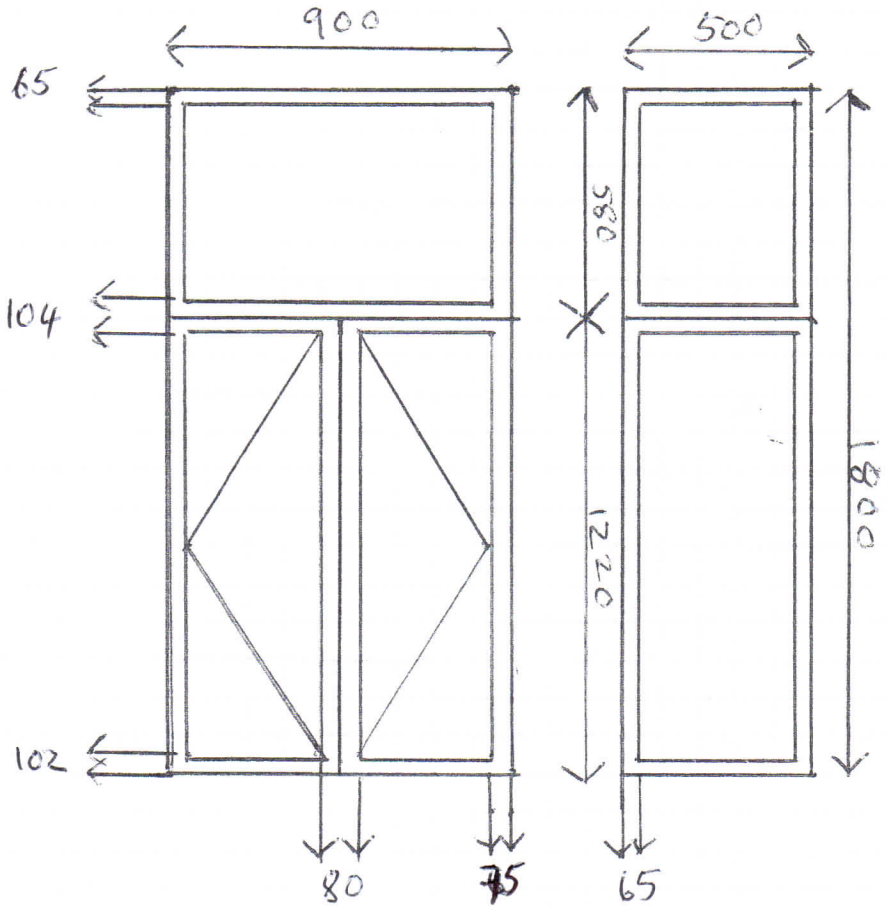

CURRENT OPENINGS THE SAME AS PROPOSED OPENINGS

BEDROOM 2 BAY

