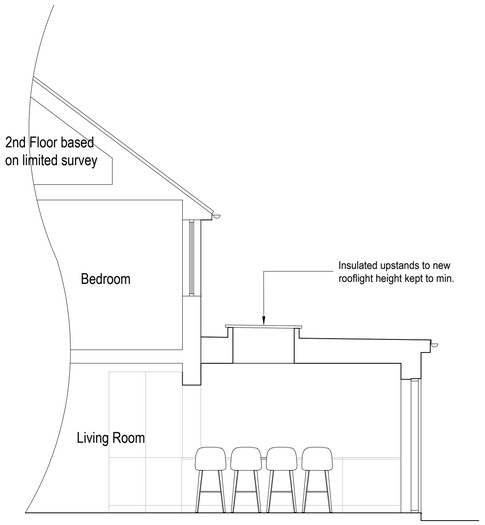

Proposed Section A-A 1:50

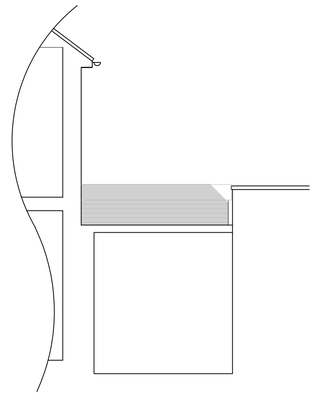

Proposed Section B-B 1:50

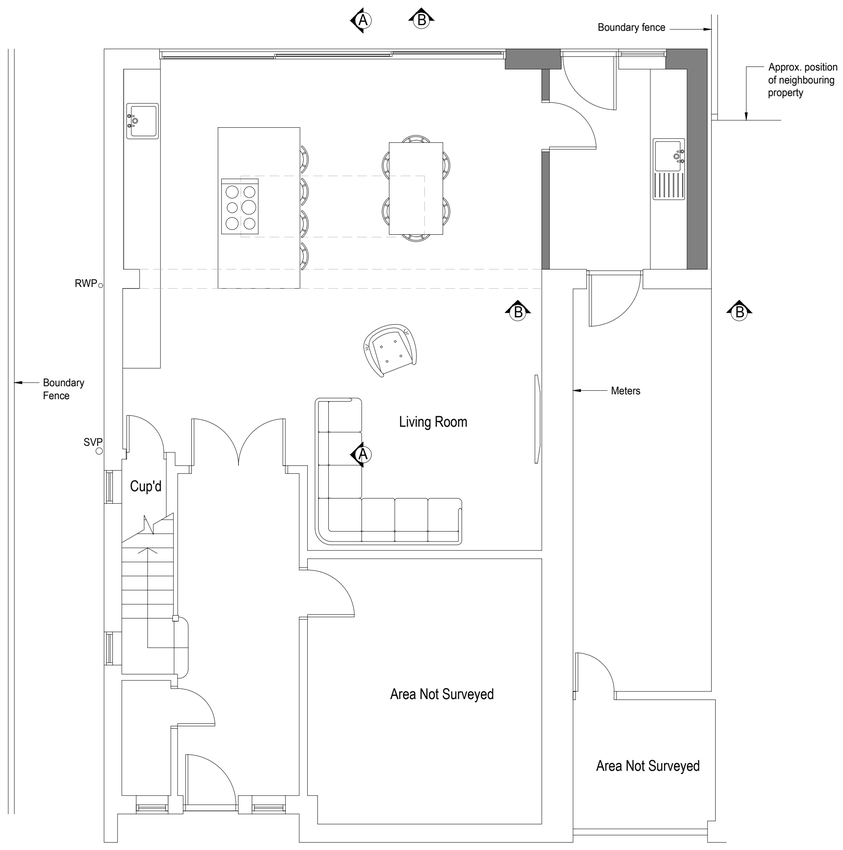

Proposed Partial Ground Floor Plan 1:50



Proposed Rear (East) Elevation 1:100

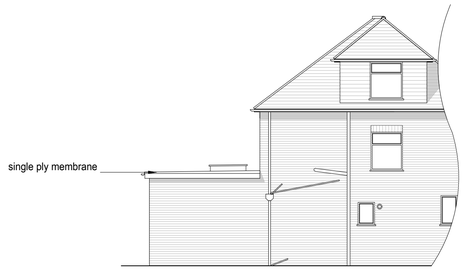

Proposed Partial (North) Side Elevation 1:100

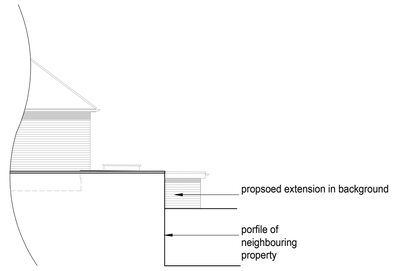

Proposed Partial Side (South) Sectional Elevation 1:100



Block plan 1:500

1:500 0 10 20 30 40 50m

1:100 0 1 2 3 4 5 6 7 8 9 10m

1:50 0 1 2 3 4 5 6 7 8 9 10m

amendments

bpm Architectural Services Ltd.

client: Jeff Kelly

project: 26 The Boulevard
Worthing
East Sussex
BN13 1LB

project ref: 2811 Drawing No. 02

drawing title: Proposed plans , elevations and sections

drawn by: D Haslam

date: MAR 23 scale: 1:50/100@ A1

www.bpmnet.co.uk
info@bpmnet.co.uk

check all dimensions on site before all work is commenced

All goods materials workmanship to conform with current building regs BSS and COP's