

PART SIDE SOUTH ELEVATION

EXISTING ELEVATION

Scale 1:100

0m 5m 10m

Scale Bar – 1:100



PART SIDE SOUTH ELEVATION

PROPOSED ELEVATION

Scale 1:100

0m 5m 10m

Scale Bar – 1:100

SCHEDULE OF MATERIALS

PATIO DOORS - NEW ALUMINIUM DOORS COLOUR WHITE

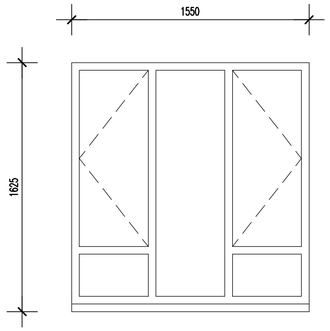

WINDOW A

EXISTING WINDOW

Scale 1:20

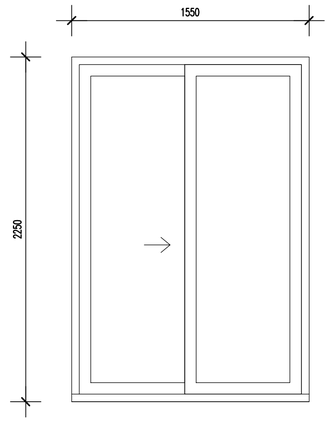

DOOR A

PROPOSED DOOR

Scale 1:20

0mm 500mm 1000mm 1500mm 2000mm

Scale Bar – 1:20

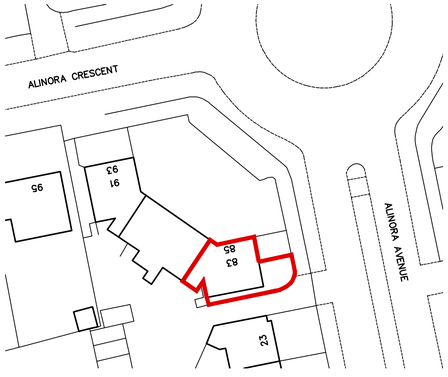

BLOCK PLAN

Scale 1:500

0m 10m 20m 30m 40m 50m

Scale Bar – 1:500



DOOR BLOCK PLAN

Scale 1:200

0m 5m 10m 15m 20m

Scale Bar – 1:200

No dimensions to be scaled from drawing except for planning purposes.

The contractor should check all dimensions on site.

It is the contractors responsibility to ensure compliance with Building Regulations.

C.D.M. Regs. 2015. The Client is advised of his responsibilities to appoint a Planning Supervisor under these Regs. All works to comply with the C.D.M. Regs. 2015.

The Party Wall Act. 1996 The property owner is advised of the requirements of the Act, & the requirement to serve a Party Wall Notice on any adjoining owners as required under the act.

REVISIONS:

-

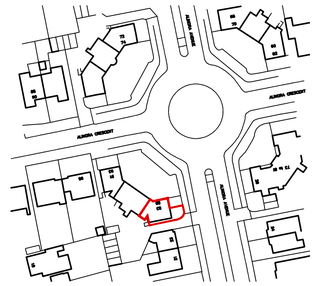

LOCATION PLAN

Scale 1:1250

0m 10m 20m 30m 40m 50m

Scale Bar – 1:1250

Information supplied based on Promap. All dimensions and distances subject to an accurate site survey being undertaken.

ADCS
Architectural Design
Computer Services

30 Foxley Lane
Worthing
West Sussex
BN13 3AD
Tel: 01903 260701
E-mail:
adcs@sky.com

Client

MRS C. MARDELL

Project PROPOSED EXTERNAL ALTERATION
83 ALINORA CRESCENT
GORING BY SEA
WEST SUSSEX BN12 4HH

Drawing

EXISTING & PROPOSED ELEVATIONS & BLOCK PLAN

Scale	Date	Drawn
1:50 & 1:100 @ A1	03.06.24	TP

Drawing No. 1610/P01

Revision