Quotation

Date **11 June 2024**
Page **1 of 7**
Items **4**

Hachenberg

Reference **BSL20486-LH**

Please find the designs below (frames are viewed from the outside). Please note the dimensions shown will vary slightly after a technical survey has been completed.

Bay 1
External: 2734 x 1057, Internal: 2520 x 1000

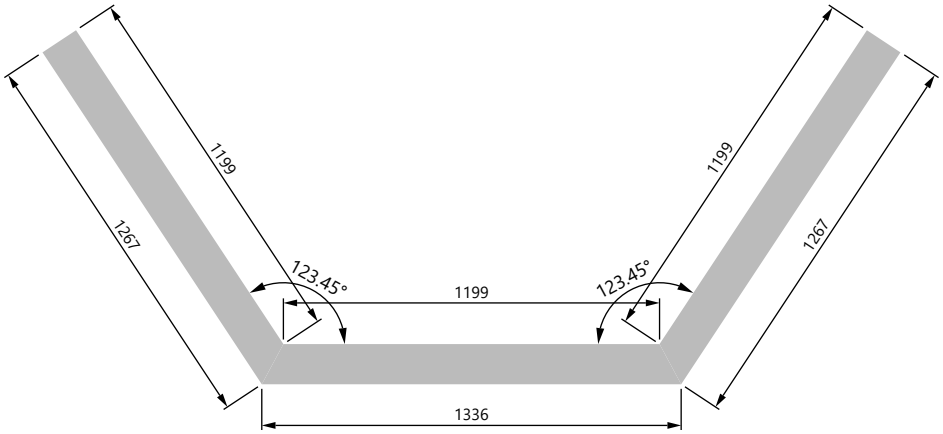

(VS) Travel Restrictors White

Bay 1
View 1



Bay 1 - Frame 1
1230 x 1700

Frame



uPVC Vertical Slider Window
Vertical Slider (Run-Through Horns)
Run through horns



External
White



Internal
White



Frame profile
PVCu Vertical Slider



Threshold profile
PVCu Vertical Slider

Sill
150mm upstand

Glazing

(VS) Clear Energy Efficient, Double Glazing



Grid Georgian Bar VS (Withing Glazing - Between Panes) | White / White

24mm Argon Filled with Warm Edge
Spacer Bar 4/16/4 | Warm edge - Black

Hardware

Sash knob
Classic
White



Sash lift
Sash Lift
White



Sash lock
Standard
White

Trickle vent
VS 3000
White/White

Bay 1 - Frame 2
1261 x 1700

Frame



uPVC Vertical Slider Window
Vertical Slider (Run-Through Horns)
Run through horns



External
White



Internal
White



Frame profile
PVCu Vertical Slider



Threshold profile
PVCu Vertical Slider



Bay post
Bay post (VS)

Sill
150mm upstand

Glazing

(VS) Clear Energy Efficient, Double Glazing



Grid Georgian Bar VS (Withing Glazing - Between Panes) | White / White

24mm Argon Filled with Warm Edge
Spacer Bar 4/16/4 | Warm edge - Black

Hardware

Sash knob
Classic
White



Sash lift
Sash Lift
White



Sash lock
Standard
White

Trickle vent
VS 3000
White/White

Bay 1 - Frame 3
1230 x 1700

Frame

uPVC Vertical Slider Window
Vertical Slider (Run-Through Horns)
Run through horns

External
White

Internal
White

Frame profile
PVCu Vertical Slider

Threshold profile
PVCu Vertical Slider

Bay post
Bay post (VS)

Sill
150mm upstand

Glazing

(VS) Clear Energy Efficient, Double Glazing
Grid Georgian Bar VS (Withing Glazing - Between Panes) | White / White

24mm Argon Filled with Warm Edge
Spacer Bar 4/16/4 | Warm edge - Black

Hardware

Sash knob
Classic
White

Sash lift
Sash Lift
White

Sash lock
Standard
White

Trickle vent
VS 3000
White/White

Bedroom 1 - Copy
1750 x 1180

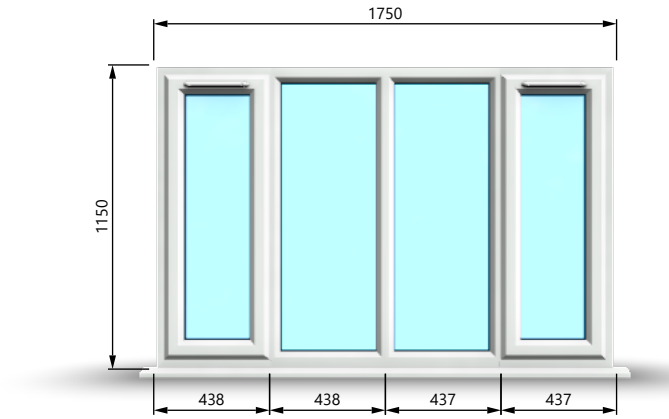

Frame

uPVC Casement Window
Style 84

External
White

Internal
White

Frame profile
57mm Energy Chamfered Multi-Chamber Profile

Sill
150mm

Glazing

Energy Efficient, Double Glazing
28mm Argon Filled with Warm Edge
Spacer Bar 4/20/4 | Warm edge - Black

Hardware

Trickle vent
2500 (Sash)
White/White

Window handle
Cranked
White

Kitchen - Copy
1350 x 1000

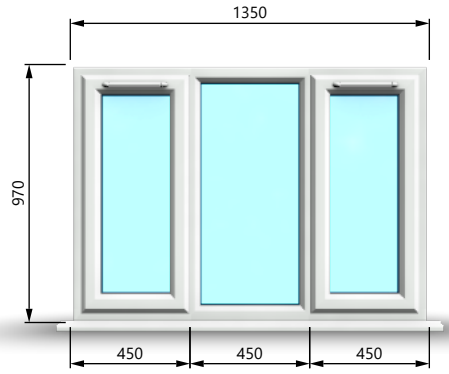

Frame

uPVC Casement Window
Style 36

External
White

Internal
White

Frame profile
57mm Energy Chamfered Multi-Chamber Profile

Sill
150mm

Glazing

Energy Efficient, Double Glazing
28mm Argon Filled with Warm Edge Spacer Bar 4/20/4 | Warm edge - Black

Hardware

Trickle vent
2500 (Sash)
White/White

Window handle
Cranked
White

Bedroom 2 - Copy
1760 x 1160

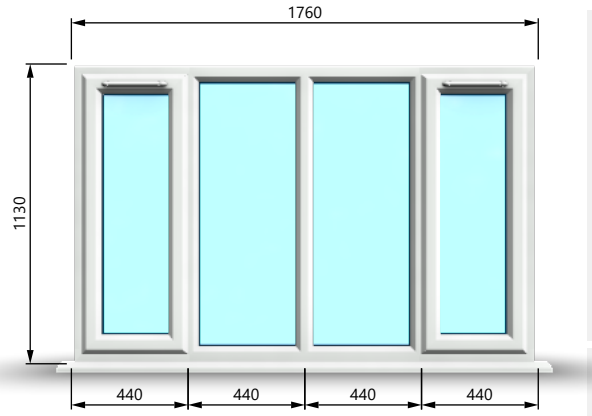

Frame

uPVC Casement Window
Style 84

External
White

Internal
White

Frame profile
57mm Energy Chamfered Multi-Chamber Profile

Sill
150mm

Glazing

Energy Efficient, Double Glazing
28mm Argon Filled with Warm Edge Spacer Bar 4/20/4 | Warm edge - Black

Hardware

Trickle vent
2500 (Sash)
White/White

Window handle
Cranked
White