A3 PAPER SIZE

0m 1m 2m 3m 4m 5m 6m 7m 8m 9m 10m

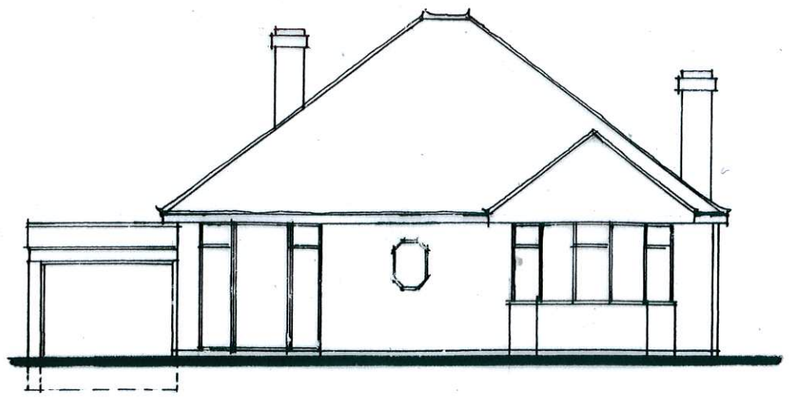

North Elevation



East Elevation

Existing Elevations - scale: 1/100



South Elevation

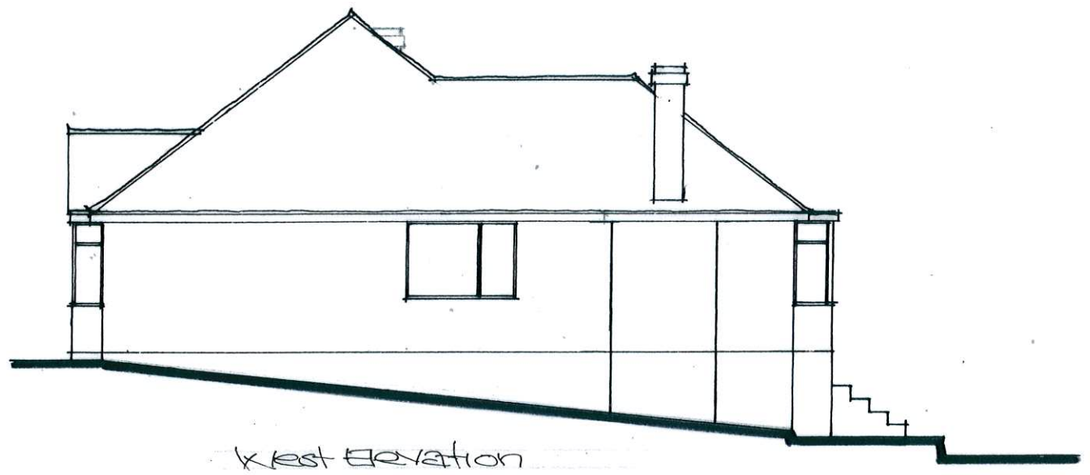

West Elevation

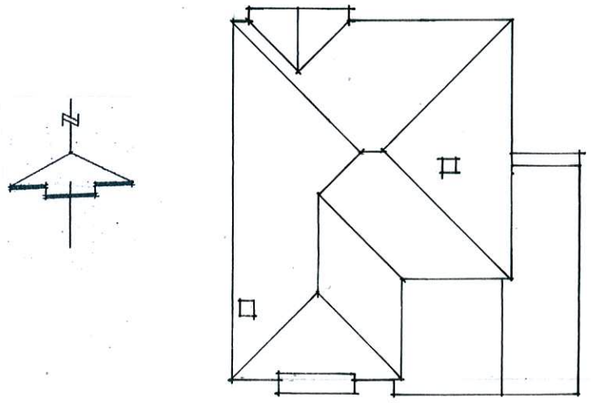

Existing Roof Plan scale: 1/200

0m 1m 2m 3m 4m 5m 6m 7m 8m 9m 10m

Paul Trussler
44 Firle Road
Lancing
West Sussex
BN15 0NZ

23 FIRLE ROAD
LANCING
WEST SUSSEX BN15 0NY

Drawing No. 22/23/2