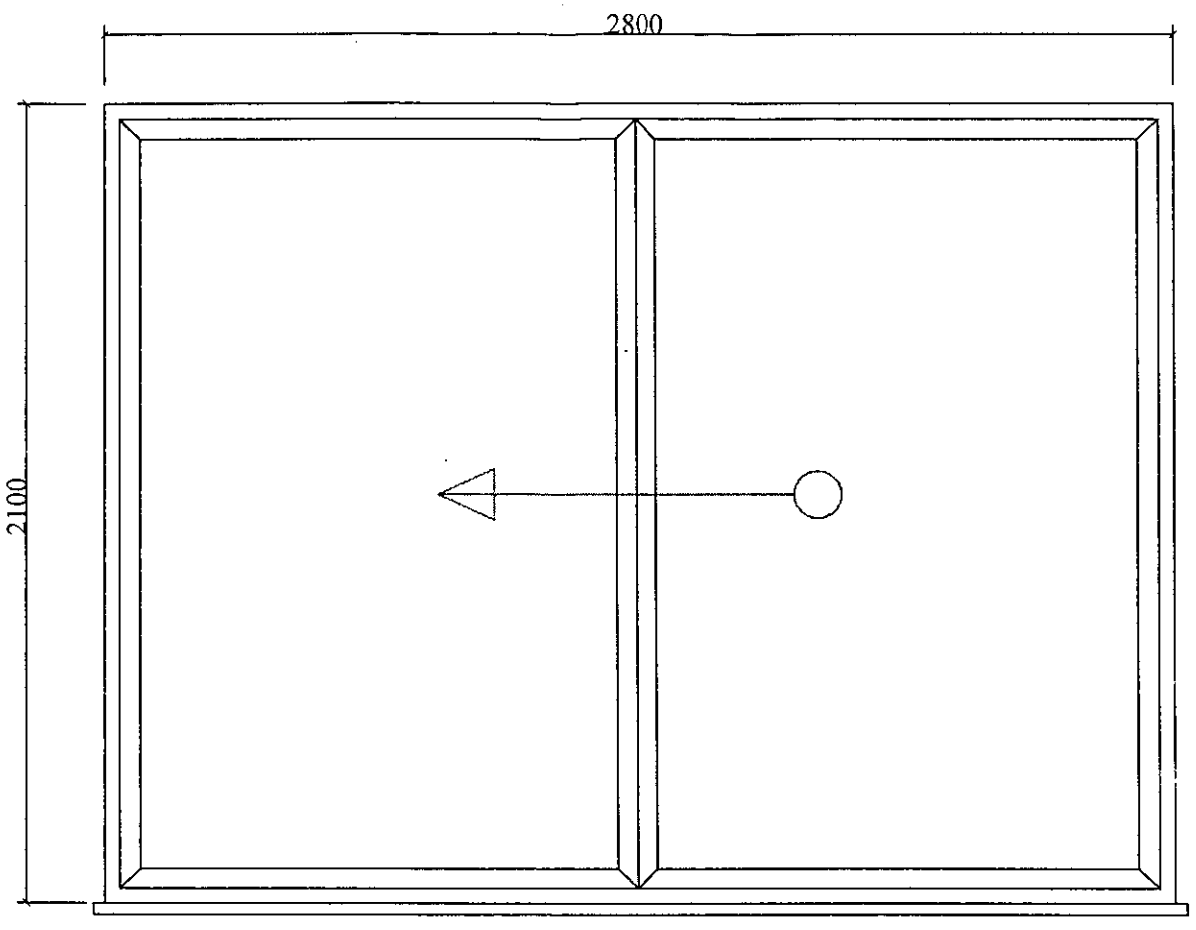

Existing Metal Framed Patio Doors 17
Scale 1:20

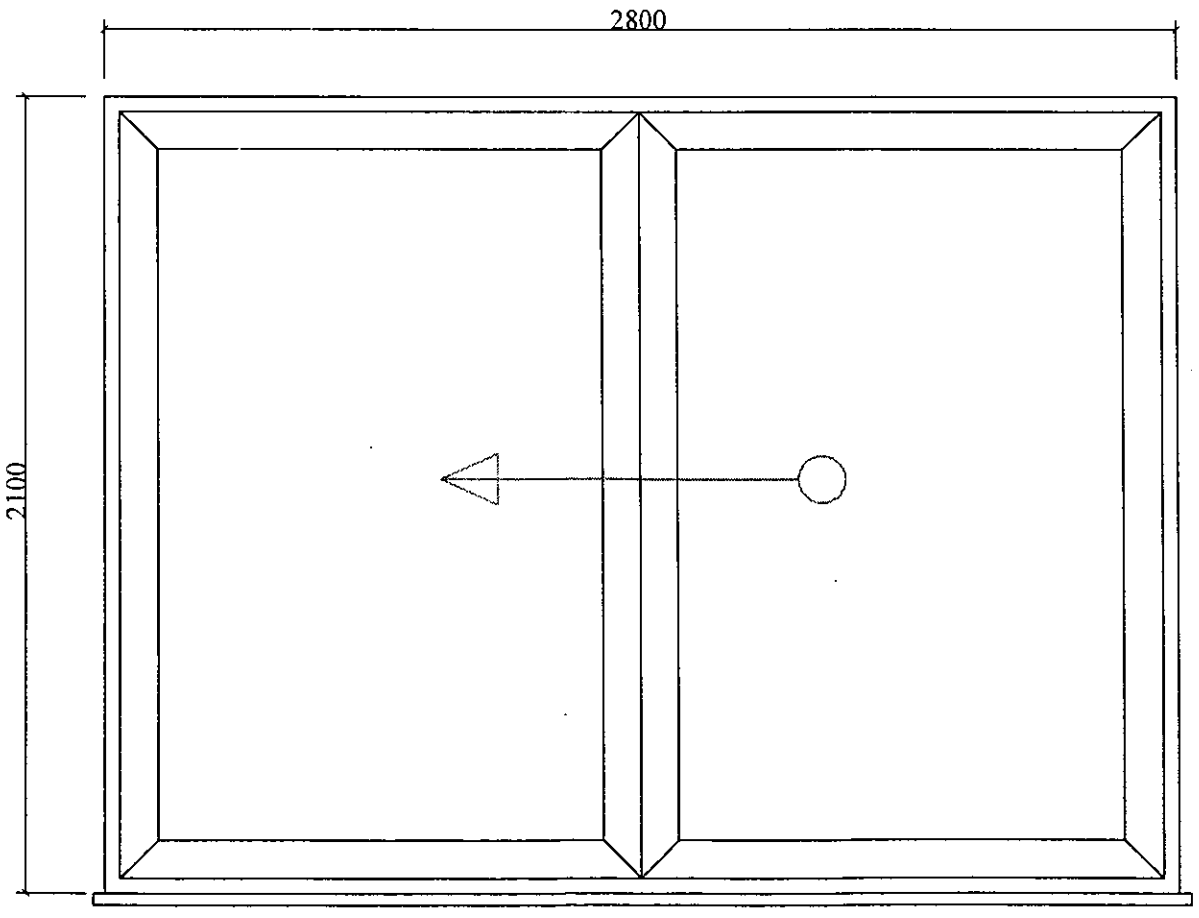

Proposed White UPVC Patio Doors 17
Scale 1:20

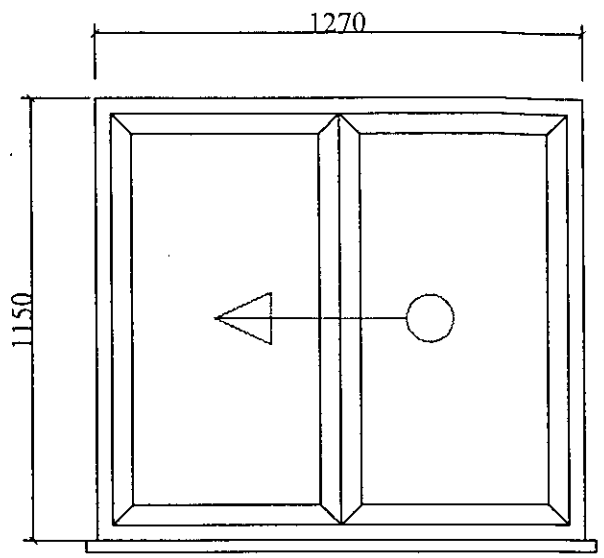

Existing Metal Framed Windows 18 to 21
Scale 1:20

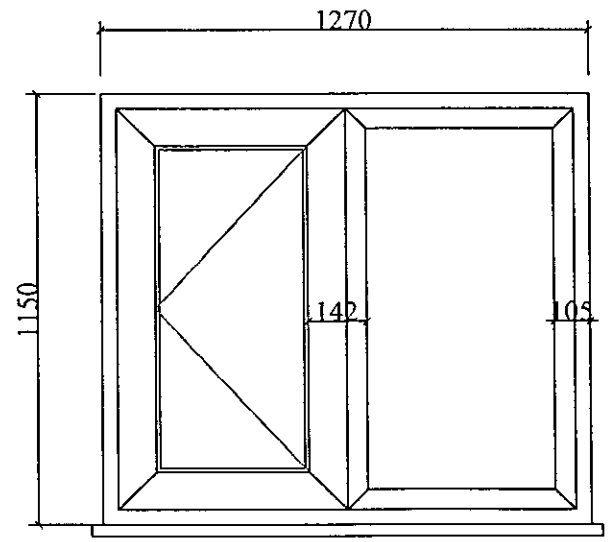

Proposed White UPVC Window 18 to 21
Scale 1:20

T.P. OFFICE COPY

BOROUGH OF WORTHING
DEPOSITED 8/6/09
TP REF No.
WB/ 09/0423/FULL

WORTHING BOROUGH COUNCIL
27 JUL 2009
CONSENT GRANTED
SUBJECT TO CONDITIONS

- All dimensions must be checked on site and not scaled from this drawing, apart from by Local Authority.

- No work is to be commenced until full Planning Permission/ Building Regulations have been approved and any conditions discharged. Any work started prior to approval is entirely at clients/ contractors risk.

- The contractor is responsible for taking and checking all levels, dimensions etc. prior to ordering materials and starting work. Any discrepencies are to be reported back to Roberts & Wrigley Associates prior to commencement of works.

- Where approval of materials by Local Authority is a condition of the Planning Concent, samples must be supplied to the relevant officer or approved in writing before relevant works are commenced.

-All building work is to be carried out to the satisfaction of the local authority building control officer & in accordance with the current building regualtions and as such additional unforseen building works may be required on site.

- It is the responsibity of the building owner, or tennant, to comply with the requirements of 'The Party Wall Act 1996' in respect of excavation and construction in proximity to certain buildings or structures; and for connected purposes.

- It is the responsibility of the building owner to notify Roberts & Wrigley of any public sewers which may pass through, or near to the property, as a sewer survey will not be purchased unless we are notified of their presence.

-Drawings have been produced for Planning Permission / Building Regulations submissions only and do not constitute full working drawings.

-All drawings are copyright of Roberts & Wrigley Associates & may not be copied by and third party without prior written consent.

R&W Associates

ROBERTS & WRIGLEY ASSOCIATES
27A BORING ROAD, BORING BY SEA, WEST SUSSEX, BN12 4AR
TEL: 01903 240169 EMAIL: rwassociates@tiscali.co.uk

CLIENT: MRS ADAMS

Company:

Site Address: FLAT 19 BALMORAL COURT
GRAND AVENUE
WORTHING
BN11 5AX

DRAWING TITLE: PROPOSED REPLACEMENT WINDOWS.

DRAWN: JAMES ROBERTS

DATE: 6TH MAY 09

SCALE: 1:20

JOB No.

DRAWING No.: DRAWING 1
PROPOSED & EXISTING WINDOW SCHDULE

All Dimensions of existing buildings/ boundarys to be verified on site by contractor, with any discrepencies reported back before commencement of work.
This drawing is the copyright of Roberts & Wrigley Associates and shall not in any way be used or reproduced without written consent.

REV. Date
REV. Date
REV. Date