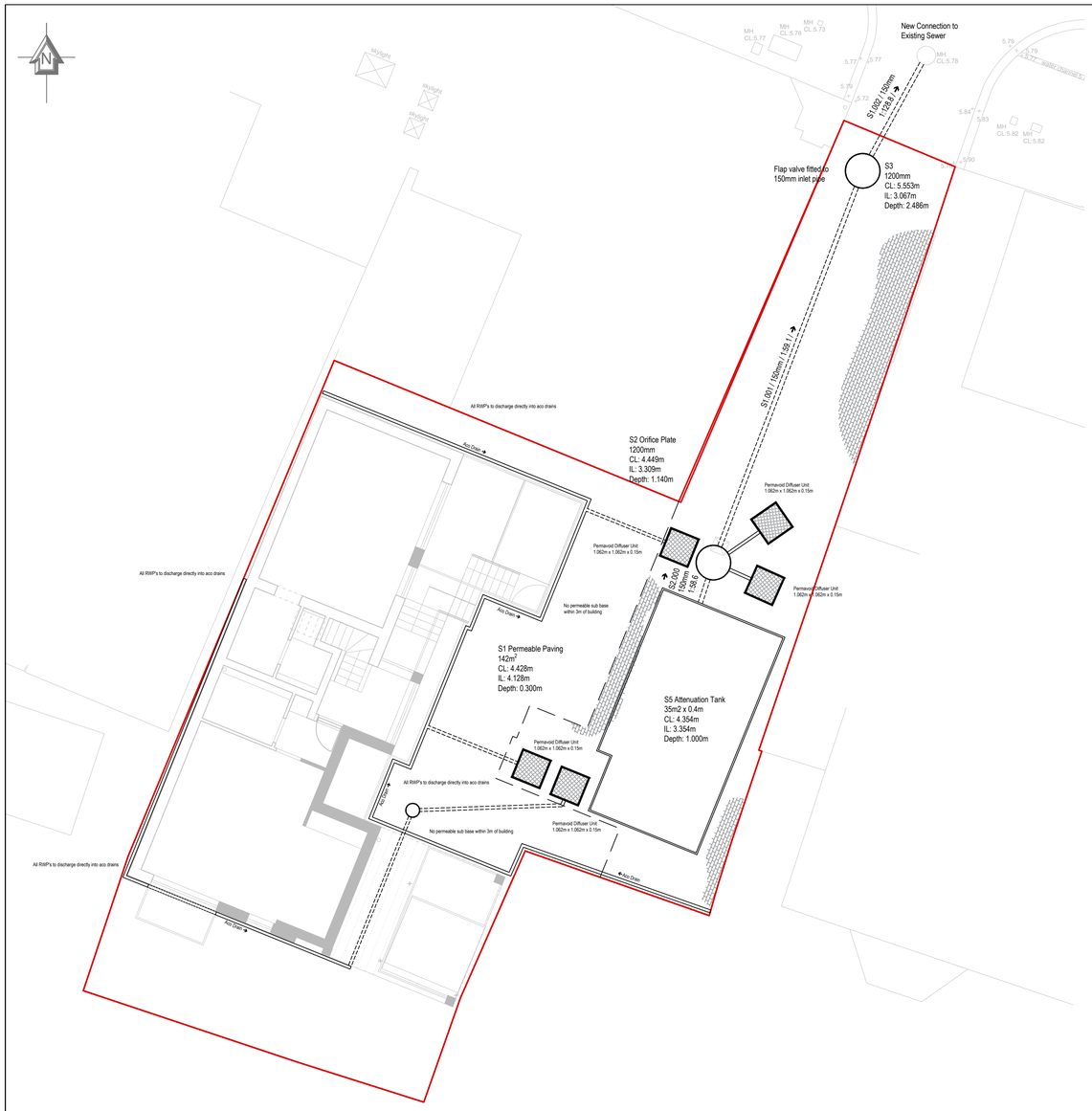

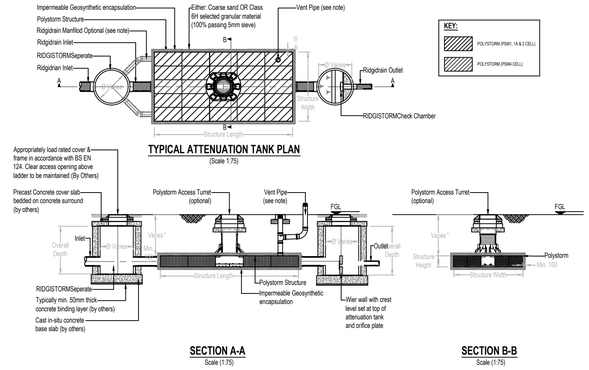

Lined Permeable Paving . No infiltration

Not to scale

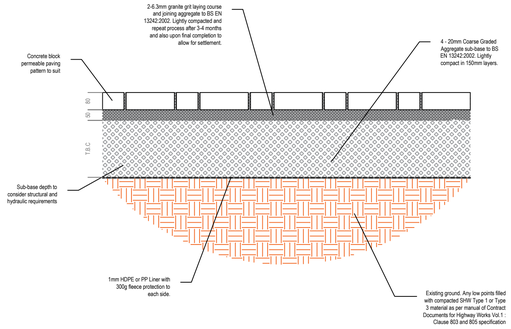

Manhole Schedule

Node ID	Easting (m)	Northing (m)	CL (m)	Depth (m)	Dia (mm)	Width (mm)	Node Type	Manhole Type	Connections	Link ID	IL (m)	Dia (mm)	Link Type
1	521479.610	104978.984	4.428	0.300	1200		Manhole	Adoptable	0				
									0	1.000	4.128	150	Circular
2	521484.172	104982.051	4.449	1.140	1200		Manhole	Adoptable	1	1.000	3.309	150	Circular
									2	2.000	3.309	150	Circular
									0	1.001	3.309	150	Circular
3	521489.263	104995.415	5.553	2.486	1200		Manhole	Adoptable	1	1.001	3.067	150	Circular
									0	1.002	3.067	150	Circular
4	521490.939	104998.463	5.783	2.743	1200		Manhole	Adoptable	1	1.002	3.040	150	Circular
5	521484.286	104979.416	4.354	1.000	1200		Manhole	Adoptable	0				
									0	2.000	3.354	150	Circular

Pipe Schedule

Link ID	Length (m)	Slope (1:X)	Dia (mm)	Link Type	US CL (m)	US IL (m)	US Depth (m)	DS CL (m)	DS IL (m)	DS Depth (m)	US Node ID	Dia (mm)	US Width (mm)	US Node Type	Dia (mm)	DS Width (mm)	DS Node Type	DS Manhole Type
1.000	5.497	6.7	150	Circular	4.428	4.128	0.150	4.449	3.309	0.990	1	1200		Manhole	1200		Manhole	Adoptable
1.001	14.301	59.1	150	Circular	4.449	3.309	0.990	5.553	3.067	2.336	2	1200		Manhole	1200		Manhole	Adoptable
1.002	3.478	128.8	150	Circular	5.553	3.067	2.336	5.783	3.040	2.593	3	1200		Manhole	1200		Manhole	Adoptable
2.000	2.637	58.6	150	Circular	4.354	3.354	0.850	4.449	3.309	0.990	5	1200		Manhole	1200		Manhole	Adoptable

TYPICAL CLASS D 400 COVER DETAIL

Not to scale

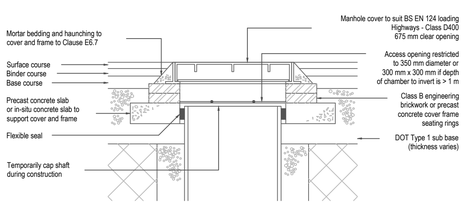

Note: Where the access chamber is in the highway the Highway Authority can have specific requirements

FIGURE B.12
TYPICAL MANHOLE DETAIL - TYPE 2
Maximum depth from cover level to soffit of pipe 3.0 m
Not to scale

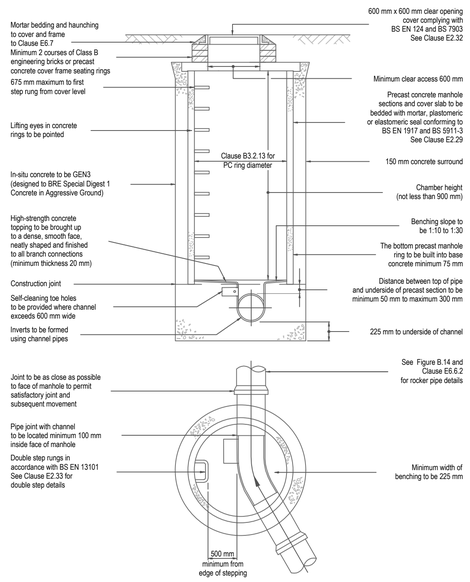

Notes:

1. All levels relate to Ordnance Datum from site survey information provided by Client (Ellen White).
2. The developer must self-vet and certify that the design criteria, material standards and workmanship specifications for the proposed adoptable sewers are in accordance with those set out in "Sewers for Adoption" 7th Edition, The Ministers Standards and the requirements of the Statutory Sewerage Undertaker.
3. E232 Manhole Cover and Frames.
4. Manhole covers and frames shall comply with the relevant provisions of BS EN 124, BS 7903 and Highways Agency Guidance Document HA 104/09. They shall be of a non-rocking design which does not rely on the use of cushion inserts.
5. As a minimum, Class D400 covers shall be used in carriageways of roads (including pedestrian streets), hard shoulders and parking areas used by all types of road vehicles. Class D 400 should also be used for Manholes located on agricultural land due to heavy vehicular use.
6. Class B125 covers shall be used in footways, pedestrian areas and comparable locations.
7. All manhole covers shall be the non-ventilating type and shall have closed keyways.
8. All Pipes designed to be PVC-U in accordance with Sewers for Adoption 7th Edition. Approval from (Southern Water) prior to construction.
9. E2.22 Thermoplastics Structures Wall Pipe.
10. Thermoplastics structures wall sewer pipe shall comply with the relevant provisions of BS EN 13476-1 and WIS 4-35-01 and BS EN 13476-2 or BS EN 13476-3. Pipes shall be BSI kitemarked or have equivalent Third Party Certification.
11. Pipes less than or equal to 500mm in diameter shall have nominal short-term ring stiffness not less than 8kN per m2 (SN8) or be subject to a quality system for storage and embedment.
12. Nominal short term ring stiffness of 2kN per m2 (SN2) is acceptable for pipes greater than 500mm in diameter, subject to structural design load calculations which shall be provided to support this.
13. Transportation, handling, storage and laying shall be in accordance with the manufacturer's recommendations.
14. Where a fitting is installed on a sewer length, it shall have the same internal bore as the sewer. Maximum length of pipe for laying is 3m or 10 x DN, whichever is the greater, unless welded joints are used.
15. The contractor SHALL verify invert level of the proposed outfall PRIOR to commencement of drainage works and report levels to the Engineer for approval.
16. All manholes to be constructed to Southern Water standard adoptable details available online from http://www.southernwater.co.uk.
17. All pipes to have 150mm granular bed and surround 20mm clean stone or approved alternative.
18. Pipes with cover lower than 500mm will require reinforced concrete slab protection as per Figure B.25 SFA 7th Edition. Slab to have minimum 300mm bearing each side of pipe and shall consist of 150mm depth of GEN3 Sulphate Resisting concrete complying to E4.1 of SFA7 specification. Reinforcement to be two layers of A393 reinforcement laid with 40mm cover to the underside of the slab.
19. Where surface network crosses foul network use well compacted fill in between pipe crossings.
20. Design based on provided utility information. There may be other services onsite which are unknown that could affect the location apparatus.
21. Gully positions indicative and may require some adjustment with ground profile to suit manhole positions.
22. See Network Details for Attenuation Tank detail.

***NOT FOR CONSTRUCTION UNTIL APPROVED BY THE LEAD LOCAL FLOOD AUTHORITY**

KEY:

- Non Adoptable Surface Network
- Orifice
- Rain Garden
- Attenuation Tank
- Permeable Paving

CLIENT:

Ellen White

CIVIL ENGINEERING SOLUTIONS

Bryn Meurig, Lombard Street, Dolgellau
Gwynedd LL40 1DS

Tel: 01341 421 911
Email: info@ces.eu.com

SCHEME:

CES808 35 to 37 High Street, Shoreham SuDS Design

DRAWING TITLE:

CES808 General Arrangement & Standard Details

DRAWN BY: Henri Roberts	DATE DRAWN: 18/10/2023
CHECKED BY: Mark Roberts	DATE CHECKED: 18/10/2023
SHEET: 1 of 2	SCALES: 1:100/ As Shown

Drawing No. CES808/01/01 | REV A