Site Scheme Photo - Existing



Site Scheme Photo - Proposed

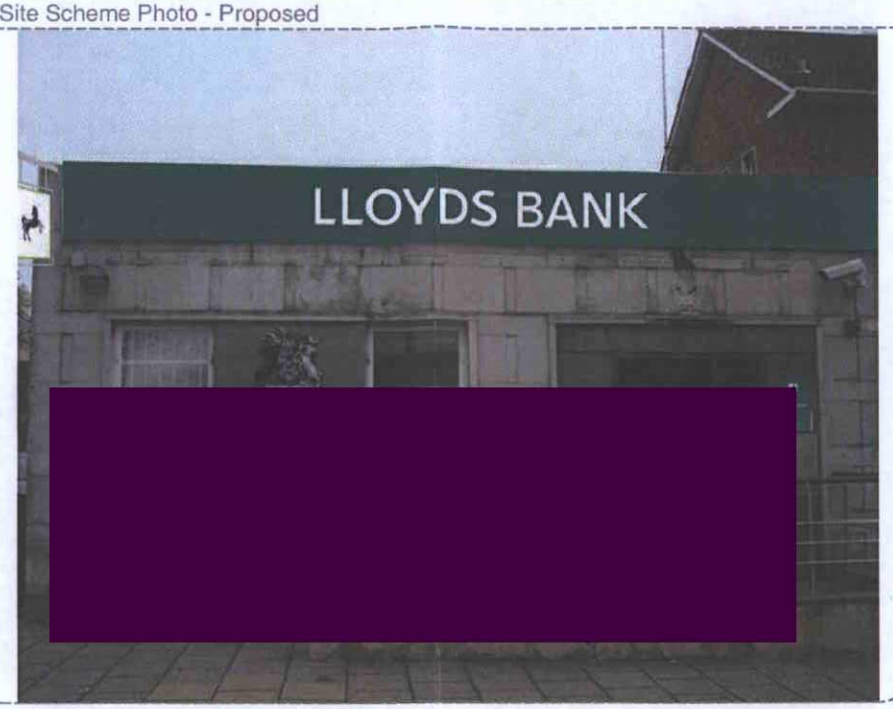

Site Plan

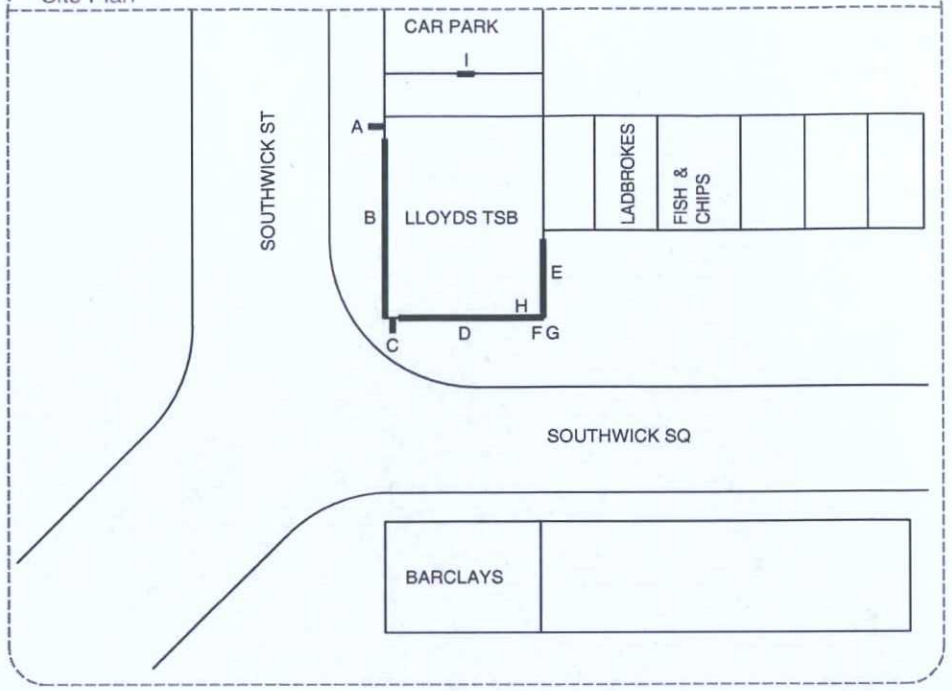

Signage Elevations



Sign D - Scale 1:50 @ A3

Note: 25mm folded panel made from 3mm aluminium panel dark core green

ADUR & WORTHING
PLANNING SERVICES
AWDM/ 0314/13
DATE VALID 13 MAR 2013



Sign B, D & E
Illuminated lettering, returns fabricated from aluminium powder coated 'Darker core green (Pantone 7483c)' with white acrylic faces.

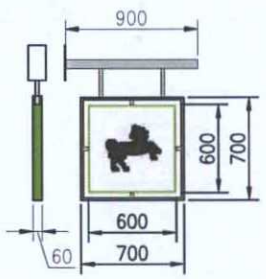

Sign A & C
Internally illuminated by LEDs projecting sign manufactured from folded aluminium powder coated 'Bright Green (Pantone 373C)'. Vinyl Horse artwork applied to fret-cut opal acrylic panel. Artwork to be set back by 6mm from panel border so that white keyline is visible when signage is illuminated

Squarel

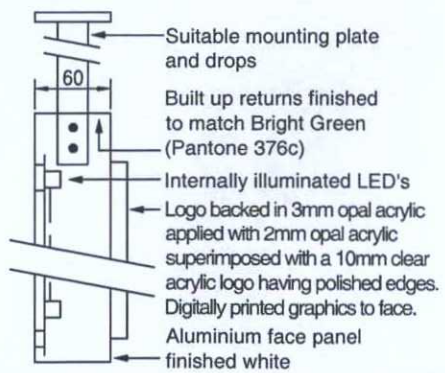

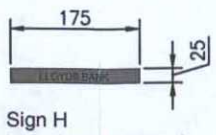

Sign H
Letterbox vinyl patch.
Scale 1:10 @ A3

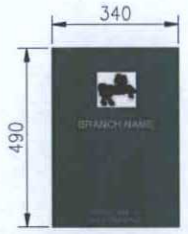

Sign F
Wall mounted name plate at 1400mm to centre from GL where possible
Scale 1:20 @ A3



Sign G
Internally applied digitally printed window vinyl.
Scale 1:20 @ A3

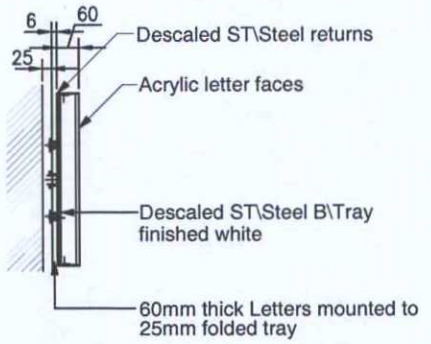

TYPICAL SECTION

Site address: Southwick, Brighton Southwick Square Brighton East Sussex BN42 4GP	Site Number: 50411700 2 of 3 Dwg Scale: as shown_@_A3 Date: 04/02/13 Drawn: DJF Revision: 115129DR-L/R1 Checked:	Revisions: L/R1 CEW 22/02/13 Lightstrips and squarel removed.	Notes:	Olympia House Lockwood Court Middleton Grove Leeds LS11 5TY United Kingdom Telephone: 0113 270 5595 Facsimile: 0113 277 1143 E-mail: postbox@futurama.ltd.uk

delivering branded environments™ futurama

© Copyright Design