

EXISTING ELEVATIONS. SCALE 1:100

1m 2m 3m 4m 5m 6m 7m 8m 9m 10m
1:100 Scale Bar

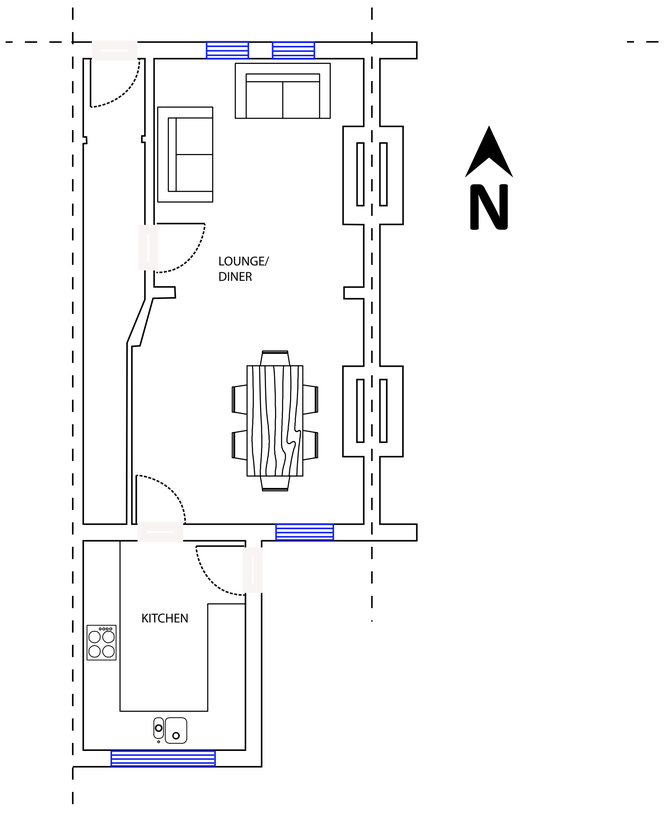

EXISTING GROUND FLOOR - SCALE 1:50

1m 2m 3m 4m 5m 6m 7m 8m 9m 10m
1:50 Scale Bar

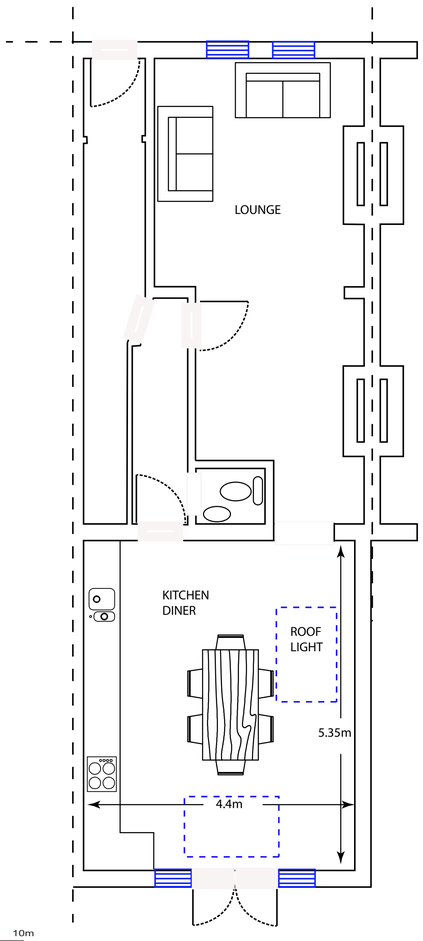

PROPOSED GROUND FLOOR - SCALE 1:50

ED63
ELEMENTAL DESIGN

20 Middle Road, Shoreham

Single Storey Extension.

General Building Spec.

Consult structural engineers calcs for beams, and timber sizes, to be checked and approved by Building Control. It is the builders responsibility to ensure this is done.

Extension Foundations: New foundations to be constructed to Local Authority approval and to suit site conditions. Minimum 1000mm deep and 500mm wide. 4:2:1 concrete min 450 thick.

Walls: External cavity walls with concrete blocks, rendered to match existing, with 50 cavity alongside 50 Celotex insulation, (or as specified by local building authority), then 100 Turbo block inner leaf. Internal 12mm carlite plaster. Secure to existing walls with furfix channels. Stainless steel butterfly wall ties at 450 c/c vertically and 900 c/c horizontally. Insulated cavity closers at reveals. Holding down straps every 2 metres fixed to wall plate and screwed to wall. Where existing walls are of cavity construction, a cavity tray should be provided where the wall abuts the roof.

Concrete Floor: 75 sand and cement screed (4:1) on 100 concrete (4:2:1) on 70 Celotex insulation on 1200 gauge polythene DPM on sand blinding on min 150 clean hardcore well compacted. 100 horizontal Hyload DPC min 150 above ground in outer leaf and at floor level in inner leaf.

Stud Walls:-

100x50 stud framing at 400 centres, infilled with sound insulation, with 12mm plasterboard, and 3mm skim finish internally

Extension roof- Flat: (Warm roof)- Bitumen bedded limestone chippings, (minimum 12.5mm deep), on three layers bitumen roofing felt to BS747 (or alternative suitable flat roofing system) on 18mm OSB decking on 120mm celotex, on 11mm OSB, on firring pieces (at 1:40) on 195 roof joists at 400 centres.

Electrical work: All electrical work required to meet the latest requirements of electrical Safety, must be designed, installed, inspected, and tested by a person competent to do so. Prior to completion, the Council must be satisfied that an appropriate electrical installation certificate has been issued for the work, and it has been signed by a person competent to do so.

Mechanical Ventilation: The proposed kitchen should be provided with mechanical extract ventilation rated at least 30 litres/second adjacent to the hob, or 60 litres/second elsewhere.

Sanitation: New toilet to be fed from existing mains water supply. Kitchen sink to be provided in food preparation area, with hot and cold water.

Drainage & waste disposal: New toilet to run in to existing drain, through new SVP. Soil Vent Pipe to terminate 900mm above any opening within 3m. Mechanical fans required to toilet 15l/s and WC 6l/s. New soakaway to be minimum 5m away from new extension, to be checked by Building Control Officer on site.

Conservation of fuel and power: Glazing to have U value 1.8W/m2 K. Install one energy efficient light fitting per 25 m2 floor area. New radiator(s) to be fitted with TRV's.

Energy efficient lights need to be provided at a rate of 75%.

Glazing: All glazing in critical locations to be of toughened or laminated safety glass in accordance with clause 5.3;BS 6206;1981. Habitable rooms to have a window opening of at least 1/20th of the floor area.

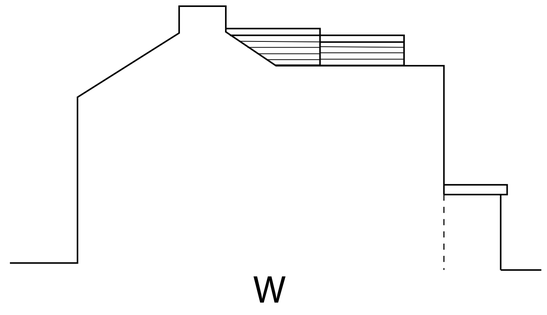

PROPOSED ELEVATIONS. SCALE 1:100

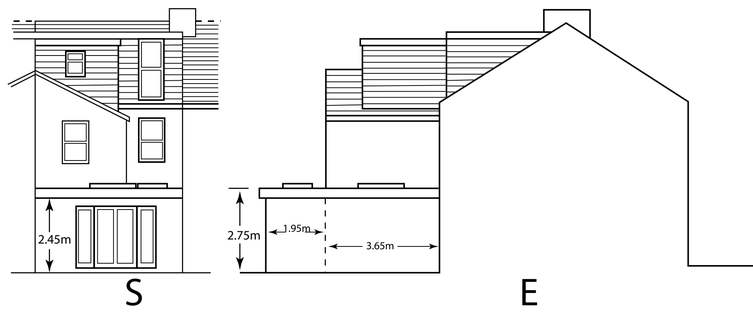

1m 2m 3m 4m 5m 6m 7m 8m 9m 10m
1:100 Scale Bar

Notes

1. No critical dimensions are to be scaled from this drawing. (except for planning purposes)
2. It is the contractor's responsibility to ensure that all work is carried out in accordance with Local Authority and N.H.B.C requirements and that all plumbing and electrical work complies with the current regulations of the area water board and electricity board.
3. Any works carried out prior to the receipt of the necessary approvals are the responsibility of the client.
4. Whilst every effort has been made to obtain accurate information on the existing structure or site, it is essential that the contractor or client check at every stage and notify the Designer of any discrepancies.

© copyright

ED63
ELEMENTAL DESIGN
elementaldesign63@gmail.com
07799 402 870
07754 093 904

Client: Mr Hunt

Job Title:
20 MIDDLE ROAD
SHOREHAM BY SEA

Drawing Title:
PROPOSED SINGLE STOREY REAR AND SIDE INFILL EXTENSION

Scale - 1:50 / 1:100

Date:-11-08-2020 | **Drawn by - A.Ramus**

Drg no.**-20MR.SSRE**

A1 - 841mm x 594mm