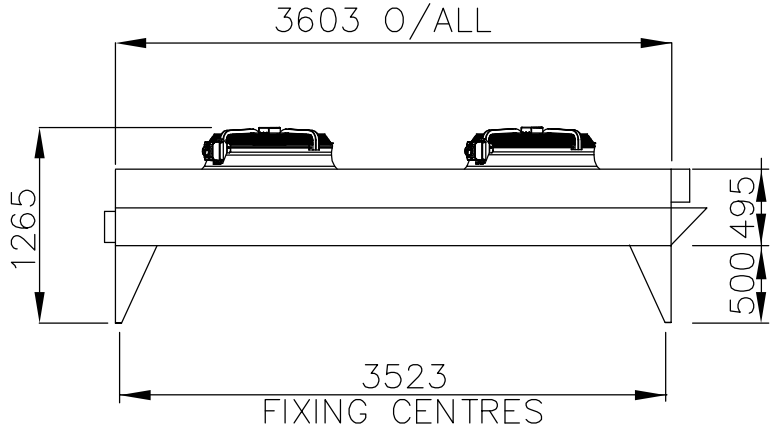

ELEVATION

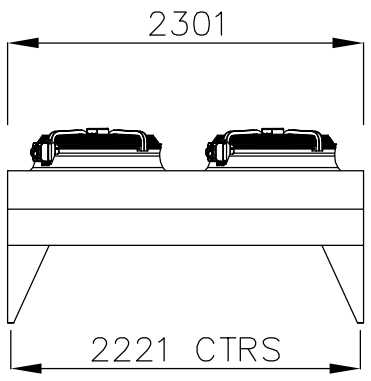

END
ELEVATION

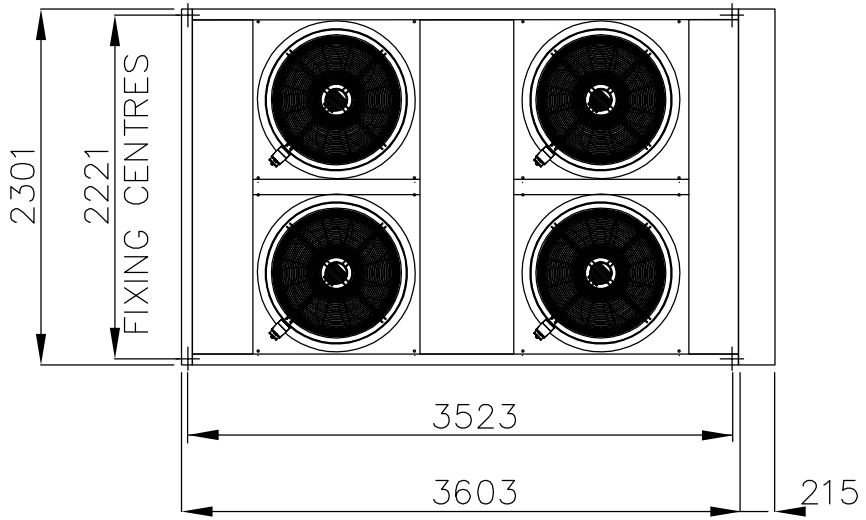

PLAN

MGC 223
–EC

MGC223H–EC
WEIGHT = 707kg
DAYTIME NOISE LEVEL 48dB (A)@ 10M
NIGHTTIME NOISE LEVEL 29dB(A)@ 10M