Worthing District Heating Pipe

Installation Methodology

This document and the information controlled therein is the property of Pinnacle Power. Reproduction or disclosure, by whatever means, in whole or part, is not permissible without prior consent of the above-named Company.

Pinnacle Power Ltd (0833164)
Castletown Office, Rockcliffe, Carlisle, Cumbria, United Kingdom, CA6 4BN

Document Number: 2380-PIN-DH-XX-MS-Y-0001
Revision: P03
Author: Peter Mildenstein/Stuart Foley

Rev	Date	Status	Description	Approved By
P01	30-08-22	For information		
P02	09-09-22	For use		
P03	01/06/23	Review		

Reviews:

Date	Comments	Reviewer

Table of Contents

1. INTRODUCTION 5
2. METHODOLOGY 5

2.1. Provisional Work 5

2.1.1. Feasibility Stage 5

2.1.2. Review of Statutory Utility Information 5

2.1.3. Consultation with Highways Authority for Traffic Management Master Planning .. 6

2.1.4. GPR Survey in Congested Areas 6

2.1.5. Trial Holes with Slit Trenching 6

2.2. Section 50 Application 6

2.3. Traffic Management 7

2.4. Site Setup 8

2.5. Excavation 9

2.6. Pipe Installation 10

2.7. Backfill and reinstatement. 11

2.8. Arboricultural Considerations 11

2.8.1. Arboricultural Method Statement (AMS) 12
2.8.2. Root Protection Areas (RPAs) 13
2.8.3. Protective Barriers 13
2.8.4. Ground Protection 14
2.8.5. Excavation Within Root Protection Areas 16
2.8.6. Installation of Underground Apparatus and Service Runs. 17
2.8.7. Arboricultural Monitoring 17
2.8.8. Additional Precautions Outside the CEZ 17
2.8.9. Site Huts, Storage of Materials and Spoil 18
2.9. Heritage Considerations 18
2.9.1. Site Assessment 18
2.9.2. Heritage Impact Assessment: 18
2.9.3. Mitigation Measures: 19
2.9.4. Compliance with Conservation Principles and Planning Policies: 19
2.9.5. Consultation and Stakeholder Engagement: 19
2.9.6. Monitoring and Management: 19
2.9.7. Conservation Areas: 19
2.9.8. Historic Parks and Gardens: 19
2.9.9. Scheduled Monuments 20
2.9.10. Environmental Areas of Special Character 20
2.9.11. Buildings of Local Interest 20
2.9.12. Archaeology 20
2.9.13. Conclusion: 20
2.10. Methodology for Working under BS EN 13941-1:2019 for Design and BS EN 13941-2:2019 for Installation. 21
2.10.1. Familiarization: 21
2.10.2. Design Process: 21
2.10.3. Installation Process: 22
2.10.4. Compliance Verification: 22
2.10.5. Continuous Improvement: 22

2.11. Site Exit and Demobilization 23

1. INTRODUCTION

This document has been created as part of the planning process for the installation of a district heating network in Worthing. Its purpose is to provide guidance and support in the development of the project, specifically as part of the pre application information pack to give the Planning Authority an overview of the distribution network and how it will be delivered.

Before any construction work can commence, it is essential to first develop a district heating design. This process typically spans several months, and in some cases, even longer. As part of this design phase, a comprehensive survey of buildings is necessary to determine their heating requirements and establish the technical feasibility of connecting them to the district heating system. Initially, the system may connect to 10-20 buildings, but it has the potential to expand over time, potentially serving hundreds or even thousands of buildings. It is crucial to ensure that the heating demands of these buildings are met, while also designing one or more centralised energy centers to provide low carbon energy. The Distribution network is the network of underground pipework used to move heat from the energy centre to the various buildings connected to the heat network.

Similar to the RIBA Stages of Work in architectural projects, the implementation of the district heating network follows a stepwise process that includes planning, feasibility assessment, design, construction, and commissioning. Each stage is necessary to ensure a successful and operational heating system.

2. METHODOLOGY

The following steps identify activities that need to take place on site which will impact on the Local Authority, the general public and road users. This document is intended to give an overview only for the purpose of receiving pre application advise on the proposed heat network from the Planning Authority.

2.1. Provisional Work

2.1.1. Feasibility Stage

The feasibility stage is a crucial phase in the planning process for the district heating network installation in Worthing. It involves a stepwise approach to assess the viability and practicality of the project. The following steps outline the order of work during the feasibility stage:

2.1.2. Review of Statutory Utility Information

To begin the feasibility stage, a comprehensive review of statutory utility information is conducted. This step involves gathering and analyzing data on existing utility infrastructure, including water, gas, electricity, and telecommunications. By examining this information, the project team gains insights into the location and layout of these services, which is essential for

designing the district heating network without interfering with critical infrastructure.

2.1.3. Consultation with Highways Authority for Traffic Management Master Planning

Collaboration with the highways authority is essential during the feasibility stage. The project team consults with the authority to develop a comprehensive traffic management master plan. This plan considers the impact of the district heating network installation on road infrastructure, traffic flow, and pedestrian safety. By engaging in ongoing discussions with the highways authority, the project team gains valuable insights and ensures that all necessary permits and licenses, such as Section 50 licenses, are obtained for excavation and construction works.

2.1.4. GPR Survey in Congested Areas

Ground Penetration Radar (GPR) surveys are conducted as part of the feasibility stage, primarily in congested areas. These surveys play a vital role in identifying suitable routes for the district heating pipes. The significant size of the district heating pipes, up to 1 meter in diameter, requires careful consideration to avoid major infrastructure such as foul and surface water drainage, high-voltage electric cables, and gas lines. GPR surveys provide a non-intrusive and relatively accurate picture of buried services, complementing the information obtained from the review of statutory utility information.

2.1.5. Trial Holes with Slit Trenching

Trial holes with slit trenching are conducted towards the end of the feasibility stage. This step involves digging small trial holes to gather additional information on the ground conditions and verify the feasibility of the proposed routes. By assessing soil composition, identifying potential obstacles, and considering other factors, the project team can make informed decisions regarding the final district heating design. The data obtained from these trial holes helps ensure the successful implementation of the district heating network.

By following this stepwise process during the feasibility stage, the project team lays the foundation for a well-informed and efficient district heating network installation in Worthing.

2.2. Section 50 Application

Under the provisions of the New Roads and Street Works Act 1991 (NRSWA), the installation and maintenance of apparatus in the public highway require compliance with specific regulations and guidelines. Section 50 of the NRSWA stipulates that a license is necessary for laying new or maintaining existing infrastructure in the highway if the asset owner is not a statutory utility organization. In the case of district heating network installation, contractors must apply for and obtain a Section 50 license before commencing any roadwork excavations. The term "highway" encompasses the carriageway, footway, and verge areas. This licensing process is overseen and managed by the Local Authority, ensuring that the installation proceeds with minimal disruption to traffic flows, businesses, and the general public, while still allowing for the necessary infrastructure installation.

The application process for a Section 50 license typically takes around one month following submission, although the duration may vary depending on the specific highway, its location, and the potential level of disturbance expected. Additionally, there is typically a time limit specified for the works, which can be subject to intermittent reviews as the project progresses. Extensions to the permitted duration are common, especially due to external factors or the discovery of previously unidentified infrastructure.

Compliance with the associated Approved Codes of Practice (ACoPs) is also essential during the process of obtaining the Section 50 license. These ACoPs provide further guidance and standards to ensure the safe and efficient execution of roadwork excavations.

In addition to the licensing requirements, changes in traffic speed and direction, as well as parking bay suspensions, may necessitate the implementation of Temporary Traffic Regulation Orders (TTROs). TTROs are official legal orders that allow for temporary modifications to traffic regulations and parking arrangements to accommodate construction activities. These orders are put in place to ensure the safety of workers and road users while minimizing disruption. The project team will collaborate with the relevant authorities to obtain the necessary TTROs and coordinate any required changes to traffic flow and parking arrangements during the installation of the district heating network.

2.3. Traffic Management

Under the provisions of the New Roads and Street Works Act (NRSWA) in Worthing, a robust traffic management plan is essential to ensure the safety of workers and the general public during roadside construction activities. As part of our commitment to compliance and safety, we will engage specialist consultants who possess expertise in traffic management and signage installation for highway projects. These consultants will be instrumental in developing and implementing effective traffic management measures throughout the duration of the project.

The traffic management plan will encompass a range of strategies tailored to the specific requirements of the project and the local area. It will address key aspects such as workplace layout optimization, including the creation of designated walkways and the implementation of physical barriers to separate workers from vehicular traffic. Adherence to speed limits and the enforcement of traffic direction rules will be integral to maintaining safe conditions. Appropriate signage and floor markings will be strategically placed to provide clear guidance to road users and mitigate potential hazards.

To ensure the comprehensive planning of highway activities, we will produce a master plan based on a detailed highway report that has already been undertaken. This report serves as the foundation for our consultation process with West Sussex Highways, with whom we have already initiated discussions. Moving forward, we will continue to collaborate with them to refine our master plan and program, ensuring that it aligns with local regulations, standards, and best practices.

In addition to our focus on general traffic management, we are also actively

consulting with the local hospital to identify and establish efficient blue light routes. By engaging in this consultation process, we aim to ensure that emergency services can operate effectively during the project while minimizing any potential disruptions to their critical operations.

Prior to commencing any work on-site, the traffic management plan for each section of the project that impacts the highway will be presented to the Local Authority for review and acceptance. This comprehensive plan, incorporating the requirements of the NRSWA, demonstrates our commitment to upholding safety standards, minimizing traffic disruptions, and protecting the well-being of workers and the general public throughout the project.

2.4. Site Setup

The establishment of a site compound is an integral part of the construction process, ensuring the smooth and efficient operation of the project. As per the requirements outlined in the Construction (Design and Management) Regulations 2015 (CDM 2015), the principal contractor assumes the responsibility for managing health and safety on the construction site, including the site compound.

The site compound serves as a central hub for the project, providing essential facilities and resources for the workforce. It typically includes secure storage areas for construction materials and equipment, welfare facilities for workers, office space for site management, and any necessary amenities to support the smooth running of the project.

The principal contractor takes a proactive role in establishing and managing the site compound in accordance with the CDM 2015 regulations. This includes ensuring that the compound is appropriately secured, allowing access only to authorized personnel and preventing unauthorized entry. The compound's layout is carefully planned to optimize efficiency, safety, and productivity, taking into consideration factors such as pedestrian and vehicle movement, emergency access, and the overall site logistics.

Within the site compound, the principal contractor is responsible for implementing and maintaining necessary safety measures, such as signage, designated walkways, and barriers, to ensure the well-being of workers and visitors. Adequate welfare facilities, including restrooms, changing areas, and rest areas, are provided to support the health and comfort of the workforce.

The principal contractor, in collaboration with the project team, regularly monitors and reviews the site compound to identify and address any health and safety risks. They are responsible for ensuring compliance with relevant regulations, conducting inspections, and taking prompt action to rectify any issues or hazards that may arise within the compound.

By fulfilling their role in managing the site compound, the principal contractor demonstrates their commitment to upholding health and safety standards and creating a secure and conducive working environment for all personnel involved in the project.

Once a Section 50 license has been granted, the Contractor assumes responsibility for the specific section of the highway identified within the license. This may involve either a complete road closure or the closure of one or more lanes, green spaces, or footpaths. To ensure safety and efficiency, the Contractor will secure the area with appropriate fencing. Within this secured area, the Contractor will establish a site compound, which may include storage areas for materials and equipment, as well as welfare facilities for the workers.

It is crucial to note that the Contractor will be responsible for maintaining the security of the site throughout the project duration. This includes implementing necessary measures to prevent unauthorized access and ensuring the safety of workers, the public, and the project's assets within the designated work area. The Contractor will adhere to all relevant safety regulations and guidelines to create a secure working environment.

By assuming this responsibility, the Contractor demonstrates their commitment to maintaining the integrity of the worksite and protecting the well-being of all stakeholders involved. This includes implementing appropriate security measures, conducting regular inspections, and promptly addressing any security-related issues that may arise. The Contractor's dedication to site security is essential for the smooth progress of the project and the safety of everyone involved.

2.5. Excavation

Not all zones within the project will undergo GPR surveys; however, thorough reviews have been conducted for all areas through combined statutory utility reviews during the Feasibility study, which has been completed. This comprehensive approach ensures that potential underground service conflicts and associated risks are effectively addressed during the planning stages.

To ensure the safety and stability of excavations, appropriate trench support systems will be implemented in accordance with British Standard BS5975:2008 for temporary works. This standard provides guidelines for the design, installation, and maintenance of trench support systems to prevent collapse and protect workers within excavations. By following these guidelines, the project aims to create a safe working environment and mitigate potential hazards associated with excavation activities.

Furthermore, the excavation process will adhere to the guidelines outlined in HSG47, titled "Avoiding danger from underground services." This Health and Safety Executive (HSE) publication provides practical advice and best practices for safely working near underground services, such as gas pipes, electricity cables, and water mains. By following the recommendations in HSG47, the project will minimize the risks associated with potential encounters or damage to underground services during excavation.

The implementation of trench support systems, as guided by BS5975:2008, and adherence to the guidelines in HSG47 demonstrate the project's commitment to prioritizing the safety of workers and mitigating potential risks associated with underground services. These measures, combined with the comprehensive

planning and reviews conducted, contribute to a well-prepared and controlled excavation process for the district heating installation project.

The trenching installation for the district heating project will be carried out in accordance with BS EN 13941-2:2019. This European standard specifically addresses the installation of pre-insulated bonded pipe systems for district heating networks. It provides detailed guidelines and requirements for various aspects of the installation process, ensuring the quality, safety, and performance of the installed system.

By adhering to the provisions of BS EN 13941-2:2019, the project aims to ensure that the trenching installation is carried out in a standardized and compliant manner, meeting the industry's best practices and requirements. This commitment to following established guidelines contributes to the overall quality, reliability, and longevity of the district heating system, providing an efficient and sustainable heating solution for the community.

2.6. Pipe Installation

District heating pipes are typically installed in 12-meter lengths to streamline the installation process and minimize disruptions. During the installation, designated areas will be allocated for localized storage, reducing the need for excessive plant movements and optimizing efficiency.

The joining of the pipes is carried out through arc welding, ensuring a secure and durable connection. Each weld undergoes rigorous testing and certification to ensure its completeness and reliability. To prevent any groundwater penetration, the welded joints are hermetically sealed using specialized sleeves, safeguarding the integrity of the steel pipes. The selection of welders is meticulous, with a focus on their competency, and they are required to hold specific certifications validating their expertise in welding techniques.

The installation depth of the pipes is typically around 1-1.5 meters below the surface. This depth is chosen strategically to avoid interference from other services and minimize potential disturbances caused by access to the utilities above. By positioning the pipes in this manner, their longevity and functionality are preserved.

BS EN 13941-2:2019 is a critical standard that governs the installation of district heating systems. It encompasses various important considerations, such as the design of the trench, including its dimensions and alignment. The standard also provides guidelines on the selection and application of bedding and backfilling materials, ensuring optimal support and stability for the pipes. Furthermore, it offers insights into the appropriate jointing methods, including the use of fittings and accessories that guarantee reliable and long-lasting connections between the district heating pipes.

Adhering to the standard's recommendations, the installation process places significant emphasis on quality control and testing procedures. This includes conducting thorough pressure tests to validate the integrity of the installed system

and ensure its proper functionality. The standard also addresses corrosion protection measures and insulation requirements to safeguard the long-term efficiency and sustainability of the district heating network, promoting energy efficiency and minimizing heat losses.

2.7. Backfill and reinstatement.

Once a section of district heating pipe has been installed and certified, the trench can be backfilled according to specific guidelines and requirements set by local highways specifications, HAUC (UK) guidance, and the NRSWA 1991 ACoPs. These regulations ensure that the backfilling process contributes to the longevity and stability of the installed pipes and highway.

The backfilling procedure involves surrounding the pipes with a carefully selected grade of sand. This particular type of sand allows for natural movement in the pipes caused by thermal expansion, providing flexibility and minimizing the risk of damage. To meet the needs of the open trench volumes at various stages of the works, sand will be delivered to the site, resulting in intermittent vehicle movements dedicated to this purpose.

In addition to the sand layer, high-quality compliant material is used above it, extending beyond the level required for the final reinstatement. This compliant material, in accordance with local specifications and HAUC (UK) guidance, ensures proper support and protection for the pipes, maintaining their integrity and longevity.

The backfilling process follows specific backfill schedules, which outline the required materials, compaction methods, and layering techniques. These schedules are designed to meet the standards set by NRSWA 1991 ACoPs and other relevant regulations. Compliance with these guidelines helps guarantee the structural stability and long-term performance of the district heating network and highway.

By carefully adhering to local highways specifications, HAUC (UK) guidance, and the NRSWA 1991 ACoPs during the backfilling process, the project ensures that the pipes are surrounded by suitable materials and properly supported. This meticulous approach aims to minimize the risk of ground movement, maintain thermal performance, and ensure the overall integrity of the district heating infrastructure and highway.

2.8. Arboricultural Considerations

This methodology has been developed with consideration of the following relevant legislation and planning policies concerning nature conservation.

Legislation:

- The Conservation of Habitats and Species Regulations 2017 (the "Habitats Regulations")1

- The Wildlife and Countryside Act 1981 (as amended) (WCA)
- The Natural Environment and Rural Communities (NERC) Act 2006
- The Wild Mammals (Protection) Act 1996
- European Commission (EC) Directive on the Conservation of Wild Birds (2009/147/EC) (the Birds Directive)
- Council Directive 92/43/EEC on the Conservation of Natural Habitats and of Wild Fauna and Flora (the Habitats Directive)

Guidance and Policy:

- Code of Practice for Biodiversity and Development BS42020:2013 (BSI, 2013)
- CIRIA (2015) Environmental good practice on site (fourth edition) (C741) Charles, P., Edwards, P. (eds). CIRIA, London.
- BS 5837 (2012) Trees in relation to design, demolition, and construction – Recommendations. (BSI, 2012)
- National Joint Utilities Group (2007) Volume 4, Guidelines for the Planning, Installation, and Maintenance of Utility Apparatus in Proximity to Trees

These legislative acts, regulations, and guidance provide the framework for ensuring biodiversity conservation, habitat protection, and the appropriate management of flora and fauna during the project's implementation. By adhering to these regulations and following the recommended guidance, the methodology aims to minimize the project's impact on the natural environment and promote sustainable development practices.

2.8.1. Arboricultural Method Statement (AMS)

This Arboricultural Method Statement (AMS) outlines the necessary measures for the protection of retained trees within the Proposed Development. As part of the preconstruction activities for the network we will carry out a detailed survey of any trees within the final route to assess the impact and mitigation measures required. We will also carry out a detailed review of existing tree survey information the Council holds which we would request is shared with us in response to this pre application.

The AMS primarily addresses the following key aspects relevant to the Proposed Development:

- Root Protection Areas (RPAs)
- Tree protection fencing
- Ground protection
- Excavation within the RPAs
- Installation of underground apparatus
- Arboricultural monitoring
- Additional precautions outside the Construction Exclusion Zone (CEZ)
- Site huts, materials storage, and spoil management

It is important to consider the AMS as a dynamic document that may require periodic review and updates as deemed necessary. The AMS specifically focuses on the prescribed arboricultural protection measures required for safeguarding the retained trees during the construction phase of the Proposed Development.

2.8.2. Root Protection Areas (RPAs)

The Root Protection Areas (RPAs) are defined in accordance with BS 5837 as designated areas surrounding trees that are deemed to contain sufficient roots and rooting volume essential for maintaining the tree's viability. The protection of roots and soil structure within these areas is of utmost importance.

The scope of work being undertaken aligns with the guidelines provided in NJUG 4, which establishes Tree Protection Zones. The Precautionary Zone, which is comparable in size to the RPA, has been designed specifically for utility operators and may offer a simpler calculation method.

Whenever the term RPA is mentioned in this document, it should be understood that it is calculated using either the BS 5837 or NJUG 4 method, both of which yield similar-sized areas. Since the tree locations have not yet been determined for this method statement, the RPA shall be calculated using one of the following formulas prior to commencing any work near trees:

- BS 5837 method: Stem diameter measured at 1.5m above ground level multiplied by 12.
- NJUG 4 method: Stem girth/circumference at 1.5m above ground level multiplied by 4.

To ensure the protection of trees within the RPAs, all work conducted within these areas must include the following measures:

- Implementation of ground protection measures.
- Installation of fencing around the designated area with eye-level signs for visibility.
- Supervised hand or machine excavation within the RPA.

2.8.3. Protective Barriers

Protective barriers in the form of tree protection fencing will be installed to restrict access to the Root Protection Areas (RPAs) surrounding the retained trees. The following specifications will be strictly followed:

The area located behind the tree protection fencing will be designated as a Construction Exclusion Zone (CEZ), where no construction activities, storage of materials, or pedestrian/vehicular access will be allowed.
Weatherproof notices will be attached at suitable intervals on the tree protection fencing at eye level. These notices will contain informative text stating:

"TREE PROTECTION FENCING CONSTRUCTION EXCLUSION ZONE – NO ACCESS."

Regular daily checks will be conducted by an appointed individual to ensure that

the tree protection fencing remains intact and functional. Any damages identified will be promptly repaired.

Tree protection fencing will be installed prior to the commencement of any on-site works, including site clearance, groundwork, or the importation of plant and materials. Once erected, the tree protection fencing will remain in place until all construction activities are completed. The tree protection fencing selected should be appropriate for the purpose of excluding construction activities and suitable for the proximity and intensity of the work being carried out. An example of the type of tree protection fencing that may be used is illustrated in Figure 1.

Figure 3-1 - Example of suitable tree protection fencing:

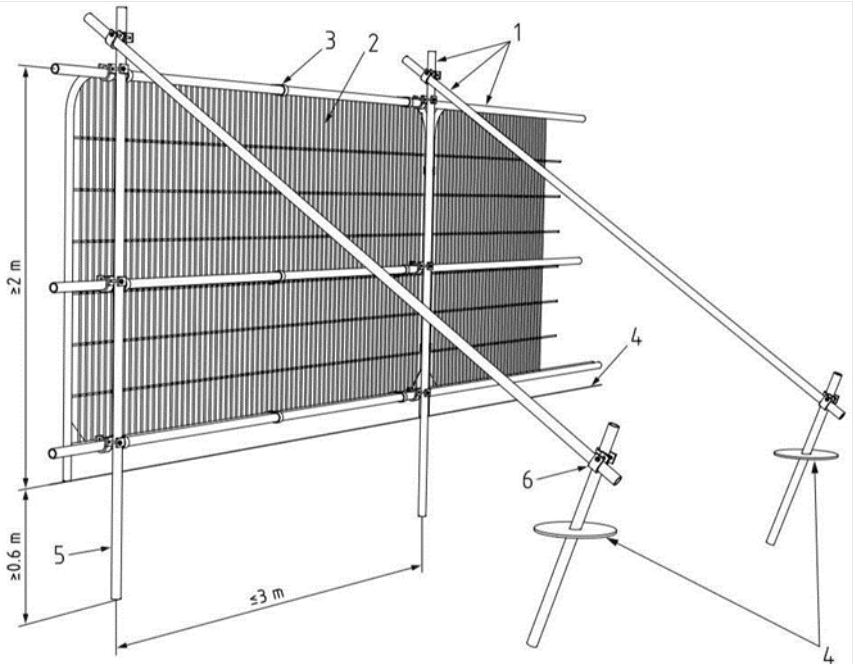

Key:

1. Standard scaffold poles
2. Heavy gauge 2m tall, galvanized tube and welded mesh infill panels
3. Panels secured to uprights and cross-members with wire ties.
4. Ground level
5. Uprights driven into the ground until secure (minimum depth 0.6m)
6. Standard scaffold clamps
7. Signage at eye height to indicate the RPA.

2.8.4. Ground Protection

Ground protection measures will be implemented within any area where construction access is required within the RPAs of retained trees. The specification for ground protection will be reviewed by the arboriculturist before implementation on-site. In summary, the ground protection measures will include:

- Installation of fencing with eye-level signs.
- Supervised hand or machine excavation.
- Appropriate pruning to minimize canopy damage prior to construction.
- Securing branches where possible.
- Protection of individual stems and branches.

Ground protection measures will be in place before any on-site works, including site clearance, groundwork, or the importation of plant and materials. Ground protection measures will remain in place until all construction activities are completed.

An appointed person will conduct regular daily checks to ensure that the ground protection measures remain in place and are functioning effectively. Any damages identified will be promptly rectified. The ground protection measures employed should be robust enough to prevent damage or disturbance to the underlying soil. In compliance with British Standard BS 5837, the ground protection specification is as follows:

Areas of unmade ground:

- For pedestrian access only, ground protection measures will consist of a single layer of scaffold boards placed on top of a 100mm layer of compression-resistant material (e.g., woodchip) that is laid on a geotextile membrane.
- For pedestrian activities and plant weighing up to 2 tons, proprietary interlinked ground protection boards will be used. These boards will be placed on top of a 150mm layer of compression-resistant material (e.g., woodchip) laid on a geotextile membrane.
- For wheeled or tracked equipment weighing over 2 tons, a structural engineer will design an alternative ground protection system. This may involve temporary cellular confinement systems, reinforced concrete slabs, or track board systems. The details of the alternative system must be approved before construction commences.

Areas of existing hard surfacing:

- Existing hard surfacing areas identified for use as ground protection will not be removed during site clearance and will be retained throughout the construction period.
- An engineer will assess the existing hard surfacing areas to ensure they are adequate for preventing damage or disturbance to the underlying soil.
- A precautionary approach will be taken for any anticipated loadings on the existing hard surfacing.

If the engineer determines that the existing surfacing is inadequate, a specification for additional ground protection must be provided, and the necessary actions will

be taken on-site.

2.8.5. Excavation Within Root Protection Areas

Excavation work within RPAs may be necessary and will follow the methodology outlined below. In case of uncertainty, refer to NJUG 4 Precautionary Zone or seek advice from a qualified arboriculturist.

Pre-commencement:

- All personnel involved will be informed of this working methodology.
- Before commencing any work, the location of RPAs and excavations must be determined and marked using non-toxic marker paint.

Mechanical excavation:

- Soil will be carefully removed using a non-toothed excavator bucket. The bucket's leading edge will be angled parallel to the soil surface, and thin layers of approximately 25mm depth will be excavated. An observer/banksman will be present at all times to watch for roots. If roots are encountered, excavation will stop, and the soil surrounding the root will be manually excavated.
- Spoil will be deposited outside the RPA.
- Plant or machinery should never operate within the RPA unless placed on suitable ground protection (refer to Ground Protection section).
- The soil surface will be inspected after each use of the bucket. If tree roots are found, the area will be carefully hand-excavated to expose any underlying roots without causing damage.

Hand excavation:

- Soil will be carefully removed using hand tools only. Spoil will be deposited outside the RPA. A trowel will be used to loosen and remove soil near roots, while a brush or compressed air will be used to remove soil adhering to the outside of roots.
- The closest excavations to the tree(s) will be prioritized and carried out under the direct supervision of the project arboriculturist. Hand excavations will extend at least 0.6m in depth. If deemed acceptable by the project arboriculturist, mechanical means may be employed beyond this depth.

Treatment of uncovered tree roots:

- Roots less than 25mm in diameter will be cleanly cut back to the edge of the excavation using a sharp saw or secateurs.
- Roots greater than 25mm in diameter will only be severed with technical approval from an arboriculturist. If approved, the roots will be cleanly cut back to the edge of the excavation using a sharp saw.
- Once the desired excavation depth is reached, the final soil surface will be inspected for any roots that could be damaged during construction. The advice of the ACoW will be sought regarding the most suitable means of protecting any identified roots.

Post-excavation:

- Exposed roots and soil closest to the tree will be covered as soon as possible to protect them from extreme temperatures and desiccation.
- If uncured concrete is to be used, an impermeable membrane will be installed to prevent leachate from contacting roots or entering the surrounding soil.
- If excavations pose a risk of soil collapse, bracing or other support measures will be employed to prevent loosening or further loss.

2.8.6. Installation of Underground Apparatus and Service Runs.

Whenever possible, underground services such as cables and pipes should be located outside the RPAs of any preserved trees. Soakaways must not be situated within RPAs.

Services will be grouped together and utilize common ducts, with all inspection chambers positioned outside the RPAs whenever feasible. Tree protection measures must be agreed upon and implemented before any work is carried out. If services must pass through the RPA of a preserved tree, trenchless techniques will be used whenever possible. Launch and receptor pits will be located outside the RPA, and environmentally harmful lubricants will not be used.

If trenchless techniques are impractical, open trenches will only be considered if they can be excavated without requiring shoring of the sides, in consultation with the project ACoW.

2.8.7. Arboricultural Monitoring

Effective tree protection requires adherence to a logical sequence of work combined with arboricultural monitoring. Arboricultural monitoring ensures that all tree protection measures are appropriate, implemented according to approved details, and promptly identifies and addresses any unforeseen arboricultural issues.

The Principal Contractor is responsible for ensuring that all site personnel are aware of the requirements outlined in this AMS (Arboricultural Method Statement) and any future amendments. Copies of the approved AMS will be available on-site, and its requirements will be incorporated into all relevant site management documents and induction procedures.

2.8.8. Additional Precautions Outside the CEZ

Careful planning of site operations will be conducted to ensure that wide or tall loads, or plant equipment with booms, jibs, and counterweights, can operate without coming into contact with preserved trees. Contact with trees can cause severe damage and jeopardize their safe preservation. Therefore, the transit or movement of plant equipment in close proximity to trees will be supervised by a banksman to maintain adequate clearance at all times.

In certain circumstances, maintaining adequate clearance may be impossible, requiring access facilitation pruning in consultation with the project ACoW. Notice boards, telephone cables, or any other services must not be attached to any part of a preserved tree.

2.8.9. Site Huts, Storage of Materials and Spoil

Temporary site compounds, including mobile WCs and their service connections, should be positioned away from the RPAs of preserved trees.

Delivery, storage, mixing, and discharge of concrete and other cement-based materials must be conducted to prevent run-off and spillage near the RPAs of preserved trees.

No substances potentially harmful to plant tissue, such as diesel, bitumen, concrete, mortar, or other phyto-toxic materials, shall be stored, discharged, prepared, or used in a way that could harm existing root growth or other parts of preserved trees through direct contact, infiltration, or run-off.

Emergency spillage kits will be readily available to minimize the impact of any accidental spills on the local environment. All activities involving toxic chemicals, such as cement mixing or vehicle washing, must have provisions in place to contain any accidental spillage.

Building materials shall not be stored within the RPAs of preserved trees. Spoil generated from site activities, including demolition and materials designated for re-use, should either be removed from the site or, if kept on-site, stored or piled well away from the RPAs of preserved trees.

2.9. Heritage Considerations

This method statement outlines our approach to preserving and respecting the conservation and heritage aspects of the heat network installation project in Worthing. Our primary objective is to ensure that the installation aligns with planning requirements and maintains the integrity of the town's cultural heritage.

2.9.1. Site Assessment

Before commencing any works, a comprehensive site assessment will be conducted to identify and document the conservation areas, listed buildings, and other heritage assets in proximity to the project site. This assessment will inform our planning and decision-making processes.

2.9.2. Heritage Impact Assessment:

A detailed heritage impact assessment will be conducted to evaluate the potential effects of the heat network installation on the identified heritage assets. This assessment will consider factors such as visual impact, setting, historic fabric, and any potential disturbance or damage that could occur.

2.9.3. Mitigation Measures:

Based on the findings of the heritage impact assessment, appropriate mitigation measures will be proposed to minimize or mitigate any adverse impacts on the heritage assets. These measures may include design modifications, materials selection, landscaping considerations, or other protective measures. Our goal is to ensure that the installation does not compromise the significance or integrity of the heritage assets.

2.9.4. Compliance with Conservation Principles and Planning Policies:

We will adhere to relevant conservation principles, national and local planning policies, and guidelines for preserving and enhancing heritage assets throughout the installation process. By integrating these principles into our planning and execution, we aim to demonstrate our commitment to upholding Worthing's cultural legacy.

2.9.5. Consultation and Stakeholder Engagement:

We will engage in proactive consultations and discussions with heritage authorities, conservation groups, and relevant stakeholders throughout the project planning process and project life cycle. This collaborative approach allows us to incorporate their valuable insights, address concerns, and ensure that the heat network installation respects the community's heritage.

2.9.6. Monitoring and Management:

To ensure the ongoing protection of heritage assets during the construction and operation of the heat network, a comprehensive monitoring and management plan will be implemented. This plan will include maintenance procedures, regular monitoring activities, and reporting mechanisms to promptly address any issues that may arise.

2.9.7. Conservation Areas:

Conduct a detailed survey of the conservation areas in close proximity to the project site.

Ensure that the heat network installation design is in harmony with the architectural character and features of the conservation areas. Implement measures to minimize visual impact, such as using materials and finishes that blend with the existing surroundings. Consult with local conservation officers and relevant authorities to obtain necessary approvals and ensure compliance with conservation area regulations.

2.9.8. Historic Parks and Gardens:

Identify any historic parks and gardens within the vicinity of the project site.
Avoid any construction activities that may cause damage to the existing landscape features, including trees, vegetation, and historical structures. Coordinate with landscape architects or heritage specialists to develop a landscaping plan that

complements and enhances the historic parks and gardens. Implement measures to protect and preserve the integrity of the historic landscape during and after the installation process.

2.9.9. Scheduled Monuments

Identify any scheduled monuments near the project site. Conduct a thorough assessment of the potential impact of the heat network installation on these monuments. Consult with heritage authorities and obtain necessary approvals and permits for working in the vicinity of scheduled monuments. Implement protective measures, such as fencing or barriers, to prevent accidental damage to the monuments during construction activities.

2.9.10. Environmental Areas of Special Character

Identify and assess the environmental areas of special character in the vicinity of the project site.

Consider the unique environmental features and characteristics of these areas during the planning and design of the heat network installation. Implement measures to minimize disruption to the habitats, flora, and fauna within the environmental areas. Coordinate with environmental experts or ecologists to develop appropriate mitigation strategies to protect and enhance these special areas.

2.9.11. Buildings of Local Interest

Identify and document the buildings of local interest in the vicinity of the project site. Conduct a detailed assessment to understand the historical and architectural significance of these buildings. Develop a strategy to avoid any damage or disturbance to the buildings during construction activities. Implement measures to ensure that the heat network installation does not compromise the integrity or visual appearance of the buildings.

2.9.12. Archaeology

Conduct an archaeological assessment to identify any potential archaeological sites or artifacts within the project area. Consult with archaeologists or heritage specialists to develop an appropriate strategy for excavations or ground works in areas of archaeological importance. Follow best practices for recording and preserving any archaeological finds that may be encountered during construction. Coordinate with relevant authorities to ensure compliance with archaeological regulations and obtain necessary permits for working in archaeological sensitive areas. Please note that these are general works and may need to be further customized based on the specific requirements and characteristics of the project site.

2.9.13. Conclusion:

In conclusion, our method statement demonstrates our commitment to preserving and respecting the conservation and heritage aspects of the heat network installation project in Worthing. Through thorough site assessments,

heritage impact assessments, and the implementation of appropriate mitigation measures, we aim to ensure that the installation aligns with planning requirements and maintains the integrity of the town's cultural heritage.

By complying with conservation principles, national and local planning policies, and engaging in consultations with heritage authorities and stakeholders, we seek to incorporate valuable insights and address concerns to ensure the project's harmony with Worthing's cultural legacy.

Our comprehensive monitoring and management plan will further safeguard heritage assets during construction and operation, allowing for ongoing protection and prompt addressing of any issues that may arise.

With a focus on specific works related to conservation areas, historic parks and gardens, scheduled monuments, environmental areas of special character, buildings of local interest, and archaeology, we will tailor our approach to each unique aspect, ensuring their preservation and minimizing any potential adverse impacts.

Through this method statement, we reaffirm our commitment to responsible and respectful development, valuing the heritage and cultural richness of Worthing throughout the heat network installation project.

2.10. Methodology for Working under BS EN 13941-1:2019 for Design and BS EN 13941-2:2019 for Installation.

Methodology for Working under BS EN 13941-1:2019 for Design and BS EN 13941-2:2019 for Installation.

2.10.1. Familiarization:

All team members involved in the design and installation process will familiarize themselves with the requirements outlined in BS EN 13941-1:2019 for Design and BS EN 13941-2:2019 for Installation. This includes understanding the key principles, terminology, and specific guidelines provided in the standards.

2.10.2. Design Process:

- Requirement Analysis: Conduct a thorough analysis of the project requirements, considering factors such as heat demand, network capacity, and system efficiency. Ensure compliance with the design parameters outlined in BS EN 13941-1:2019.
- System Sizing and Configuration: Determine the appropriate sizing and configuration of the heat network components, including heat generators, distribution pipework, and consumer connections, while adhering to the design criteria specified in BS EN 13941-1:2019.
- Hydraulic Design: Apply hydraulic design principles to ensure optimal flow rates, pressure levels, and temperature differentials within the heat network. Verify compliance with the hydraulic design requirements stated in BS EN 13941-1:2019.
- Safety Considerations: Incorporate safety measures and fail-safe mechanisms

into the design to prevent potential hazards or accidents. Follow the safety guidelines and recommendations outlined in BS EN 13941-1:2019.

2.10.3. Installation Process:

- Preparation and Planning: Develop a detailed installation plan, considering factors such as site conditions, logistical requirements, and the sequence of installation activities. Ensure compliance with the installation requirements specified in BS EN 13941-2:2019.
- Material Selection: Select appropriate materials that meet the specifications and performance requirements outlined in BS EN 13941-2:2019. This includes choosing suitable pipes, fittings, valves, and other components based on their compatibility with the heat transfer medium, durability, and corrosion resistance.
- Installation Techniques: Implement proper installation techniques, such as pipe jointing methods, pipe support systems, and thermal insulation, in accordance with the guidelines provided in BS EN 13941-2:2019. Adhere to the specified installation tolerances and procedures to ensure the integrity and efficiency of the heat network.
- Quality Assurance: Establish quality control measures throughout the installation process to verify compliance with the requirements of BS EN 13941-2:2019. Conduct regular inspections, testing, and documentation to ensure the quality and reliability of the installed heat network components.
- Health and Safety: Prioritize health and safety considerations during the installation activities, adhering to relevant regulations and guidelines. Provide appropriate training and personal protective equipment (PPE) to all personnel involved in the installation process.

2.10.4. Compliance Verification:

- Testing and Commissioning: Conduct thorough testing and commissioning procedures to verify the performance, functionality, and safety of the installed heat network. Follow the testing protocols and procedures outlined in BS EN 13941-2:2019.
- Documentation and Records: Maintain comprehensive documentation and records of the design and installation processes, including design calculations, material specifications, installation procedures, test reports, and compliance certificates. This documentation should align with the requirements set forth in BS EN 13941-1:2019 and BS EN 13941-2:2019.

2.10.5. Continuous Improvement:

- Regularly review and update the design and installation practices based on emerging best practices, technological advancements, and any revisions to BS EN 13941-1:2019 and BS EN 13941-2:2019. Engage in professional development activities to stay informed about industry trends and ensure continuous improvement in design and installation methodologies.
- By following this methodology, we aim to ensure that our work complies with the requirements of BS EN 13941-1:2019 for Design and BS EN 13941-2:2019 for Installation, providing a reliable and efficient heat network system that meets the highest standards of quality and safety.

2.11. Site Exit and Demobilization

Upon completion of all works, our Contractor will execute a systematic and organized site exit, ensuring a seamless transition and leaving the project site in a satisfactory condition. This process involves the following steps:

Work Assessment: Conduct a comprehensive assessment of all completed works to ensure they meet the required standards and specifications. Address any outstanding issues or deficiencies promptly to achieve full compliance.

Site Restoration: Prioritize the restoration of the project site to its original condition or as specified in the project requirements. This includes removing any temporary structures, equipment, or waste materials in a safe and responsible manner.

Area Cleanup: Implement a thorough cleanup process to remove debris, construction waste, and any other materials resulting from the installation activities. Dispose of waste materials in accordance with applicable regulations and environmental guidelines.

Dismantling of Site Security Fencing and Site Welfare Facilities: Carefully dismantle the site security fencing, taking necessary precautions to prevent any damage to the surroundings. Restore the affected areas, including repairing any landscaping or reinstating features to their original state.

Final Inspection: Conduct a final inspection of the project site to verify that all required restoration and cleanup activities have been completed to a satisfactory standard. Address any outstanding items identified during the inspection.

Handover Documentation: Prepare all necessary handover documentation, including record drawings, as-built documentation, operation and maintenance manuals, and any other relevant documentation specified in the project contract. Ensure that these documents are compiled accurately and reflect the final installed state of the heat network system.

Client Handover and Acceptance: Coordinate with the client or project stakeholders to arrange a formal handover and acceptance process. Present the completed works, documentation, and any required certifications or test reports to demonstrate compliance with the project requirements and relevant standards.

Project Closure: Formalize the project closure by completing all administrative and contractual obligations, including finalizing financial matters, filing necessary reports, and archiving project documentation for future reference.

By following this methodology for site exit and demobilization, we aim to ensure a smooth and orderly conclusion to our presence on the project site, leaving behind a well-restored and clean area in compliance with all regulatory and contractual requirements.