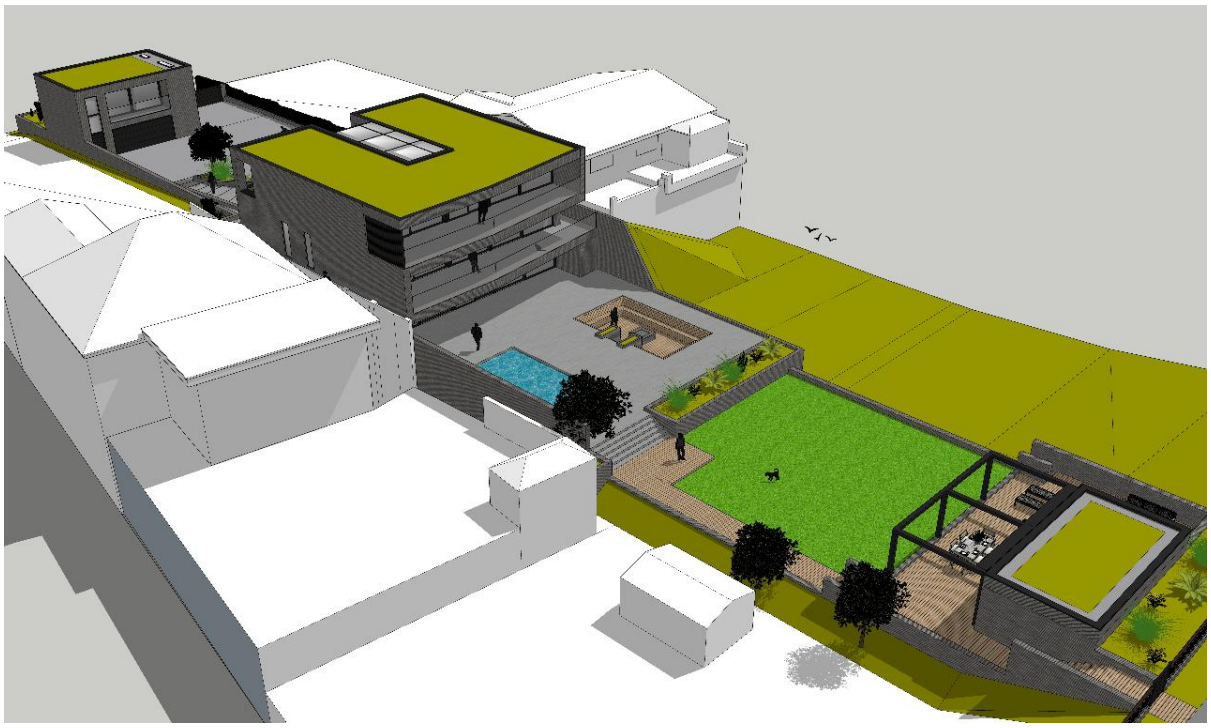

1.0 Introduction

The site is situated at 42 Brighton Road, Lancing, and is accessed via the existing driveway on Brighton Road. The site is surrounded by residential properties and currently contains a derelict bungalow an elevated position overlooking the beach front.

The Works will involve demolition of the existing house and the construction of a single dwelling plus separate garage block and garden room.

The following strategy has been devised to ensure the safe execution of all stages of works. We aim to minimise the disruption to the surrounding area and local residents at all times and will work with the council to adapt our procedures if/should any problems arise.

Any subsequent revisions to this plan will be issued to Adur and Worthing Council for their information and consideration

2.0 Construction Start / Completion Dates

Main Contract Works

- Start date – April 2022
- Completion date – April 2023
- Overall duration 52 weeks

3.0 Proposed Working hours

The site will operate between the hours of 08.00 – 18.00 weekdays, with 9.00-13.00 Saturdays (where necessary).

These hours are to be adhered to at all times. Materials movement (deliveries and disposals) will where possible be carried out in off peak hours to mitigate disruption to local residents/traffic.

4.0 Community Liaison - Neighbours

As a responsible neighbour, we are very mindful of the impact of construction operations upon our neighbours and take this responsibility very seriously. Prior to any works commencing a member of our construction team make personal introductions with the neighbours to advise of likely impact of the works and to provide a point of contact should any issues arise. This is followed up by a letter drop listing key contacts.

5.0 Access for Vehicles

Access and egress for the site is via the existing driveway from Brighton Road only. It is proposed to utilise the existing site crossover for deliveries/disposals.

Brighton Road, is the main coastal road running east to west between Hove and Worthing.

The sequencing of works has been planned to enable vehicle to unload on site for the duration of the construction works. This will be managed closely the site management team.



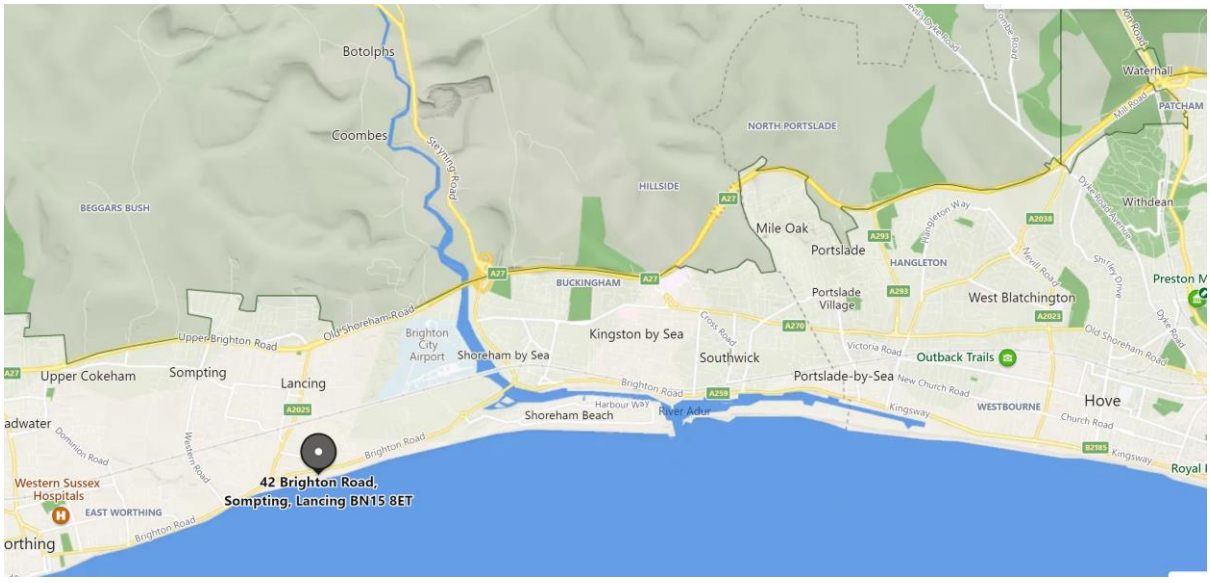

6.0 Size of Vehicles

Various sized vehicles will visit site for deliveries and collections:

Small light-waste vehicles e.g. 3.5 ton tippers

Heavy skip wagons e.g. 20 ton Ro-Ro for rubbish and removal of arising

Heavy rigid flat-bed 10 to 20 ton i.e. plant / material deliveries, scaffold and salvage collection

The typical size of vehicle as shown below and will have a maximum of 32 tonne gross weight when loaded.

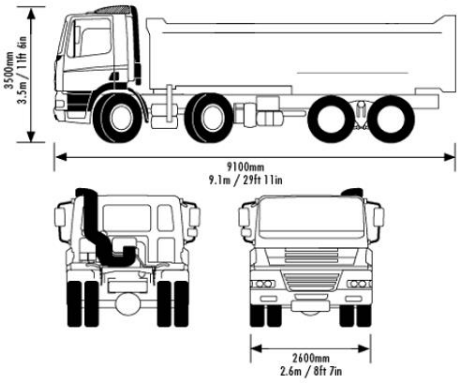

The type and frequency of the vehicles arriving at site will vary as work progresses.

The dwell time will be a maximum of 20 minutes. All vehicles will be banked into the site and loaded / unloaded with-in the deliveries / unloading zone.

Any vehicle arriving at site before or after the agreed time of delivery will be turned away.

Most of deliveries will be scheduled for weekdays to avoid Saturdays.

7.0 Parking and Loading Arrangements

Parking on site will be only available periodically dependent upon the construction phase. However workmen will be encouraged to use public transport and share vehicles. Whilst Brighton Road is not in a controlled parking zone, to limit disruption to residents, site personnel will be discouraged from parking in the immediate area.

Deliveries / disposals will be managed using a booking in procedure to control the number of vehicles within the Brighton Road area. Materials will be procured where possible on an ‘on time’ basis to incorporate these into the works as soon as possible.

The public footpath is on the opposite side of Brighton road to the site entrance so pedestrian access is limited. Deliveries will be banked by a qualified banksman and all materials will be stored within the boundary of the site.

The frequency of deliveries will of course be variable but will typically consist of 2 to 3 deliveries per day during peak construction. Where possible these deliveries will be arranged to avoid peak traffic hours for both motorists, cyclists and pedestrians

Site Location Plan and Google Street View





8.0 Protection of the Public

The site is to be secured to the entire perimeter/boundary with a combination of solid hoarding or metal heras fencing .

It is proposed to erect solid hoarding to the front of the site (Brighton Road), with secured access gates. Access to site will be monitored by site operatives.

The appointed site manager will ensure that the site perimeter is regularly inspected to ensure the pavement is kept free of debris.

All deliveries with be controlled by the site management team at ALL times.

9.0 Control of dirt and dust from the Public Highway

In accordance with the Institute of Air Quality Management guidance, appropriate assessments will be made specific to each construction activity. This will form the basis for task specific risk assessments and methods statements detailing appropriate measures to be taken. For instance,

- During the demolition and groundworks phase, the building will be hosed down to mitigate the spread of dust within the local area.
- A wheel washing facility will be in place on site at the entrance (where necessary).
- The adjacent roads and footways will be swept clean and hosed at the end of each day.
- On-going monitoring of dust levels on and around the site will be carried out by the site management team included record keeping where appropriate.
- We are required to comply with all Regulations introduce under the Clean Air Act 1993.
- Burning materials on site is prohibited at ALL times.

  (Full details of dust and dirt mitigation measures will be included in job/package specific risk assessments and method statements. Sub-contractors are required to submit these to the construction management team a minimum of 1 week prior to works commencing for consideration and to allow suitable provision to be made.

10.0 Sequence of Works

As the site has a single point of access and egress, the Construction Works will be undertaken in 2 continuous phases. Working from the rear/upper end of the site the houses will be constructed first, working down the site in sequence.

Before Works can commence a checklist will be completed by the construction delivery team which will form part of the Construction Phase Plan and cover such items as service isolations, site clearance, arrangements of any necessary licences and notices and WAC tests to establish details of any necessary remediation works. The Works will comprise of;

- Services isolation
- Demolition of all existing house
- Temporary service installations
- Site clearance/contiguous piling, reduce level excavations/retaining walls
- Piled foundations, reinforced ground beams and pile caps, insitu concrete slabs
- Underground drainage installations
- RC Lower ground floor construction
- Scaffolding
- Concrete frame and masonry superstructures
- Building envelope works consisting of brickwork, windows & doors, balustrading and roofing installations
- Mechanical & Electrical Services Installations
- Finishes and fit out
- New Utilities supplies
- External Works / landscaping

11.0 Construction Methodology

Following demolition of the existing buildings on site, an enabling works phase will be carried out to reduce site levels.

The site currently slopes to the south and therefore facilitate the new lower ground floor construction, the site levels are to be reduced.

To mitigate disruption to neighbouring buildings it is proposed to install a contiguous piled wall to the Eastern and Western boundary. Continuous Flight Auger (CFA) piles will be used as this method provides very little vibration and without excessive noise.

Upon completion of the Contiguous piling the eastern site levels will be excavated to make way for the lower ground floors to the house. Reinforced capping beams and concrete retaining walls will be constructed.

A reinforced concrete frame structure will be constructed to form the above ground superstructures to the house.

12.0 Noise & Vibration

All excessively noisy operations will be limited to the times of 8.00-18.00 Monday to Friday

As far as practical all reasonable measures will be undertaken to mitigate noise levels (plant and tools fitted with silencers)

All plant and equipment is regularly checked to ensure it's in good working order in accordance with manufacturer's standards. Equipment is to be properly silenced and meet statutory emissions standards.

All operative will be appropriately trained and equipped with ear defenders or ear plugs as required.

Contractors are encouraged to purchase tools equipped with vibration absorbing features.

Machines in intermittent use should be switched off to mitigate against unnecessary noise. Where nosy equipment is required to run continuously acoustic enclosures shall be considered.

Our Health and Safety Manager will undertake regular site inspections together with toolbox talks to ensure operatives are appropriately informed and equipped to manage such risks.

13.0 Risk Assessments and Method Statements (RAM's)

All Works Packages will be subject to site specific Risk Assessment and Method Statements. These will be reviewed by the site management team, signed off and the workforce inducted prior to each element commencing on site

Toolbox talks will be undertaken on a weekly basis as a minimum and also whenever a new tradesmen are introduced to the site. This will include a every time a

14.0 Site Welfare Facilities

Welfare will be provided and include facilities for heating food and making hot drinks. Toilet will have hot and cold washing facilities with a soap and skincare system provided and a facility for changing and drying clothing will be provided.

During the initial stages of construction, site welfare will be located within temporary/mobile site huts. Once the garage block has been constructed, the garage units will be utilised to enable landscaping works to progress.

15.0 Vertical Access

To provide access to vertical faces of the building for RC frame, masonry envelope and window installations, a full scaffold system will be erected to the perimeter.

All fixed scaffold is to be erected, adapted and dismantled by suitably qualified scaffold operatives with supervision ensuring;

- Al scaffolding to be installed in accordance with NASC standards
- All scaffolding works to be accompanied by a handover certificate to be kept on file on site at all times
- Trained operatives will carry out weekly inspections of all scaffolding from the date of handover certificate. This will be documented, and records kept on site.
- Only trained operatives are to carry out any site modifications and on completion, these should be documented, and a record kept on site.
- Any exposed scaffold poles as ground level are to be foam wrapped and

. (Refer to site set up plan for layouts)

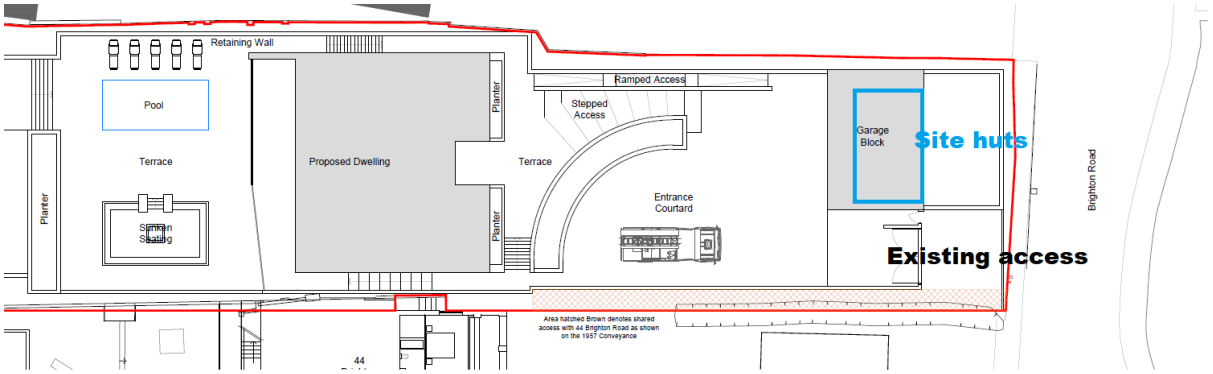

Plan of Construction Site Layout