T.P. OFFICE COPY
BOROUGH OF WORTHING
RECEIVED
TP REF NO
WB / /

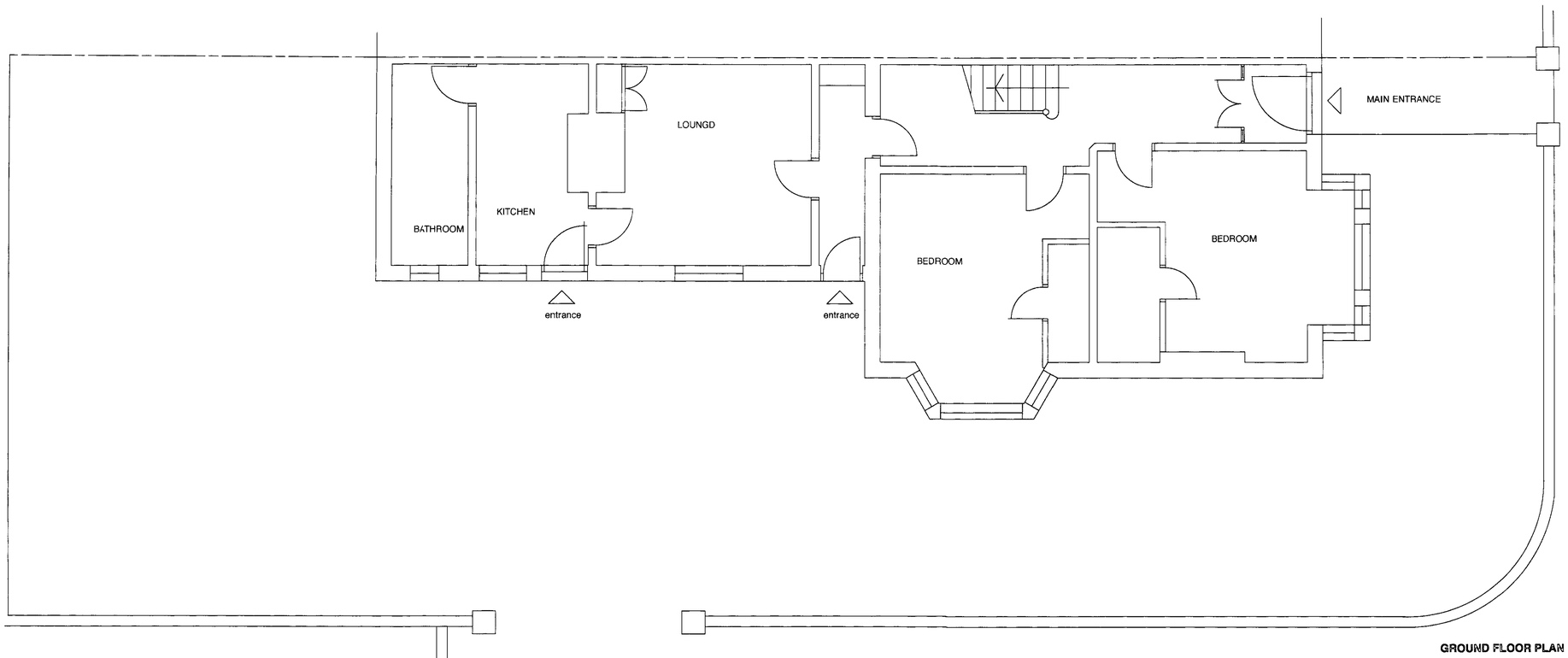

GROUND FLOOR PLAN

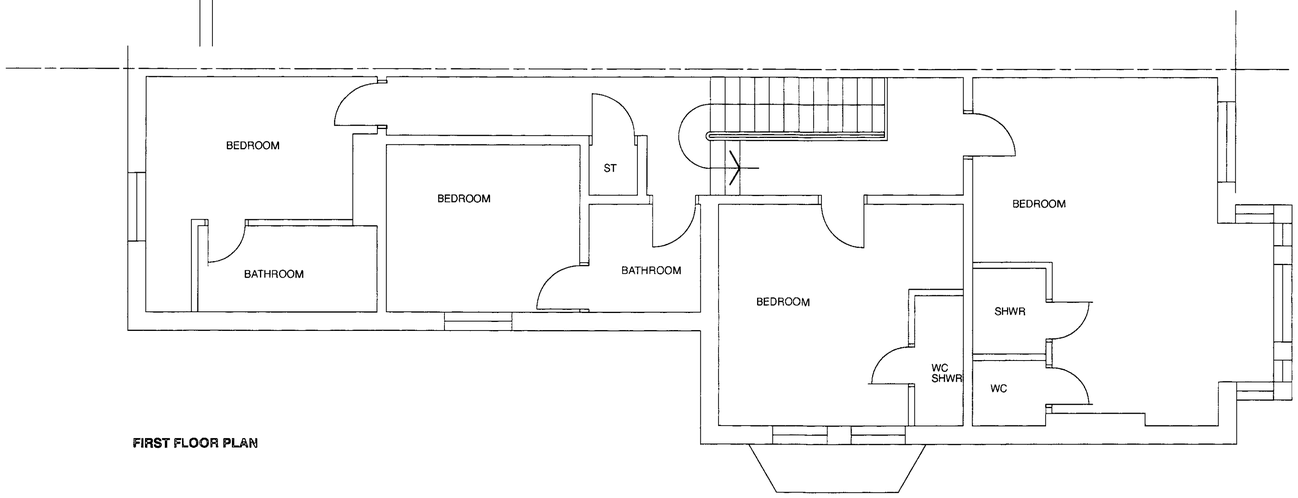

FIRST FLOOR PLAN

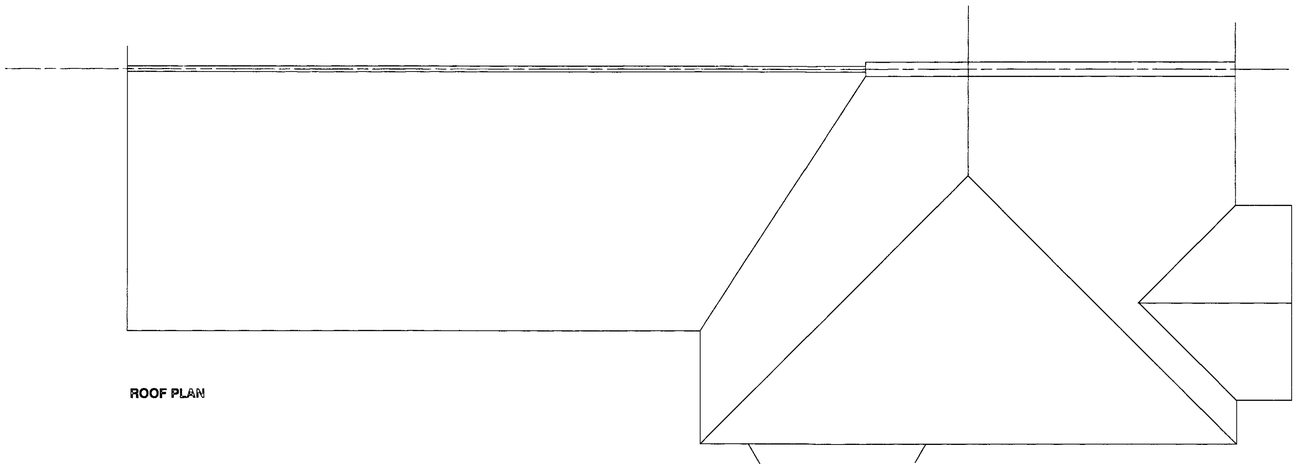

ROOF PLAN

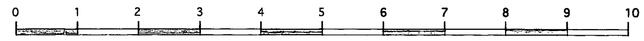

SCALE BAR A1 DRAWING

Do not scale from these drawings. The contractor is to check all dimensions, levels and conditions on site and advise of any discrepancies prior to the commencement of any work on site. All work is to be carried out in strict accordance with the relevant, current British Standards and codes of practice. Materials and components are to be fixed in strict accordance with the manufacturers instructions and recommendations and relevant body

AMENDMENTS

26 WARWICK GARDENS WORTHING

Client: Mr. J COSGROVE

Description: EXISTING PLANS

robert saunders partnership
Chartered Architects, Planning & Development Consultants, Project Management.

Date	Scale	Job No.	Drawing No.	Revision
April 2016				