DIMENSIONS

VERTICAL CROSS SECTIONS

64mm Bottom Rail & 155mm Cill

105411 Outer Frame
105032 Upper Sash
105033 Lower Sash
105038 Interlock
105037 Cill Section
105415 Sash Stop
105414 Infill No Brush
105412 Bead Bar

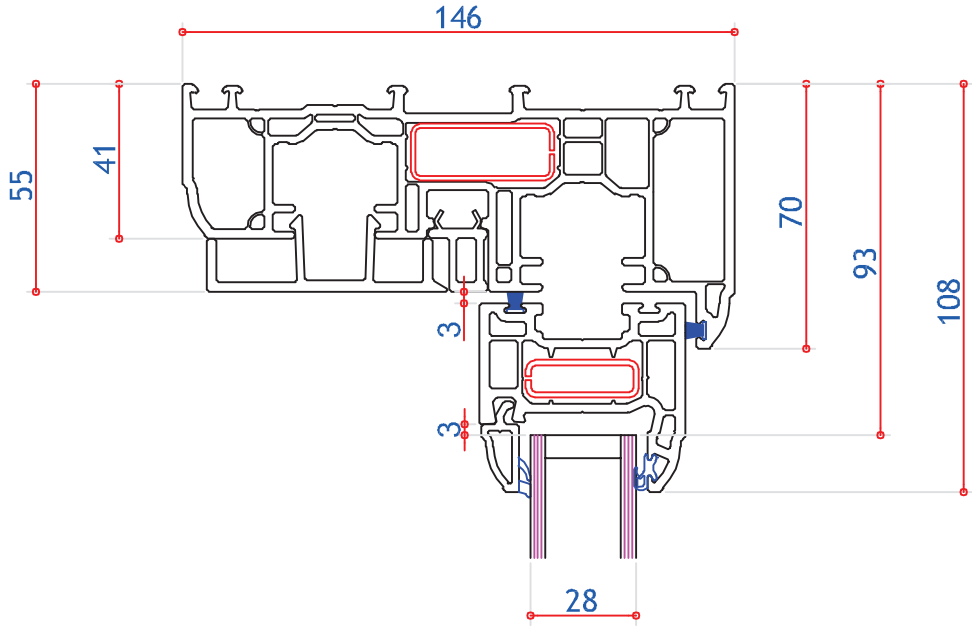

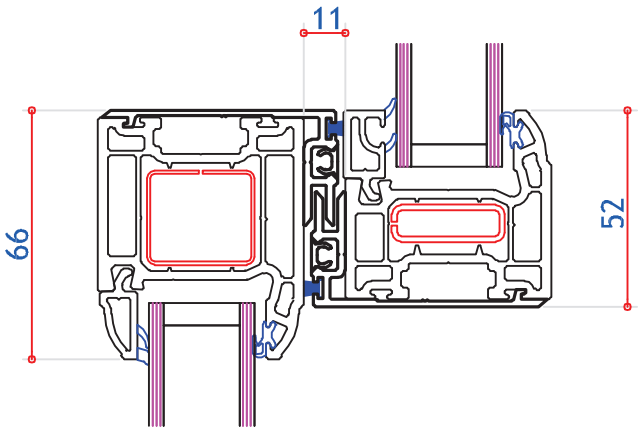

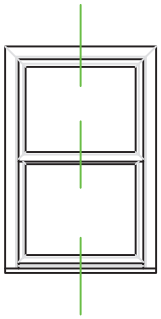

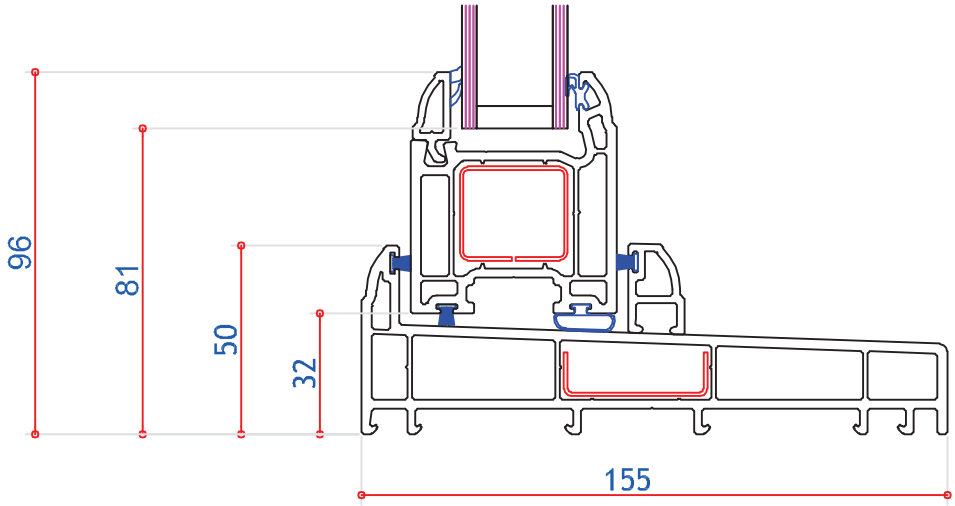

2

DIMENSIONS

VERTICAL CROSS SECTIONS

64mm Bottom Rail & 200mm Cill

105411 Outer Frame
105032 Upper Sash
105033 Lower Sash
105038 Interlock
105410 Cill Section
105415 Sash Stop
105414 Infill No Brush
105412 Bead Bar

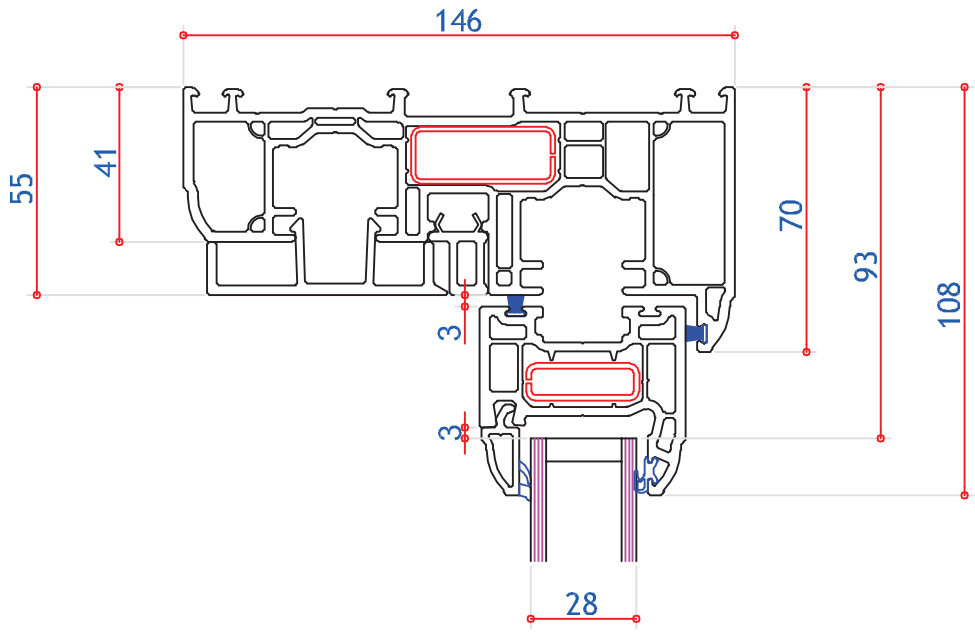

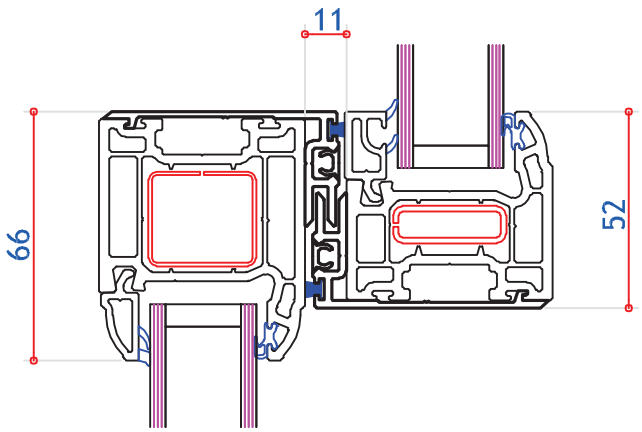

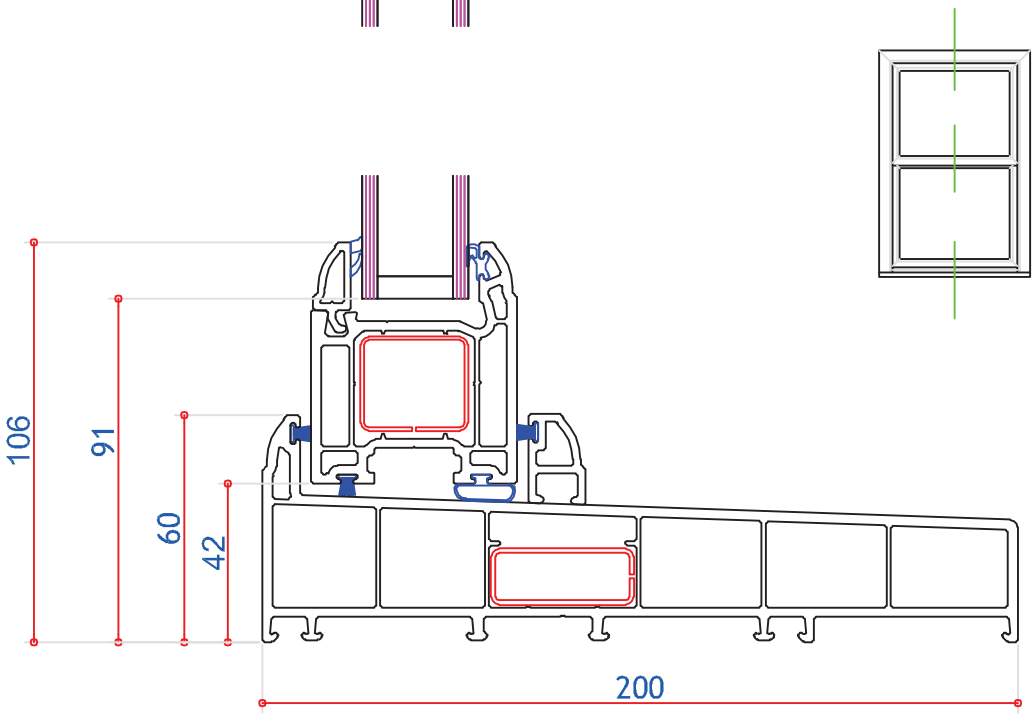

2

DIMENSIONS

VERTICAL CROSS SECTIONS

105mm Deep Bottom Rail & 155mm Cill

105411 Outer Frame
105032 Upper Sash
105033 Lower Sash
105034 Deep Rail
105038 Interlock
105037 Cill Section
105415 Sash Stop
105414 Infill No Brush
105412 Bead Bar

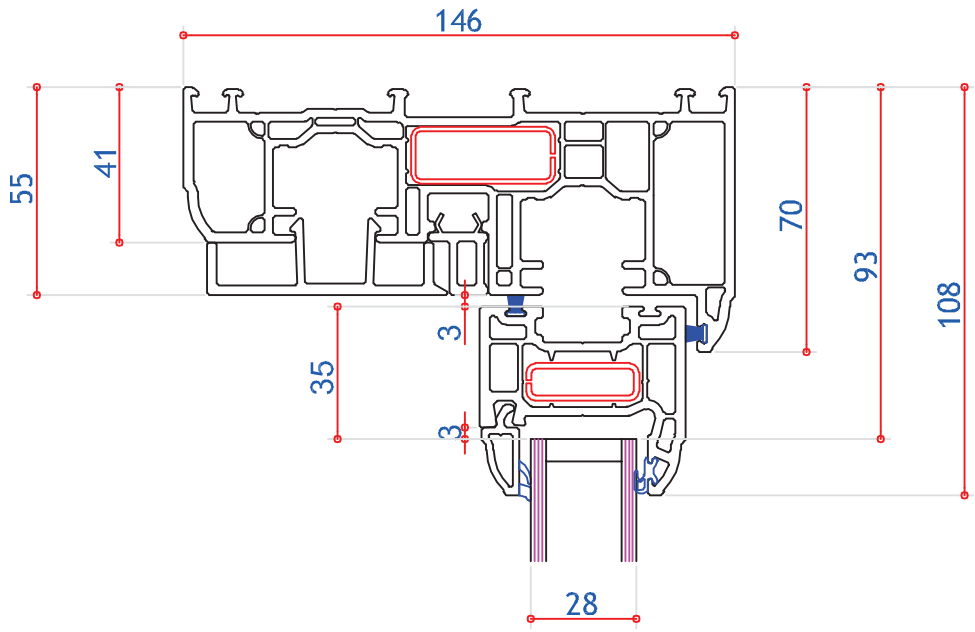

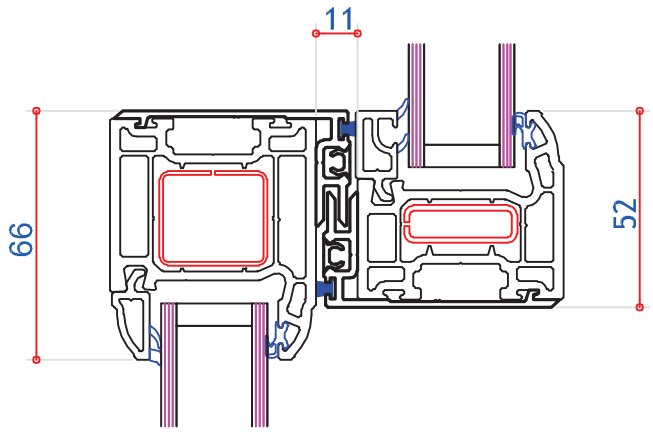

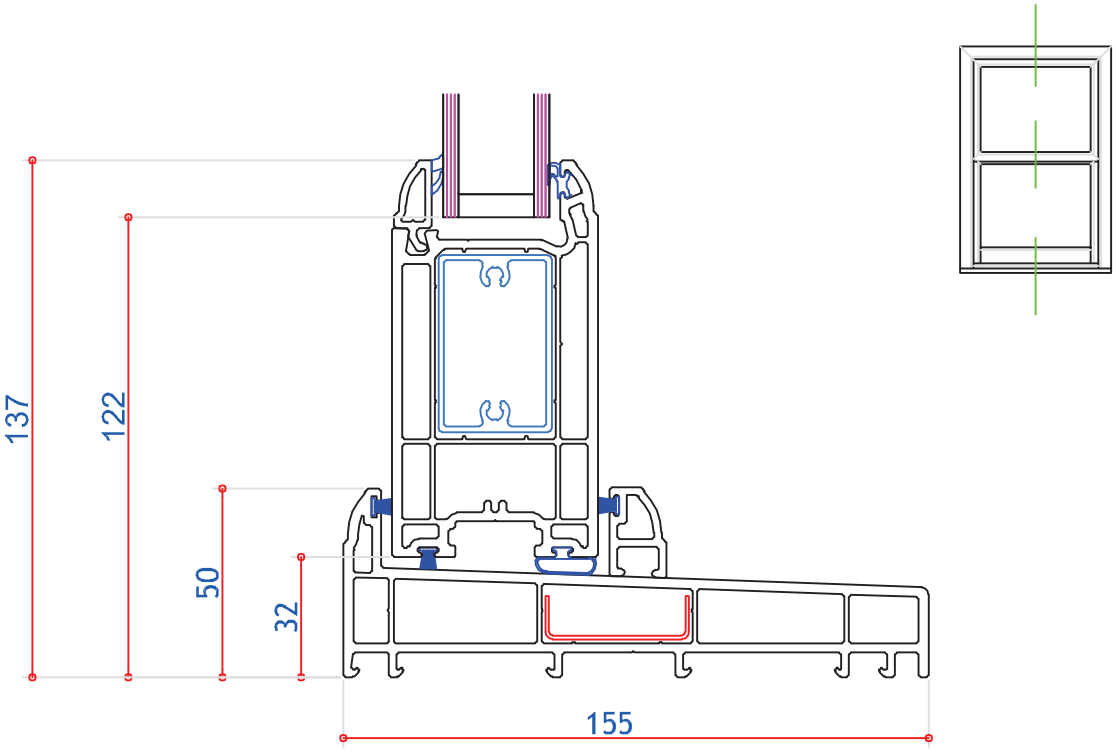

DIMENSIONS

VERTICAL CROSS SECTIONS

105mm Deep Bottom Rail & 155mm Cill

105411 Outer Frame
105032 Upper Sash
105033 Lower Sash
105034 Deep Rail
105038 Interlock
105410 Cill Section
105415 Sash Stop
105414 Infill No Brush
105412 Bead Bar

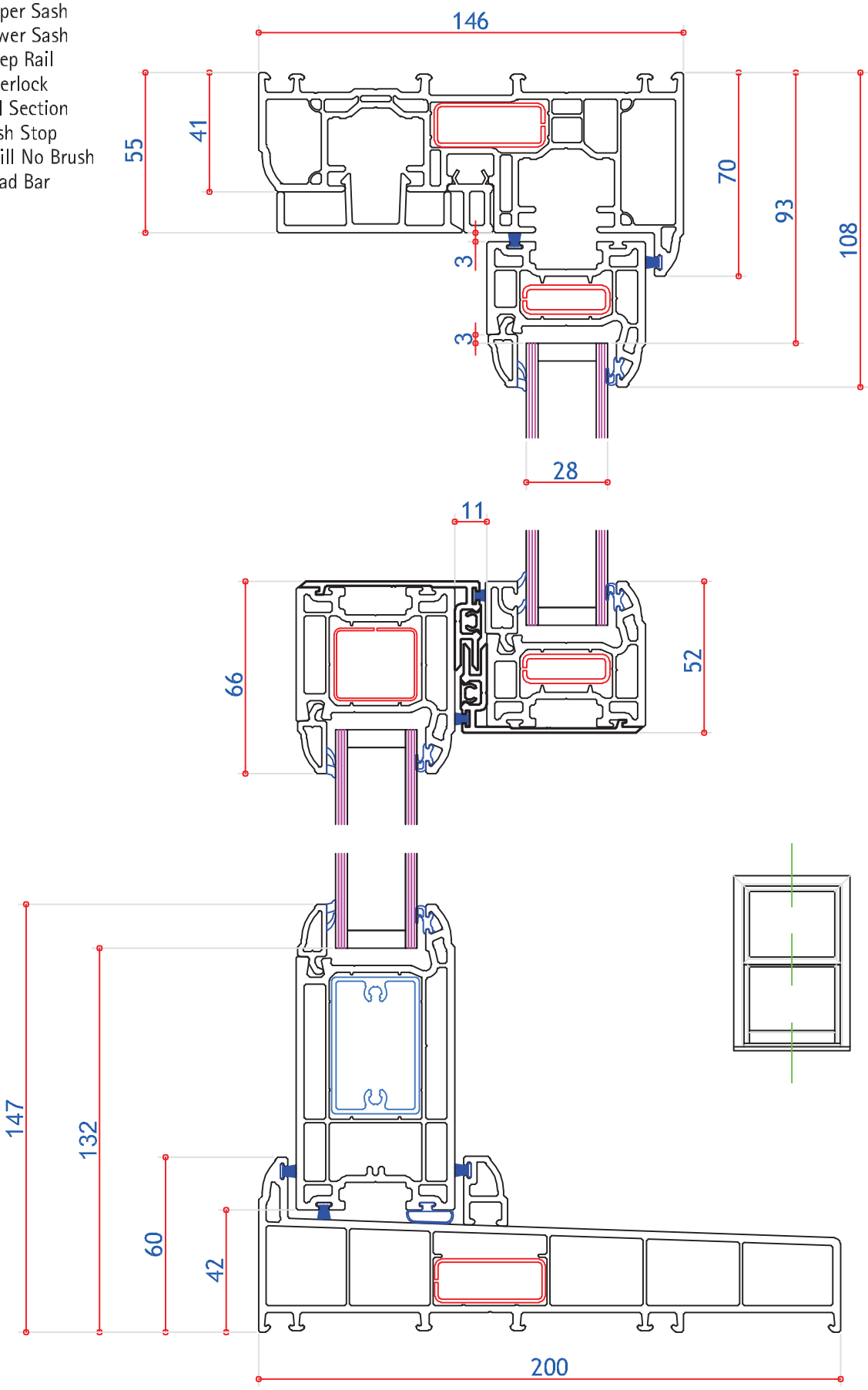

DIMENSIONS

HORIZONTAL CROSS SECTIONS

105mm Deep Bottom Rail & 155mm Cill

105411 Outer Frame
105032 Upper Sash
105033 Lower Sash
105413 Infill

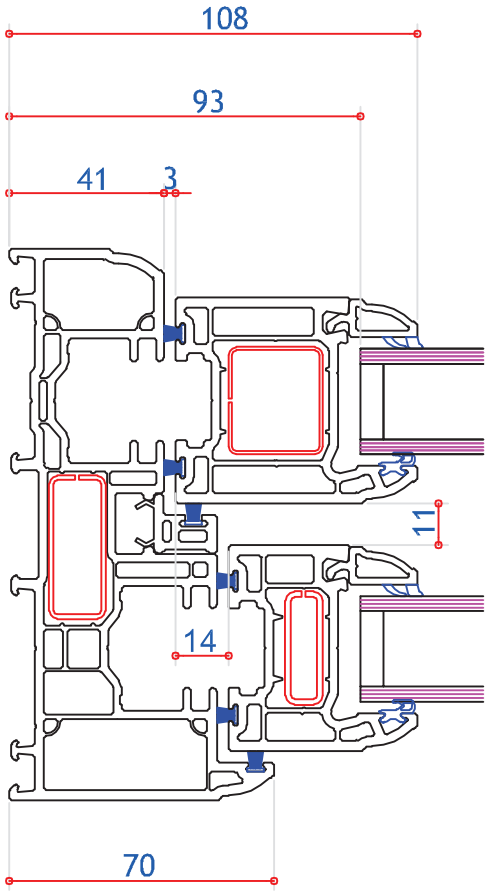

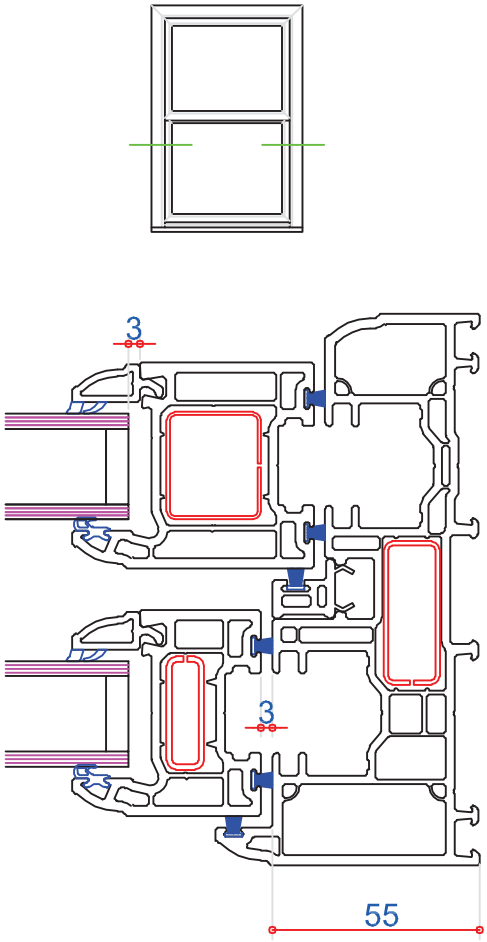

2