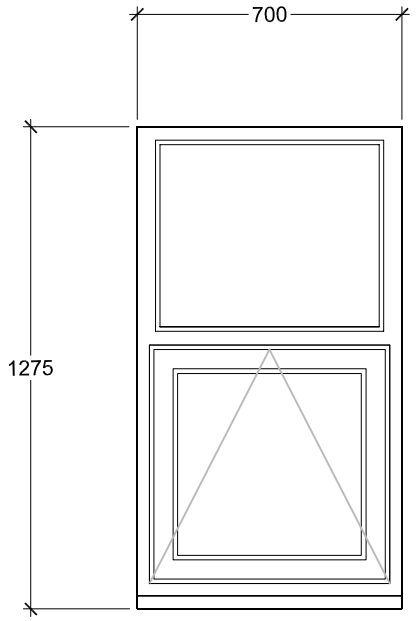

W 15

PVC Casement window

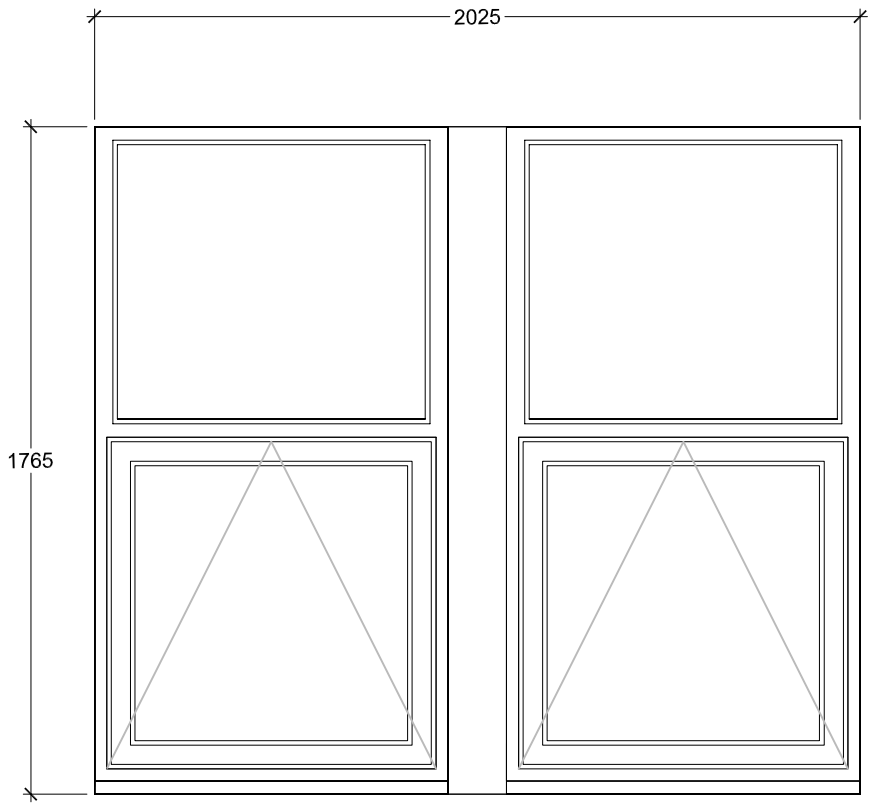

W 16

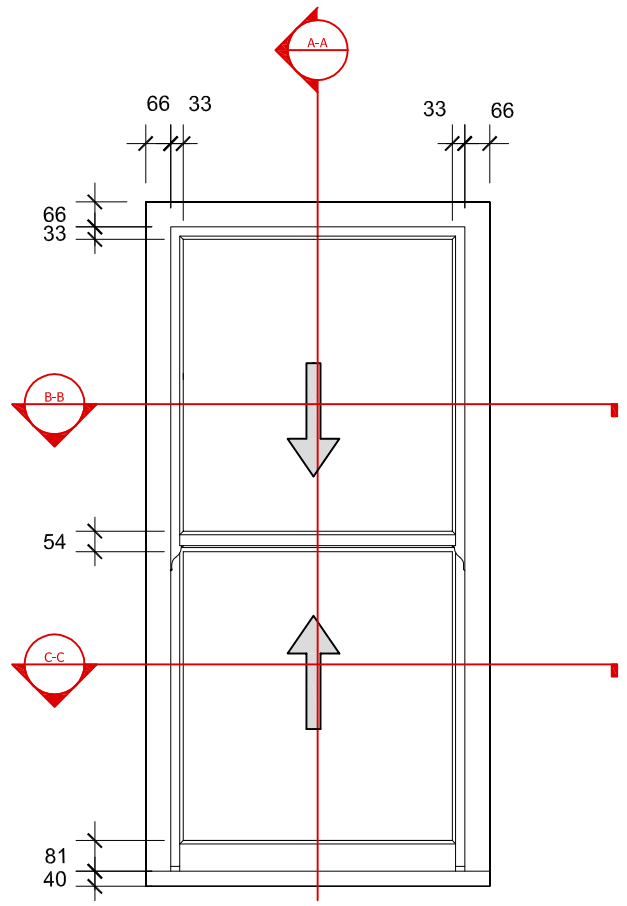

General Notes:

Do not scale dimensions from this drawing, unless for Planning purposes.

The Contractor is responsible for checking all dimensions on site prior to commencement of the works.

This drawing is to be read in conjuction with the specification.

Profile dimensions for all windows the same

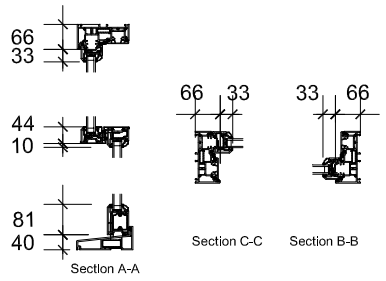

Legacy Range vertical sliding sashes with narrow profile sections to front and side elevation
To match existing front elevation

Standard Detail for Proposed PVC Double glazed windows Rehau Total 70 Range

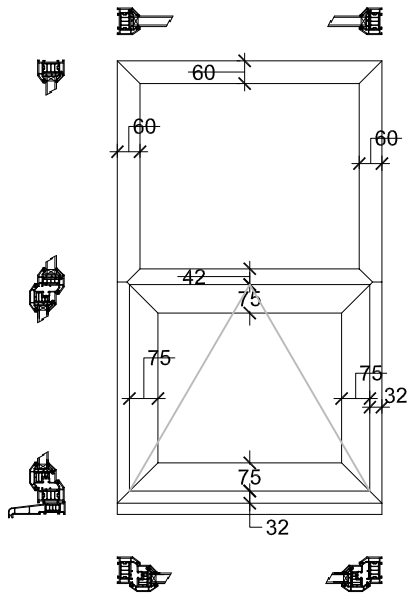

New PVC Frames set behind structure to present 66mm on face to match existing



A 5/03/24 Detail added

Brian Elstone Surveying Services Ltd
Brian Elstone, MCIOB, IMaPS, FCABE
Building Surveyor and Architectural Consultant
CDM Consultant
1 Herne Court, Station Road, Rustington,
West Sussex, BN16 3BQ
Phone: 01903 784884, Mobile: 07710 593021.
Email: brian@elstone.biz

Client:
Mr R. West, 43 Winchester Road, Worthing, BN11 4DH

Project:
Window Replacement

Drawing Title:
Proposed Windows Sheet 5 & Typical window detail

Revision	Date	Description
Scale:	Date:	Drawn By:
1:20	8/12/2023	BE
Drawing Number:		Revision:
1608/011		A