QUOTATION

DATE 31 July 2012

TRADE 2

Premier Direct Windows Ltd
Unit 4+5 Southerncross Ind est
Freemans Road
Portslade
Brighton, Sussex
BN41 1GS
Tel: 01273 277993
Fax: 01273 277990

Quotation No	Quotation Reference	Quotation Specification	Pricing Method	Customer Type	Page 1 of 2
7914	bay window	Glazed / Supply Only	Price Grids	Trade	

WER Rating : C rating

FC60 Bav — **bay window**

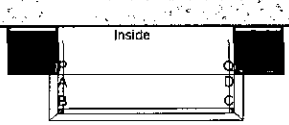

Specification		Pricing	Qty	Nett
Colour	White	150mm cill	3.48	£19.78
Cill	2217 155mm Cill (60)	bay post	3.54	£52.19
Viewed from	Viewed from outside	bay weld	2	£18.36
		Total		**£90.33**

Notes :

1 FC60 Casement — **bay window 1 of 3**

O/A Sizes 440mm x 1770mm (7)

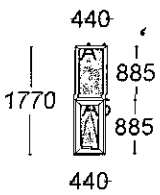

Specification		Pricing	Qty	Nett
Colour	White	Frame Price 440 x 1770	1	£100.80
Frame (Head)	88010 52mm O/F	soft coat	0.30	£4.03
Frame (Cill)	88010 52mm O/F	soft coat tough	0.30	£6.05
Frame (Left jamb)	88010 52mm O/F	Toughened glass	0.30	£2.18
Frame (Right jamb)	88010 52mm O/F	**Total**		**£113.06**
Bead type	Ovolo Bead			
Handle	White Locking Handle			
Viewed from	Viewed from outside			

Glazing Details & Apertures

A1 4-20-4 S/C Total plus Clear : 20mm Silver Spacer
A5 4-20-4 S/C Total plus Clear tuff : 20mm Silver Spacer

2 FC60 Casement — **bay window 2 of 3**

O/A Sizes 1800mm x 1770mm (147)

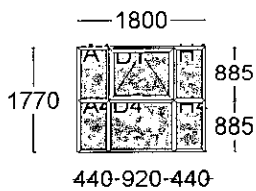

Specification		Pricing	Qty	Nett
Colour	White	Frame Price 1800 x 1770	1	£212.80
Frame (Head)	88010 52mm O/F	soft coat	0.31	£4.22
Frame (Cill)	88010 52mm O/F	soft coat tough	0.31	£6.33
Frame (Left jamb)	88010 52mm O/F	Toughened glass	0.31	£2.29
Frame (Right jamb)	88010 52mm O/F	soft coat	0.58	£7.83
Bead type	Ovolo Bead	soft coat tough	0.72	£14.65
Handle	White Locking Handle	Toughened glass	0.72	£5.29
Viewed from	Viewed from outside	soft coat	0.31	£4.22
		soft coat tough	0.31	£6.33
		Toughened glass	0.31	£2.29
		Total		**£266.25**

Glazing Details & Apertures

A1 4-20-4 S/C Total plus Clear : 20mm Silver Spacer
D1 4-20-4 S/C Total plus Clear : 20mm Silver Spacer
H1 4-20-4 S/C Total plus Clear : 20mm Silver Spacer
A4 4-20-4 S/C Total plus Clear tuff : 20mm Silver Spacer
D4 4-20-4 S/C Total plus Clear tuff : 20mm Silver Spacer
H4 4-20-4 S/C Total plus Clear tuff : 20mm Silver Spacer

ADUR & WORTHING
SERVICES
AWDM/1027/12

VALID 31 AUG 2012

QUOTATION

Quote No : 7914

3	**FC60 Casement**	**bay window 3 of 3**			
O/A Sizes 440mm x 1770mm (7)	**Specification**		**Pricing**	**Qty**	**Nett**
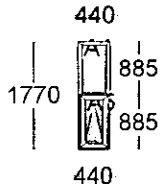	Colour	White	Frame Price 440 x 1770	1	£100.80
	Frame (Head)	88010 52mm O/F	soft coat	0.30	£4.03
	Frame (Cill)	88010 52mm O/F	soft coat tough	0.30	£6.05
	Frame (Left jamb)	88010 52mm O/F	Toughened glass	0.30	£2.18
	Frame (Right jamb)	88010 52mm O/F	**Total**		**£113.06**
	Bead type	Ovolo Bead			
	Handle	White Locking Handle			
	Viewed from	Viewed from outside			

Glazing Details & Apertures

A1 4-20-4 S/C Total plus Clear : 20mm Silver Spacer

A5 4-20-4 S/C Total plus Clear tuff : 20mm Silver Spacer

Glass & Panel Description	**Location**	**Nett**

Sub Totals

Extra Items	**Nett**

Sub Totals

Total	£582.70
VAT @ 20.00%	£116.54
Total (Incl. VAT)	£699.24

NOTES

We look forward to hearing from you.

Yours Sincerely

I/We would like to accept the above quotation, dated 31 July 2012, Reference: bay window, Quotation No: 7914 and agree to the Terms & Conditions overleaf. All items are viewed from the outside, the point denotes the hinge side.

Name: gene baitup

Reference: bay window

Dated: .....

Signed: .....

FULLY CHAMFERED 60MM OPEN-OUT WINDOW (INTERNAL GLAZING)

60mm Chamfered 'Slim' Outer Frame with Slim Transom incorporating BUBBLEX seals, 24mm Double Glazing

ASSEMBLY OVERVIEW

- Open Out Window
  Slim Outer Frame/Slim Transom
- *Fully Chamfered 60mm*
- Fully Chamfered
- 24mm Double Glazing
- Internally Glazed
  Bevelled Bead
- Bubblex Gasket

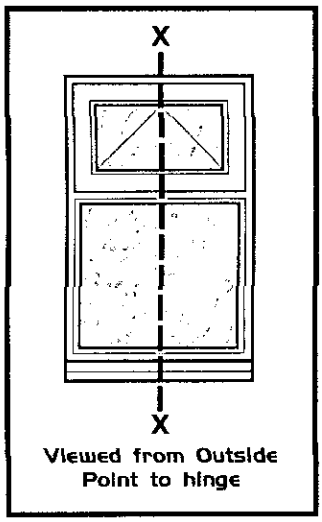

Viewed from Outside
Point to hinge

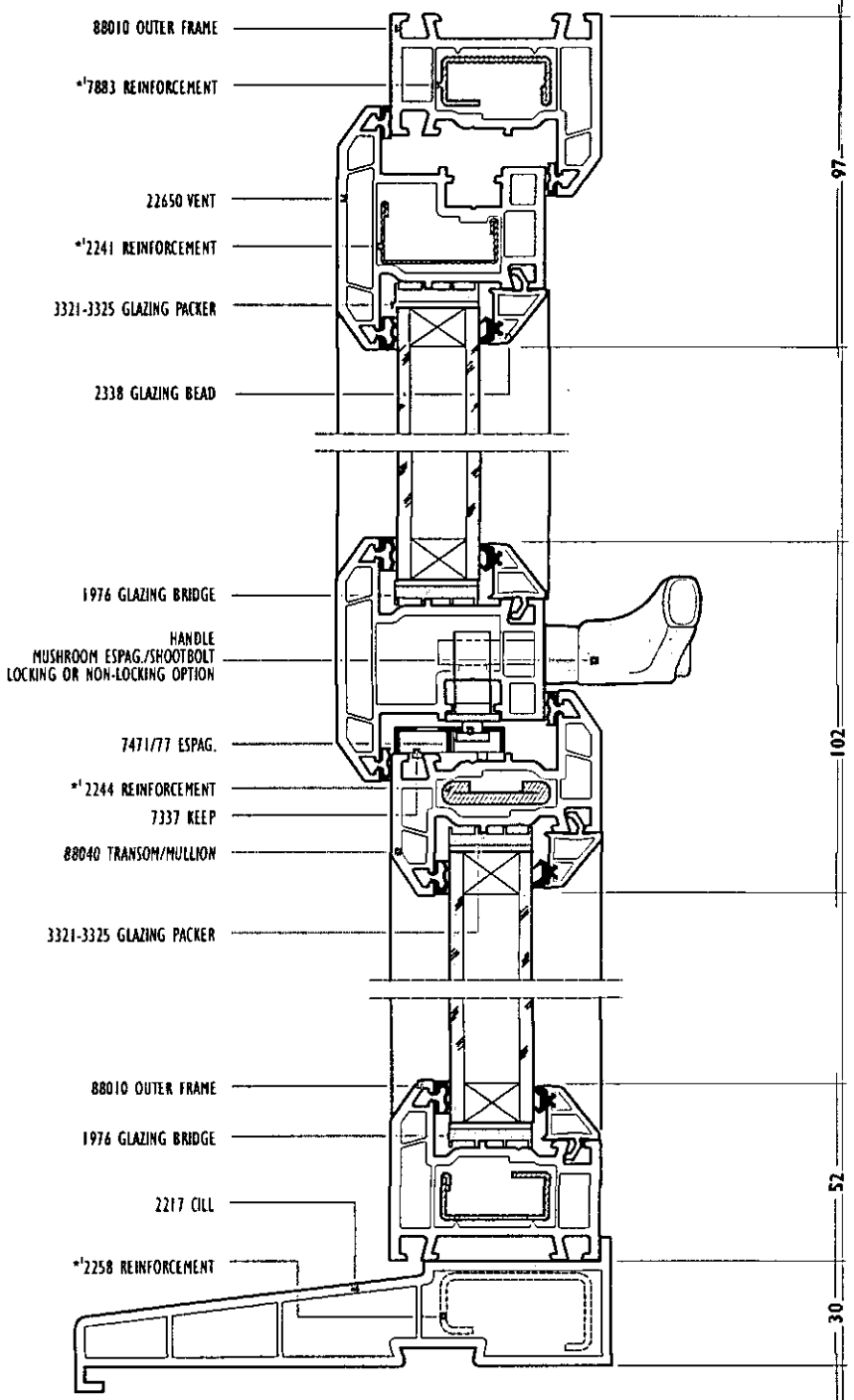

***1 Note:** All reinforcements shown are for diagramatical purposes only. For applications, please refer to the PROFILE 22 Product/Technical Manual.

All dimensions are nominal. DO NOT SCALE

All information in this publication is provided for guidance only and is given in good faith. As it is company policy to continually improve products, methods and materials, changes of specification may be made from time to time without prior notice. This statement does not affect your statutory rights.

© PROFILE22