Redevelopment of 69-75 Brighton Road, Shoreham-by-Sea

Options Appraisal, Remediation Strategy and Verification Plan

On behalf of **New Ways Construction Ltd**

New Ways
Modern, sustainable building

Project Ref: 332610573/100 | Rev: 00 | Date: October 2023

Registered Office: Buckingham Court Kingsmead Business Park, London Road, High Wycombe, Buckinghamshire, HP11 1JU
Office Address: 50/60 Station Road, Cambridge, CB1 2JH
T: +44 (0)1223 882 000 E:Cambridge@stantec.com

Document Control Sheet

Project Name: **Redevelopment of 69-75 Brighton Road, Shoreham-By-Sea**

Project Ref: **332610573/100**

Report Title: **Options Appraisal, Remediation Strategy, and Verification Plan**

Doc Ref: **332610573/100/OARSVP/Rev00**

Date: **3 October 2023**

	Name	Position	Signature	Date
Prepared by:	James Hallier	Senior Engineer	[redacted]	21/09/2023
Reviewed by:	Oliver Belson	Senior Associate		25/09/2023
Approved by:	Catherine Copping	Technical Director		03/10/2023
For and on behalf of Stantec UK Limited				

Revision	Date	Description	Prepared	Reviewed	Approved
00	03/10/2023	First Issue	JH	OB	CC

This report has been prepared by Stantec UK Limited ('Stantec') on behalf of its client to whom this report is addressed ('Client') in connection with the project described in this report and takes into account the Client's particular instructions and requirements. This report was prepared in accordance with the professional services appointment under which Stantec was appointed by its Client. This report is not intended for and should not be relied on by any third party (i.e. parties other than the Client). Stantec accepts no duty or responsibility (including in negligence) to any party other than the Client and disclaims all liability of any nature whatsoever to any such party in respect of this report.

Contents

1 Introduction 1
1.1 Preamble 1
1.2 Context 1
1.3 Background 2
1.4 Other Pertinent Documentation and Reports 3
1.5 Scope of Work 7
1.6 Limitations 7
2 Site Setting 8
2.1 Site Location and Description 8
2.2 Site History 8
2.3 Geological Setting 8
2.4 Hydrological Setting 9
2.5 Hydrogeological Setting 9
2.6 Proposed Development 10
2.7 Geoenvironmental Hazards Identified 10
3 Options Appraisal 12
3.1 Introduction 12
3.2 Considerations 12
3.3 Identified Contamination Risks 12
3.4 Appraisal 13
3.5 Conclusions 19
4 Overall Remediation Strategy 20
4.1 Remediation Objectives 20
4.2 Remediation Stages 20
4.3 Responsible Parties 21
4.4 Remediation Strategies 21
4.5 Unidentified Contamination Protocol 22
5 Enabling Works Remediation Strategy (EWRS) 23
5.1 Introduction 23
5.2 Enabling Works 23
5.3 Tank Removal Protocol 24
6 Construction Phase Remediation Strategy (CPRS) 27
6.1 Introduction 27
6.2 Cover Systems 27
6.3 Water Supply Pipework 28
7 Residual Contamination Remediation Strategy (RCRS) – Post Enabling Works 29
7.1 Background 29
7.2 Staged Approach 29
7.3 Expected Remedial Techniques 30

7.4 Monitoring of Natural Attenuation (MNA) 30
7.5 MNA Enhancements 32
8 Soil and Groundwater Management Principles 35
8.1 Dewatering of Excavations 35
8.2 Soil Management 35
8.3 Soil Excavation and Disposal Protocol 36
8.4 Imported Materials Criteria 37
9 Verification Plan 38
References 39
Essential Guidance for Report Readers 41

Tables

Table 2.1 Encountered Stratigraphy Summary 9
Table 2.2 Summary of Geoenvironmental Hazards 10
Table 3.1 Remediation Techniques Options Appraisal 15

Appendices

Appendix A Regulatory Correspondence
Appendix B Drawings
Appendix C Unexpected Contamination Protocol
Appendix D Material Import Criteria

1 Introduction

1.1 Preamble

1.1.1 Stantec UK Ltd (Stantec) has been commissioned by New Ways Construction Ltd (the Client) to prepare an Options Appraisal and Remediation Strategy to support discharge of planning condition No. 34, which is to inform the remediation of the site for the redevelopment of the former Frosts Cars site at 69-75 Brighton Road, Shoreham-by-Sea (the Site), West Sussex.

1.2 Context

1.2.1 The details of the redevelopment are covered under the planning application AWDM/2039/22 (Adur District Council), with additional details pertaining to the enabling works and construction management detailed under application AWDM/1152/23.

1.2.2 Under the consent for the application AWDM/2039/22, condition No. 34 has been imposed:

> *34. Remediation and Groundwater*
>
> *No development approved by this planning permission shall commence until a remediation strategy to deal with the risks associated with contamination of the site in respect of the development hereby permitted, has been submitted to, and approved in writing by, the Local Planning Authority. This strategy will include the following components:*
>
> *i) A preliminary risk assessment which has identified: all previous uses; potential contaminants associated with those uses; a conceptual model of the site indicating sources, pathways and receptors; and potentially unacceptable risks arising from contamination at the site.*
>
> *ii) A site investigation scheme, based on (i) to provide information for a detailed assessment of the risk to all receptors that may be affected, including those offsite.*
>
> *iii) The results of the site investigation and the detailed risk assessment referred to in (ii) and, based on these, an options appraisal and remediation strategy giving full details of the remediation measures required and how they are to be undertaken.*
>
> *iv) A verification plan providing details of the data that will be collected in order to demonstrate that the works set out in the remediation strategy in (iii) are complete and identifying any requirements for longer-term monitoring of pollutant linkages, maintenance and arrangements for contingency action. The scheme shall be fully implemented as approved, any changes to these components shall require the prior written consent of the Local Planning Authority. The scheme shall be implemented as approved*
>
> ***Reason**: To safeguard groundwater, controlled waters and aquifer from risk of presence of contaminants at the development site, in accordance with NPPF paras 174- 183, Policy 34 of the Adur Local Plan 2017 and Policies SH6 & SH7 of the Shoreham Harbour Joint Area Action Plan (JAAP) 2019.*

1.2.3 Planning consent condition Nos. 35 (Remediation Verification), 36 (Previously Unidentified Contamination), and 37 (Piling Works & Contamination) are also all considered to be pertinent to ground conditions of the Site and are to be addressed under separate covers.

1.2.4 The primary objective of this assessment is to meet the requirements of the National Planning Policy Framework (NPPF) (MHCLG, 2023) and specifically the requirements in Clauses 174 (e) & (f) and 183. Clause 183 states:

Planning policies and decisions should ensure that:

a) a site is suitable for its proposed use taking account of ground conditions and any risks arising from land instability and contamination. This includes risks arising from natural hazards or former activities such as mining, and any proposals for mitigation including land remediation (as well as potential impacts on the natural environment arising from that remediation);

b) after remediation, as a minimum, land should not be capable of being determined as contaminated land under Part IIA of the Environmental Protection Act 1990; and

c) adequate site investigation information, prepared by a competent person, is available to inform these assessments.

1.2.5 The principal planning objective is to ensure that potential risks to human health, buildings, other property, and the natural and historical environment from the contaminated condition of the land are identified so that appropriate action can be considered and taken to address those risks.

1.2.6 As required by the NPPF this work has been carried out in accordance with "established procedures". The approach follows the Environment Agency's (EA) online guidance Land contamination: risk management (LCRM) (EA, 2023). The guidance presents three stages of risk management (Risk Assessment, Options Appraisal, and Remediation). This report seeks to satisfy the requirements of the second stage (Options Appraisal) and Step 1 of Stage 3 (Develop a Remediation Strategy – Remediation).

1.3 Background

1.3.1 Parts i and ii of Condition No. 34 have been addressed by the provision of the following reports submitted to the Adur District Council as part of the planning application:

i) Soil Engineering Limited (SEL), Site Investigation Report. Report reference 2097, dated February 1980.

ii) Ashdown Site Investigation Limited (ASI), Combined Factual Report Interpretative Report on the Site Investigation. Report reference LW16257, dated November 2005.

iii) GeoDyne Geotechnical and Environmental Consultants (GDGEC), Combined Phase I Desk Study and Phase II Ground Investigation Report. Report reference 31149, dated 28 September 2012.

iv) GeoDyne Geotechnical and Environmental Consultants (GDGEC), Final Ground Gas Assessment Report. Report reference 31149/CJP, dated 15 October 2012

v) Stantec UK Limited, Phase 1 Ground Conditions Assessment. Report reference 47462/3501/GCA/R01, dated 17 November 2020

vi) A F Howland Associates Limited, A Report on a Ground Investigation (Factual). Report reference JAH/TJS/20.325, dated 12 March 2021.

vii) Stantec UK Limited, Phase 2 Ground Investigation Report. Report reference 47462/3502/GIR/Rev00, dated 31 March 2021.

1.3.2 The Environmental Health Officer (EHO) at Adur District Council has indicated agreement with the findings of the reports submitted as part of the original planning application, namely reports v and vii listed above, and that the findings of these reports was consistent with those proposed for the neighbouring Free Wharf development[1].

[1] Comments contained with the Planning Officers Report (dated 20 March 2023) on the consent for application AWDM/2039/22

1.3.3 Furthermore, the EA has provided confirmation that the above reports meet their requirements for assessing the potential risks posed to controlled waters and have requested detailed information on how these risks are to be mitigated particularly during construction[2].

1.3.4 The relevant correspondence the EHO and EA relating to the planning applications and Condition No. 34 are reproduced in **Appendix A**.

1.4 Other Pertinent Documentation and Reports

1.4.1 As detailed under the original planning application submission (ref. AWDM/2039/22) the following additional documents and reports are considered pertinent to this report:

i) Technical Appraisal – Urgent River Wall Repair Works (HOP Consulting Limited, reference 15686/01/HOP/RPT/01, dated 27 January 2020)

ii) Sea Wall and Flood Level Appraisal (Stantec UK Limited, reference 47462/TN001, dated 18 March 2020)

iii) Piling Risk Assessment (HOP Consulting Limited, reference 15686/01/HOP/RPT/02, dated 24 June 2020)

iv) Construction & Environmental Management Plan (JT Mackley & Co Limited, reference JTM-FORM-HS-FM006 [Revision O], dated 25 June 2020)

v) Flood Risk and Drainage Strategy (Stantec UK Limited, reference 332510124/4001 Revision D, dated 16 December 2022)

vi) Landscape Strategy (Allen Pyke Associates, reference 2937-RE-101, dated December 2022)

1.4.2 As detailed under the subsequent application to discharge condition 4 (ref. AWDM/1152/23), the following documents and reports are also pertinent to this report;

i) Construction Management Plan (New Ways Construction Limited, dated July 2023).

ii) Response to Planning Condition 4(v) & 4 (vi) (HOP Consulting Limited, reference 15686-HOP-00-XX-RP-S-5000, dated 11 August 2023).

iii) Demolition Risk Assessment and Method Statement (Squibb Group, reference SG7931, dated 14 August 2023)

Technical Appraisal – Urgent River Wall Repair Works (HOP, 2020a)

1.4.3 The river wall was determined to be in an extremely poor condition and to be in an active state of progressive failure. The piles have numerous significant perforations, meaning that water can flow freely through the wall at mid to high tides. The current reinforced concrete capping beam was also assessed to be in very poor condition, with areas of spalled concrete and exposed, corroded reinforcing bar. Repairs to the existing river wall were considered to be impractical due to insufficient residual structural capacity. Therefore, replacement sheet piles were proposed.

1.4.4 The installation of the new piles would fully penetrate the silt layer of the Beach and Tidal Flat Deposits with the toe depth required to achieve geotechnical and structural capacity for the wall to be within the underlying chalk.

[2] Environment Agency letter to Adur & Worthing Councils, reference HA/2023/124783/01, dated 30 January 2023.

1.4.5 The general arrangement of the proposed new sheet pile wall is shown on **Drawing 15686-HOP-ZZ-XX-DR-S-0010** provided in **Appendix B**.

Sea Wall and Flood Level Appraisal (Stantec, 2020b)

1.4.6 This Technical Note highlights the potential for voiding to occur in the underlying soil deposits on-site, with the potential for rising tidal waters (and thereby rising groundwater levels) to trigger an increase in the wash out of fine materials through a number of holes currently present in the existing river-wall.

1.4.7 The latest climate change allowance projection indicates a +1.2 to +1.6m rise in sea level by 2125 for the south-east of England.

Piling Risk Assessment (HOP, 2020b)

1.4.8 The Piling Risk Assessment was completed for the works associated with the construction of the new river wall and concluded that the wall is to comprise driven steel sheet piles. The void between the proposed and current wall is to be backfilled with a certified 'clean' granular material[3]. The new wall is to be installed to the south of the existing wall and therefore deemed to be progressed through natural soils only reducing the potential for human contact with any contaminated spoil arisings and the potential for driving potentially contaminated soils deeper into the ground and the into the underlying chalk aquifer.

1.4.9 It should be noted that imported material should be free from contamination. Criteria for the import of fill and soils onto site are discussed in Section 4.

1.4.10 Furthermore, it was considered by HOP that there would be no new preferential pathways for contamination to migrate to and contaminate either the River Adur or the underlying groundwater across the Site.

Construction & Environmental Management Plan (JT Mackley & Co Limited, 2020)

1.4.11 The Construction Management Plan by JT Mackley & Co Limited provides an overview of the potential risks associated with the construction of the new river wall and the mitigation measures to be adopted to minimise said risks. The main identified potential risks associated with contamination are to be managed by;

i) The provision of spill kits on-site for both land and water spills with a spill drill to be carried out two weeks prior to the start of any associated works.

ii) Reporting of any spills as an environmental incident to the appropriate regulators and stakeholders to ensure effective management of any potential contamination.

Flood Risk and Drainage Strategy (Stantec, 2022)

1.4.12 The report highlights that the Shoreham Harbour JAAP for the regeneration of Shoreham Harbour is relevant to the Site, and includes policies with regards to drainage, groundwater, and contamination.

1.4.13 JAAP Policy SH6.5 indicates that the proposed development lifetime should be a minimum of 60 years (unless specified otherwise by the local planning authority). Policy SH6.7 requires the completion of piling risk assessment where sheet piling is proposed to ensure that any proposed piling works will not results in contamination of groundwater or the migration of contamination off-site.

[3] Importation criteria for 'clean' materials that are to be bought onto the Site as part of the development are appended to this report.

1.4.14 Based upon the projected climate change impacts[4], the risks of flooding, the design level of the flood defences along the boundary of the Site, adjacent to the River Adur, consultation with the LPA and the EA, the river-wall has a design level of 5.6m aOD. The proposed development will be set 5m back from the new river wall to maintain vehicle access to the river front for maintenance works.

1.4.15 A review of the current river wall indicates that is no longer fit for purpose. A licence with the Marine Management Organisation (MMO) was approved on 22nd June 2020, to allow for future works to the river wall. This includes the installation of a new steel sheet piled wall in front of the existing, connected at either end into the adjacent sheet piled walls. The sections were designed to have a minimum design life of 50 years, with an option for an extended design life later if required, using sacrificial anodes to mitigate issues associated with Accelerated Low Water Corrosion (ALWC) and increase this to 100 years. Any voids present, between the existing and new walls, is currently proposed to be backfilled with a self-compacting engineered granular fill such as pea shingle, type 6N or 6P, subject to detailed design. Tidal working and localised dewatering in the temporary state may be required to achieve this and this work if required will be undertaken in full consultation with the EA and MMO.

1.4.16 The proposed finished floor level of the basement is 1.82m aOD and it is unlikely that basement will be significantly impacted by the groundwater levels. However, suitable waterproof sealing of the basement to prevent groundwater egress will form part of the future detailed design for the Site.

1.4.17 Consultation with the EA and the Lead Local Flood Authority (LLFA) was undertaken and it was agreed that the development is permitted to freely discharge to the Adur with the requirement to manage the 1 in 100-year event plus climate change under fully surcharged condition on site. The outfalls from the site are proposed to be at a level which is higher than the modelled 1 in 200-year flood event therefore it is assumed that due to utilising the “over the wall” drainage, the system is less likely to surcharge. It was determined that the proposed development would provide a reduction in the total cover of impermeable area across the Site in comparison with the existing configuration, and therefore in the total surface water runoff discharge volumes.

1.4.18 The proposed surface water drainage across areas of proposed hardstanding (lined permeable paving) is two-fold;

i) Discharge over/through the river wall

ii) Discharge into the existing surface water network of Brighton Road

1.4.19 The proposed surface water drainage strategy is shown on **Drawings 47462/4001/002**, **47462/4001/003**, and **47462/4001/004**.

Landscape Strategy (Allen Pyke Associates, 2022)

1.4.20 The Landscape Strategy sets out the rationale behind the landscape proposals and the key principles which underpin the design. The proposed landscaping across the Site will comprise a mixture of shrub and ground covering plants as well as trees. Soft landscaping is also proposed on the roof spaces of the proposed development. A composite masterplan showing the locations of all the proposed areas of soft landscaping is provided on **Drawing 2937-LMP-101**, appended.

Construction Management Plan (New Ways Construction Limited, 2023)

1.4.21 The Construction Management Plan provides an overview for both the remediation of the existing Site and new construction works, its logistics and traffic management proposals and the management of health, safety, and environmental issues on-site and around the proposed

[4] Sea level rise projections of +1.6m by 2125. An increase in peak rainfall intensity (40% allowance).

development. The main programme of the construction works for the proposed development are as follows;

i) Refurbishment and demolition survey, followed by removal of asbestos and asbestos containing materials (ACMs) by a specialist contractor.

ii) Enabling works, including the demolition and removal of the existing above and below ground structures and utilities and the creation of a piling mat. As part of these works further survey works are proposed to assess the condition of the existing river wall via intrusive excavation.

iii) Civils construction including any contamination remedial works, piling, river-wall works (repair or re-construction), and buried infrastructure inclusive of services and the basement car park.

iv) Construction of all the above ground residential blocks

v) Hard and soft landscaping.

Response to Planning Condition 4(v) & 4 (vi) (HOP, 2023)

1.4.22 As part of the HOP Consulting Limited's report, a subsurface ground penetrating radar (GPR) survey was provided, as well as the results of a structural survey of the steel sheet piled wall along the wharf. The existing sheet piled wall was assessed to be in an extremely poor condition and in an active state of progressive failure, as such a new sheet piled wall is proposed. In conjunction with the main flood defence characteristics of the new wall, the wall has been designed to also ensure the;

i) Elimination of, or reduction in disturbance to existing ground contamination within retained Made Ground;

ii) Elimination of, or reduction in the risk of encountering ground obstructions that prevent pile installation or require intrusive obstruction clearance, further disturbing the ground;

iii) Elimination of, or reduction in the risk of creating of a pathway for contamination of the Principal Aquifer

1.4.23 The GPR survey identified numerous interceptor drainage and storage across the Site, however no further details pertaining to the historical pumps and buried tanks on-site was collected, nor did the survey cover the internal footprint of the existing buildings on-site.

1.4.24 As shown on **Drawing 15686-HOP-ZZ-XX-DR-S-0010**, the proposed sheet piled wall is to be located between 0.45 and 1.00m to the south of the existing wall. The toe of the sheet piles is to be approximately -10m aOD, within the Newhaven Chalk Formation (subject to detailed design to be undertaken as part of the Site enabling works). The resultant void space in between the existing and proposed wall is to be a filled with a self-compacting engineered granular fill such as pea shingle (Type 6N or 6P). The granular material to be used will be certified by the supplier as chemically suitable for use prior to placement to ensure no new sources of potential contamination are introduced onto Site.

1.4.25 Weep holes (Ø 50mm) are to be installed at nominal 3m centres across the new wall at an elevation of 0.8m aOD. These weep holes will enable to release of hydraulic pressure built up during periods of high tide and flooding events to present the structural failure of the wall.

Demolition Risk Assessment and Method Statement (Squibb Group, 2023)

1.4.26 The risk assessment and method statement provided detailed the identified risks to groundworkers and construction workers who will be engaged with the enabling works and the mitigation measures to be employed to reduce these risks to an acceptable level.

1.4.27 Any works in relation to asbestos or any ACMs will be subject to the completion of a Plan of Works, completed by a suitably trained and qualified contractor (subject to classification as licensed work or notifiable non-licensed work).

1.5 Scope of Work

1.5.1 This report represents an options appraisal and remediation strategy as outlined in part iii and a verification plan as outlined in part iv of Condition 34 (detailed in Section 1.2.2).

1.6 Limitations

1.6.1 Unless stated otherwise, information from the desk study and ground investigation has not been included in this report and, where referenced, the reports presenting this information should be read in conjunction with this report. Except where noted, Stantec has not been involved in the supervision and technical direction of the previous studies and investigations undertaken at the site and accepts no responsible for the accuracy and completeness of the data.

1.6.2 Attention is drawn to the appended Guidance Note, which provides advice for the readers of this report.

2 Site Setting

2.1 Site Location and Description

2.1.1 The Site is located at approximate National Grid Reference TQ 22046 05074 on the northern bank of the River Adur in Shoreham-by-Sea. The location context for the Site is shown on **Drawing 332610573/100/01a**, with Site Location Plans presented as **Drawings 332610573/100/01b** and **332610573/100/01c** in **Appendix B**.

2.1.2 The Site occupies an area of approximately 0.69 hectares (ha) and currently comprises an approximately 'T' shaped plot of land used as a car dealership and servicing garage with a hard surfaced forecourt and parking area.

2.1.3 The Site is bound to the south by the River Adur, to the west by Riverside Business Centre and Montgomery Motors (car dealers/garage); to the north by Brighton Road (A259) with the former civic centre beyond and to the east by open brownfield land currently undergoing redevelopment by Southern Housing Group. This neighbouring eastern parcel of land contains an electrical substation and is currently being redeveloped.

2.1.4 Topographically the Site lies upon a broadly level plateau with an elevation of approximately 5.00m above Ordnance Datum (m aOD). There is a very gentle slope southward towards the River Adur.

2.2 Site History

2.2.1 The Phase 1 report identified that the Site has a long industrial history, with the earliest available OS mapping showing a Warf and Coal Yard in the northern central part of the Site (1873-79). Further buildings are noted during this time period on the western portion of the Site labelled 'Timber Yard'. The remainder of the site is recorded as comprising sand and mud. The Site underwent significant reclamation by infilling between the 1930s and 1950s.

2.2.2 During the 1960s the southern part of the Site was redeveloped into a tarmacadam works which extended off site to the east. Two tanks are labelled within this area and associated buildings. Further details on these tanks can be found in the Phase 1 Report (Stantec, 2020a).

2.2.3 The Phase 1 report summarises information received from the Local Authority (Trading Standards of West Sussex Council) regarding the fuel storage tanks on Site. This information suggests that up to seven fuel tanks were present on the site historically, ranging from 13,000 litres to 26,300 litres in capacity and were decommissioned by foam filling in 2005. The locations of the historical tanks are shown on **Drawing 332610573/100/02**, appended.

2.2.4 The walkover undertaken for the Phase 1 report (whilst the Site was still in use) also identified areas where tanks and drums were present with some evidence of surface contamination (staining on hardstanding).

2.3 Geological Setting

2.3.1 The ground conditions in the area of the site, as revealed by the current and historical ground investigations, comprise Made Ground, overlying Beach and Tidal Flat Deposits and the Newhaven Chalk Formation. These conditions are in agreement with the published geological information and known history of the site.

2.3.2 The locations of all the previous ground investigation locations across the Site are shown on **Drawing 332610573/100/02**, appended. The ground conditions encountered are summarised in Table 2.1.

Table 2.1 Encountered Stratigraphy Summary[5]

Stratum	Base of Stratum, m aOD	Thickness Range, m	Description
Made Ground	3.3 to -0.1	0.8 to 4.2	Surface layer of macadam and/or concrete over granular sub-base and a mixture of granular and cohesive fill materials.
Beach and Tidal Flat Deposits	2.1 to -3.3	0.5 to 3.5	Dark grey clayey slightly sandy organic SILT or CLAY, silty SAND or sandy flint and chalk GRAVEL Locally with horizons of black clayey plastic amorphous peat
Newhaven Chalk Formation	Not proved	Maximum 25.3 proved	Structureless CHALK, recovered as cream, silty subangular medium to coarse chalk and flint gravel overlying intact CHALK

2.3.3 During the investigations the visual and olfactory evidence of contamination was recorded within the Made Ground and locally within the cohesive deposits and peat of the Beach and Tidal Flat Deposits.

2.4 Hydrological Setting

2.4.1 The Site is located within the Adur and Ouse catchment. The River Adur, which is adjacent to the southern boundary of the Site, has an overall EA quality classification of 'Moderate'.

2.4.2 The location of the River Adur in relation to the Site is shown on **Drawings 332610573/100/01a** to **332610573/100/01c**, appended. At high tide, this estuarine section of the River Adur rises to physically connect with the Site's southern boundary.

2.5 Hydrogeological Setting

2.5.1 The Beach and Tidal Flat Deposits and the Newhaven Chalk Formation are classified by the EA as Secondary Undifferentiated and Principal Aquifers, respectively.

2.5.2 Based upon the ground conditions recorded on-site there is localised perched water present within the Made Ground, with the aquifer of the Beach Tidal Flat Deposits in hydraulic continuity with the deeper aquifer of the Newhaven Chalk Formation. It was concluded that in theory there isn't a direct pathway between the groundwater beneath the site and the river due to the presence of a retaining wall at the boundary of the Site restricting the flow of groundwater at depth. The river wall was noted to be failing in places, thereby allowing groundwater on-site and the River Adur to be in hydraulic continuity with each other during periods of exceptionally high tides and/or extreme flooding events (HOP, 2020a).

2.5.3 Groundwater monitoring was undertaken between December 2020 and March 2021, which indicate that groundwater levels are deepest at the northern end of the Site and become shallower with proximity to the river. For design purposes, a groundwater elevation of 1.5m aOD was recommended to be assumed at the northern end of the site decreasing to 0m aOD at the southern end of the Site (adjacent to the river).

[5] (SEL, 1980; ASI, 2005; GDGEC, 2012a; AFHA, 2021)

2.6 Proposed Development

2.6.1 The details of the proposed development are proposed under planning application AWDM/2039/22, with additional details pertaining to the enabling works and construction management detailed under application AWDM/1152/23.

2.6.2 The proposed development comprises the construction of four, nine-storey buildings consisting of flats including commercial units and parking for bicycles and cars on the ground floor(s). The remainder of the site will be occupied by outdoor ground level parking and public access mixture of hard and soft landscaping. The proposed development layout across the ground floor of the Site is shown on **Drawing 19_400-PL03**, appended.

2.6.3 An underground car park/basement is also proposed at the site. The layout of the proposed basement is shown on **Drawing 19_400-PL04**, appended.

2.7 Geoenvironmental Hazards Identified

2.7.1 The Phase 2 Ground Investigation Report (Stantec, 2021) included a review of all the previous intrusive investigation works as well as the results of the more recent investigation by A F Howland Associates Limited (AFHA, 2021), which highlighted potential hazards to human health and controlled waters (groundwater and surface water). The identified sources of contamination that are present on-site or affecting the Site are listed in Table 2.2, below.

Table 2.2 Summary of Geoenvironmental Hazards

Contamination Source	Potential Contaminants of Concern	Comments
Made Ground soils associated with the former development of the site	Metals, Hydrocarbons, Asbestos	The development history of the Site includes a Coal Yard, a Timber Yard, a Tarmacadam Works, and more recently a car dealership and servicing garage.
Buried tanks/pumps and associated buried infrastructure	Hydrocarbons	Up to seven fuel tanks were present on the site historically ranging from 13,000 litres to 26,300 litres in capacity. Some of the tanks were decommissioned by foam filling in 2005.
Impacted groundwater by either on- or off-site sources	Metals, Hydrocarbons	The groundwater has been impacted by either on-site sources of contamination such as the buried tanks or former site usage, or has been impacted by off-site usage, such as the off-site tarmacadam works and further car garages.

Human Health Hazards

2.7.2 Concentrations of the identified potential contaminants were mostly below the adopted assessment criteria for a generic 'residential without home grown produce' scenario. The exceptions were exceedances of arsenic, lead, nickel, polycyclic aromatic hydrocarbons (PAHs), petroleum hydrocarbons (TPH), and asbestos (chrysotile, amosite, and crocidolite) all within the Made Ground. No elevated concentrations of contaminants or asbestos were recorded within the underlying natural soils.

2.7.3 Elevated concentrations of TPH were recorded within the groundwater which were indicated to present a potential vapour risk to human health. The groundwater level for the Site in a worst case scenario is anticipated to be 0m aOD with the finish level of the basement designed to be

1.82m aOD, and the final floor level of the commercial and residential units is to be 4.4 and 6.2m aOD, respectively. Based upon the depth to groundwater across the Site, it is assumed that there is only a potential for vapour ingress to occur within the basement level of the proposed development. The proposed basement is to be waterproof sealed, such that there will be no cracks, service entries, or other openings through which any potential groundwater vapours could enter the basement level. In addition, the basement car park will be vented. As such given the limited time of occupation by people at any given time, should any vapour ingress occur it is very unlikely to accumulate to a concentration that would pose a significant risk to human health, and therefore there is not considered to be potential vapour risk from groundwater to human health that will require any remedial works in those parts of the development where underlain by basements.

2.7.4 Ground gas and vapour monitoring of the superficial soils (including both the Made Ground and organic-rich natural soils) indicated that remedial ground gas or vapour protection measures would not be required at the site. However, further monitoring of vapours was recommended following the removal of the underground fuel tanks to determine if any hydrocarbon impacted soils are to remain *in situ* and thereby present an increase in the likelihood of vapour ingress into the proposed buildings from a potential near surface soil source particularly in the areas where there is not a basement car park proposed.

Controlled Waters Hazards

2.7.5 The results of the groundwater analysis undertaken show that the majority of the measured concentrations of potential groundwater contaminants are below the selected assessment criteria (Water Framework Directive Environmental Quality Standards (EQS) and Drinking Water Standards (DWS)). The exception to this are copper, nickel, zinc and PAHs when compared to the EQS. Concentrations of arsenic, chromium, nickel, selenium and PAHs exceed the DWS. Due to the brackish nature of the groundwater and surface water within the River Adur, abstraction for drinking water is not carried out presently nor is it likely to occur in the future and therefore, only the recorded exceedances with respect to EQSs are considered as requiring mitigation measures/ remediation.

2.7.6 It was concluded in the Phase 2 Ground Investigation Report (Stantec, 2021) that in theory there isn't a direct pathway between the groundwater beneath the Site and the River Adur due to the presence of the river wall at the southern boundary. In reality this wall is noted to be in a state of progressive failure with numerous holes (HOP, 2020a) which allow water to pass through the current wall during periods of high tide or flooding events.

2.7.7 Given the structural failing of the current wall, a new river wall is proposed to ensure the protection of the development from future flooding events. As part of this construction the lateral movement of groundwater will be impeded but not entirely restricted, given the need for weep holes to dissipate water accumulation pressures behind the wall and reduce future failure. The new river wall will provide some form of betterment with respect to restricting contamination migration by reducing the volume of water which can pass through the wall between the Site and the River Adur but in isolation it will not negate this pathway and therefore not reduce the overall potential risks posed.

3 Options Appraisal

3.1 Introduction

3.1.1 This section of the report identifies the remediation strategy that could be utilised to effectively manage/mitigate the identified hazards associated with the soils and groundwater at the site. In determining the most effective remediation option(s) for the site, consideration needs to be given to a number of factors, stating (where appropriate) the suitability and limitations of each chosen method.

3.1.2 The objective of the remediation strategy is to facilitate the development of the Site and address both chronic and acute risks posed by soil and groundwater contamination upon the identified receptors by reducing or breaking the relevant pollutant pathway linkages to an acceptable level.

3.2 Considerations

3.2.1 The following elements have been considered for the Site with respect to remedial options, where necessary/appropriate, during the feasibility and options appraisal stage:

i) The degree to which risks need to be reduced or controlled

ii) The time within which the remediation strategy is required to take effect

iii) The practicability of implementing and, where appropriate, maintaining the strategy

iv) The technical effectiveness of the strategy in reducing or controlling risks

v) The longevity of the strategy - i.e. the potential for the proposed remediation technologies to mitigate against contaminant rebound

vi) The sustainability of the strategy (i.e., how well it meets other environmental objectives, for example on the use of energy and other material resources, and avoids or minimises adverse environmental impacts in off-site locations, such as neighbouring residents, or on other environmental compartments, such as air and water) including the potential for climate change impacts to affect the efficacy of the proposed remedial strategy

vii) The cost of the strategy; benefits of the strategy – all remediation strategies should deliver direct benefits (the reduction or control of unacceptable risks) – but many have merits that extend well beyond the boundaries of the site

viii) The legal, financial, and commercial context within which the site is being handled including the specific legal requirements that remediation has to comply with, and the views of stakeholders on how unacceptable risks should be managed

3.2.2 Risks posed by contaminated soils and water to construction workers and groundworkers are to be effectively managed via measures detailed in the contractors method statement and risk assessment and associated management plans (JT Mackley & Co Limited, 2020; New Ways Construction Limited, 2023; Squibb Group, 2023). As such, acute risks posed to construction/maintenance workers fall outside the remit of this appraisal.

3.3 Identified Contamination Risks

3.3.1 The previous investigation, including generic quantitative risk assessment have identified the following potential pollutant linkages:

i) Hydrocarbon contamination within soils surrounding former underground storage tanks and delivery infrastructure, free phase hydrocarbons on groundwater and dissolved phase hydrocarbons within groundwater present a hazard via migration into the Principal aquifer beneath the site, to the River Adur.

ii) Elevated vapour concentrations within the Made Ground that represent a significant risk to human health.

iii) Locally elevated concentrations of arsenic, lead, nickel and PAHs[6] within the Made Ground that represent a significant risk to human health.

iv) Elevated concentrations of arsenic, chromium, copper, nickel, selenium, zinc, PAHs, and potentially TPH within the groundwater, which present a significant risk to controlled waters.

v) Asbestos containing materials (ACMs) and loose asbestos fibres (chrysotile, amosite, and crocidolite) present within the Made Ground present a potential risk to human health.

3.3.2 There is a potential for contamination to be mobilised through construction activities which may create new pollutant linkages. These new linkages may allow the identified and potentially unidentified contamination to impact upon a new receptor or upon an existing receptor by a previously unaccounted for pathway. As such the above list of hazards and the associated Options Appraisal may need to be updated once a detailed construction methodology has been completed and/or a new linkage has been identified that requires additional mitigation or remediation.

3.3.3 Recommended mitigation measures to reduce the potential for construction activities to create new pathways are detailed in the associated piling risk assessment for the river wall (HOP, 2020b). An environmental piling risk assessment for the proposed building construction will also be required (including to discharge of the planning consent condition No. 37) and will be issued separately and as such is not considered further in this report.

3.4 Appraisal

3.4.1 Given the hazard posed by the retention of the former fuel tanks on-site, as part of the enabling works the tanks and associated infrastructure will be removed. Gross contamination identified in the immediate vicinity of the tanks and infrastructure will also be removed at this time. This will remove the majority of primary hydrocarbon contamination sources. Further details on this process are detailed in Section 5.3.

3.4.2 The construction of the basement level will also require the removal of Made Ground from these areas of the Site and associated contamination. The locations of the known buried tanks are broadly outside of the footprint of the proposed basement area.

3.4.3 Buried water supply pipework is proposed is to be upgraded from standard polyethylene material pipework to a material type that is resistant to chemical contamination. Further details on this process are detailed in Section 6.3.

3.4.4 The following potential pollutant linkages are taken through the Options Appraisal:

iii) Locally elevated concentrations of arsenic, lead, nickel and PAHs[6] within the Made Ground left *in situ* following the basement excavation and construction that present a potentially unacceptable risk to human health.

[6] naphthalene, benzo(a)anthracene, benzo(b)fluoranthene, chrysene, and benzo(a)pyrene

iv) Elevated concentrations of arsenic, chromium, copper, nickel, selenium, zinc, PAHs, and TPH within the groundwater, which present a potentially unacceptable risk to controlled waters.

v) Asbestos containing materials (ACMs) and loose asbestos fibres (chrysotile, amosite, and crocidolite) present within the Made Ground left *in situ* following the basement excavation and construction that present a potentially unacceptable risk to human health.

3.4.5 It should be noted for point iv) that through the tank removal and the excavation and removal of the Made Ground (in basement construction) a large proportion of the identified primary sources of these contaminants will have been removed. During the construction further removal of grossly contaminated soils will also be undertaken during the works. Removal of these soils and associated contamination during enabling works and construction will have a positive impact. Further investigation and monitoring is proposed following the main enabling works and groundworks to quantitatively assess the potential risks posed by residual contamination and thereby determine what (if any) additional remedial mitigation works will be required.

3.4.6 Table 3.1 presents a summary of the potential remediation options and their applicability to the identified sources, pathways, and receptors detailed in Section 3.3 (excluding those associated with the buried tanks and removal of Made Ground in the areas of the proposed basement) along with a discussion of the practicalities of these options.

Table 3.1 Remediation Techniques Options Appraisal

Remedial Method	Media [1]	Description	Target Contaminants					Appraisal Criteria			
			iii [a]	iii [b]	iv [a]	iv [b]	v	Practicality	Durability / Sustainability	Suitability	Climate Change Impacts
Engineering Based Methods											
Containment - cover system	S	Clean cover soil imported to site in areas of soft landscaping. All other areas covered in buildings or hard landscaping with encapsulated drainage (Stantec, 2022).	✓	✓			✓	Would be readily implemented at the Site and would only be required in the soft landscaped areas as proposed hardstanding and building footprints would act as a capping layer elsewhere.	Long term – may require inspections to demonstrate integrity is maintained. Certified suitable for use topsoil and subsoil materials to be imported. Separating geotextile could be placed to prevent future mixing with soils remaining in *situ*.	Economic, practicable, feasible and commonly used and well understood approach to break dermal contact, ingestion and dust inhalation pathways.	Potential for flooding or storm events to cause damage to a cover system. The proposed river wall has been designed to accommodate the potential increase in flooding frequency and intensity due to Climate Change over the proposed lifetime of the development
Excavation and disposal	S	Removal of soil source via physical excavation and off-site disposal to landfill	✓	✓			✓	Excavation and off-site disposal at the Site of impacted Made Ground soils is viable given that large quantities of Made Ground are already being excavated on-site as part of the basement construction works. The wholesale excavation and removal of the Made Ground across the entire Site is likely to have significant economic cost given the maximum depths of Made Ground recorded and its presence up to and beyond the Site boundaries.	Long term – once the source of contamination has been removed then this represents the end of remediation. Not a very sustainable option given the large quantities of Made Ground will be required to be disposed off site to landfill.	Commonly used and well understood in the industry. Could be readily verified through sampling of the sides and the base of the resultant excavation. Would only apply to any localised (potentially unidentified areas of contamination). Wholesale excavation and disposal of soils across the entire site would be uneconomic and not practicable given the need for excavation support via temporary works.	No projected impacts as short term works proposed to remove the source of contamination
Hydraulic binder	S	Treatment of soils using clays, a lime or cement binder or vitrification, which effectively locks contaminants in a solid phase.	✓	✓			✓	Pilot trials required. Large scale plant to undertake the excavation and treatment. Excavation not viable due to same reasons as wholesale excavation and disposal. Will require agreement with Adur District Council and EA for mobile plant licensing and movement of material under the CL:AIRE Code of Practice.	Long term durability. No movement of soils off site, or disposal at landfill sites of contaminated soils	Disproportionate cost, timescales and complexity for the contaminants when compared to other treatment options in the context of the proposed development.	Consideration of changes to groundwater level changes on-site on account of sea level rise may lead to a containment cell becoming saturated.
Containment - hydraulic barrier	W	These barriers can be constructed of modified clay, steel piles, non-permeable plastic or slurry and can be installed into less permeable layers. Installation of such a barrier results in groundwater build-up behind the structure (i.e. within the site)			✓	✓		A steel sheet piled wall is already in situ on-site (albeit in a failing condition). A new steel sheet piled wall will be installed as part of the development. However, this new wall will not present an impermeable barrier given the presence of weep holes to allow a discharge of the water pressure built up behind the wall to preventing future structural failure. Given the tidal pressures upon the hydrogeological regime across the Site it is unlikely that a complete hydraulic barrier would be practical, however the proposed new river wall would provide a positive effect upon the development through betterment as a form of embedded mitigation.	The proposed steel sheet piled wall has a design life of 50-years with a possibility to extend to 100-years.	A new steel sheet piled wall is already required given the structural failings of the existing wall. As such allowance has already been made within the development to ensure suitable timeframes and space to complete this as part of the development works. Given the need for weep holes to prevent structural failure of the new wall, it does not present a complete hydraulic barrier.	The new sheet piled wall has been designed in accordance with the recommended climate change allowances for sea level rise given that the River Adur is tidally influenced.

Remedial Method	Media [1]	Description	Target Contaminants					Appraisal Criteria			
			iii [a]	iii [b]	iv [a]	iv [b]	v	Practicality	Durability / Sustainability	Suitability	Climate Change Impacts
Containment - hydraulic barrier	W	A hanging wall could be considered where the wall protrudes in the groundwater table to impede the movement of lower density or floating contaminants.				✓		A hanging wall could be readily constructed on-site, but would be limited to only addressing lower density or floating contaminants such as a NAPL.	The bentonite slurry used to construct the hanging wall would not be proficient at withstanding attack by saline conditions posed by the River Adur during periods of high tide.	A hanging wall would only divert the contamination from directly reaching the River Adur, and would be required to be combined with other remedial techniques to provide treatment/removal	Detailed hydrogeological modelling will be required given the potential for hydrological and hydrogeological changes due to Climate Change.
Biological Methods (*in situ*)											
Bioventing	S	Air or oxygen flowed into the ground to encourage existing microorganisms		✓				Could be relatively easily achieved.	Medium term solution– requires re-measurements to demonstrate effectiveness	Disproportionate cost, timescales and complexity for the nature and extent of the impacts observed.	Projected changes to surface soil temperature will need to be taken into consideration.
Landfarming	S	Contaminated soils are mixed with soil amendments such as soil bulking agents and nutrients, and then they are tilled into the earth. The material is periodically tilled for aeration.		✓				Could be relatively easily achieved, however would likely lead to across a timescale in excess of the proposed construction timeframe	Medium term solution – requires aeration and monitoring	Viable but likely only for localised grossly impacted areas of soil. Likely to be disproportionate cost, timescales and complexity for the compared with windrows. Tilling of asbestos impacted soils would introduce multiple opportunities for fibre release and increased associated risk.	Projected changes to surface soil temperature will need to be taken into consideration.
Biosparging	S / W	Enhanced natural attenuation through introduction of air or agents.		✓		✓		Could be relatively easily achieved.	Medium term solution – requires monitoring to demonstrate effectiveness	Feasible technically, practically and sustainable approach which could be implemented alongside other techniques. Ongoing economic cost associated with monitoring	Detailed hydrogeological modelling will be required given the potential for hydrological and hydrogeological changes due to Climate Change.
Monitored Natural attenuation	W	Programme of monitoring of the groundwater (with potential for enhancement to speed up the natural processes)			✓	✓		Can be relatively easily implemented with little if any disturbance to the site activities. Requires a serviceable groundwater monitoring network to be maintained throughout the development works.	Long term solution for the duration of the declining concentrations to be recorded at a satisfactory level, and likely to extend beyond the construction phase of the development	Suitable to follow other forms of remedial options which address the primary soil source of contamination. Likely to be preceded by more proactive remedial techniques in the construction phase.	Detailed hydrogeological modelling will be required given the potential for hydrological and hydrogeological changes due to Climate Change.
Biological Methods (*ex situ*)											
Biopiles	S	Excavated soils are mixed with soil amendments, formed into compost piles and enclosed for treatment with additional air flow.		✓				Large plant and area required to complete these works. Space on-site is limited and as such will preclude the adoption of this technique. Time required to enable degradation of organic contaminants is likely to be in excess of the proposed construction timeframe. Will not be effective in treatment of inorganic or metalloid contamination	Long term solution	Viable but likely only for localised grossly impacted areas of soil. Likely to be disproportionate cost, timescales and complexity for the compared with windrows.	No projected impacts as works proposed will reduce the source of contamination to acceptable concentrations
Slurry phase biotreatment	S	Mixing soil or sediment with water and additional additives generates an aqueous slurry. The slurry is mixed in order to keep solids suspended and microorganisms in phase with the soil contaminants. On conclusion of the process, the slurry is dewatered and the treated soil is re-used.		✓				Could be relatively easily achieved, however would likely lead to across a timescale in excess of the proposed construction timeframe	Long term solution	Likely to be disproportionate cost, timescales and complexity for the when compared with other techniques.	Projected changes to surface soil temperature will need to be taken into consideration.

Remedial Method	Media [1]	Description	Target Contaminants					Appraisal Criteria			
			iii [a]	iii [b]	iv [a]	iv [b]	v	Practicality	Durability / Sustainability	Suitability	Climate Change Impacts
Windrows	S	Compositing to promote conditions for *ex situ* bioremediation		✓				Could be relatively easily achieved, however space on-site is limited and as such may preclude the adoption of this technique. Time required to enable degradation of organic contaminants is likely to be in excess of the proposed construction timeframe	Medium term solution	Some form of this could be viable at the Site to achieve remedial objectives, particularly of any previously unidentified localised grossly impacted soils. May require re-testing or dust suppression measures to manage risk of multiple asbestos fibre release opportunities.	Projected changes to surface soil temperature will need to be taken into consideration.
Chemical Methods											
Soil flushing	S	Soil flushing is a technology used for extracting contaminants from the soil. It works by applying water to the soil. The water has an additive that enhances contaminant solubility. Contaminants that are dissolved in the flushing solution are leached into the groundwater, which is then extracted and treated.	✓	✓				Requires downgradient wells, which are not possible on-site given the confines posed by the River Adur, presents potential risk to River Adur and underlying Principal Aquifer	Medium term solution – requires frequent monitoring to demonstrate effectiveness and ensure no rebound	Disproportionate cost, timescales and complexity for the nature and extents of contamination observed. Would need trialling to ensure efficacy. More technically viable and appropriate techniques available	Detailed hydrogeological modelling will be required given the potential for hydrological and hydrogeological changes due to Climate Change.
Solvent extraction	S	Solvent extraction uses an organic solvent as an extractant to separate organic contaminants from soil. The organic solvent is mixed with contaminated soil in an extraction unit. The extracted solution then is passed through a separator, where the contaminants and extractant are separated from the soil.		✓				Technically feasible on Site for remediation of although potentially present unacceptable risk to River Adur and Principal Aquifer	Long term solution	Disproportionate cost, timescales and complexity for the nature and extent of contamination identified.	No projected impacts
Surface amendments	S	Products added to the soil thereby limiting exposure pathways or immobilizing contaminants.	✓					Technically feasible on Site	Long term solution	Not applicable for this site or the contaminants of concern identified.	No projected impacts
Chemical oxidation	S / W	Injection of chemical compounds via a series of injection wells across the site to promote degradation of contaminant species.		✓		✓		Can be injected into the unsaturated and saturated zones via wells. Achievable at the site.	Long term solution – requires monitoring to demonstrate effectiveness	Feasible technically, practically and sustainable approach which could be implemented alongside other techniques. Ongoing economic cost associated with reapplication of chemical compounds and monitoring	Detailed hydrogeological modelling will be required given the potential for hydrological and hydrogeological changes due to Climate Change.
Physical Methods											
Soil washing	S	Soil washing or soil scrubbing is a water-based process for remediation of excavated soils. Soil washing removes contaminants from soils by dissolving and/or separating, suspending contaminants on soil particles into the wash water, wash water can be dosed with chemicals to improve the washing characteristic (such as pH adjustment, surfactants, etc). The technique also concentrating contaminants into a smaller volume of soil through particle size separation and attrition scrubbing.	✓	✓				Large amounts of room required for stockpiling, plant and treatment. Pilot trials will be required to ensure viability with the identified contaminants, as such timescales may not be viable for the project.	Long term solution	Disproportionate technique for the remaining contamination risks	No projected impacts
Air sparging	S/ W	Injecting air directly into groundwater volatilizing contaminants and enhancing biodegradation.				✓		Could be achieved on site practically; however, timescales may not be viable for the project. Only addresses groundwater contaminants	Medium term solution – monitoring required to ensure effectiveness/check rebound	Feasible technically, practically and sustainable approach which could be implemented alongside other techniques. Ongoing economic cost associated with monitoring	Detailed hydrogeological modelling will be required given the potential for hydrological and hydrogeological changes due to Climate Change.

Remedial Method	Media [1]	Description	Target Contaminants					Appraisal Criteria			
			iii [a]	iii [b]	iv [a]	iv [b]	v	Practicality	Durability / Sustainability	Suitability	Climate Change Impacts
Pump and Treat	W	Retrieval of groundwater and/or NAPL from beneath the Site using one or more extraction wells, trenches, or galleries, and treating the water in an above-ground treatment system prior to discharge			✓	✓		It would likely require the installation of additional extraction wells on-site in the pathway of the identified contamination plume. Likely to be a viable technique to address residual contamination with another technique required to address the contamination source.	Medium term solution	Would likely be suitable for the Site where any residual contamination or NAPL is present within or upon the groundwater. Could be readily enhanced by using a hydraulic barrier to “capture” the groundwater.	Detailed hydrogeological modelling will be required given the potential for hydrological and hydrogeological changes due to Climate Change.
Permeable reactive barrier	W	The barrier can be constructed of modified clay, steel piles, non-permeable plastic or slurry and can be installed into lower, less permeable layers (such as the Tidal Flat Deposits). Treatment “gates” will permit controlled groundwater flow in defined areas where targeted treatment can be applied. Other technologies available include semi-permeable barriers that act as reactive filters, trapping the contaminants as the groundwater passes through them.			✓	✓		Would be a major engineering operation to install, and would require detailed design in association with the proposed steel sheet piled wall already required.	Medium term solution	Would be a major engineering operation to install and produce noise and vibration. Would not address soil impacts. As such, limited technical benefit to achieving remediation goals	Detailed hydrogeological modelling will be required given the potential for hydrological and hydrogeological changes due to Climate Change.
Thermal Methods											
Incineration / Thermal desorption	S	Use of heat to either destroy or promote volatilisation of contaminants using ex situ techniques.	✓	✓			✓	Significant cost and plant required	Long term durability Large amounts of energy require, highly unsustainable	Only used on large scale projects and on significant volumes of materials which means that these techniques would be unsustainable with regards to energy input and economically.	No projected impacts

Notes
[1] S = Natural soils, Made Ground, and sediments; W = Groundwater and Surface Water
[a] Inorganic heavy metals contamination only
[b] Organic hydrocarbon (PAHs and TPH) contamination only

3.5 Conclusions

3.5.1 Betterment will occur through the redevelopment construction via the removal of the underground storage tanks and infrastructure, adjacent grossly contaminated soils, and the removal of large amounts of Made Ground through the basement construction. However, some identified, and potentially unidentified contamination, will still be present on-site following the initial enabling works. Given that none of the proposed remedial techniques detailed in the Options Appraisal will cover all of the identified contamination risks (regardless of in-built mitigations), a combined and staged approach must be adopted to accommodate the multifaceted nature of the contamination risks.

4 Overall Remediation Strategy

4.1 Remediation Objectives

4.1.1 In line with best practice, it is proposed to adopt, where possible, remediation that is compatible with sustainable development principles, as detailed within the Options Appraisal.

4.1.2 The following key principles should be considered in the design, implementation and reporting of remediation strategies:

i) Principle 1 - Protection of human health and the wider environment

Remediation should remove/ control unacceptable risks to human health and protect the wider environment, and in particular controlled waters, now and in the future, for the agreed land use and give due consideration to the costs, benefits, effectiveness, durability and technical feasibility of available options.

ii) Principle 2 - Safe working practices

Remediation works should be safe for all workers and for local communities and should minimise impacts on the environment.

iii) Principle 3 - Consistent, clear and reproducible, evidence-based decision-making

Risk-based remediation decisions are made having regard to environmental, social and economic factors, and considering both current and likely future implications.

iv) Principle 4 - Record keeping and transparent reporting

Remediation decisions, including the assumptions and supporting data used to reach them should be documented in a clear and easily understood format.

v) Principle 5 - Good governance and stakeholder involvement

Remediation decisions should be made having regard to the views of stakeholders and following a clear process within which they can participate.

vi) Principle 6 - Sound science

Decisions should be made on the basis of sound science, relevant and accurate data, clearly explained assumptions, uncertainties and professional judgement. This means that decisions are based upon the best available information and are justifiable and reproducible.

4.2 Remediation Stages

4.2.1 The remediation works will be dealt with under separate staged strategies. The staged strategies are as follows;

i) An Enabling Works Remediation Strategy (EWRS), inclusive of the in-built and embedded mitigations through development

ii) A Construction Phase Remediation Strategy (CPRS)

iii) A Residual Contamination Remedial Strategy (RCRS)

iv) A Discovery Strategy (Unidentified Contamination Protocol)

4.2.2 The EWRS to be carried out as part of the proposed Enabling Works of the Site, with the CPRS to be implemented to address the known remaining contamination risks. The proposed RCRS will be subject to additional investigation works and/or monitoring assessing the levels of residual contamination following the successful completion of the EWRS.

4.3 Responsible Parties

4.3.1 The works in each phase will be performed by the Contractor who will be appointed by the Client to perform the work detail described in this document and that required to complete the development.

4.3.2 The works within this document will be overseen by an Independent Geoenvironmental Consultant (IGC), to be appointed by the Client. The IGC will direct works on site as required to perform their duties and/or collect data to support the verification of remediation either directly or by other parties.

4.3.3 The Local Planning Authority, and their consultees, are stakeholders in the project and communication with the LPA should be maintained throughout the progress of the project.

4.4 Remediation Strategies

4.4.1 The following remedial works are to be implemented on-site:

Enabling Works Remediation Strategy (EWRS)

i) Site investigation, comprising a trial pit investigation and a round of groundwater monitoring and sampling, to be performed post demolition. The aim of this investigation is to investigate in previously inaccessible areas and to allow precis of current ground and shallow groundwater conditions, particularly in respect of the potential presence of free phase hydrocarbons on groundwater. This is particularly relevant to the planning of dewatering methods during enabling and construction phases.

ii) Removal of the buried tanks, associated infrastructure and localised hydrocarbon impacted soils, thereby removing the potential source of hydrocarbon contamination that may impact upon groundwater and/or human health via direct contact, ingestion, or inhalation of dusts/vapours.

iii) Excavation and disposal off-site of Made Ground during the construction of the proposed basement and of gross contamination discovered during the enabling works, which can be readily excavated and subsequently disposed of off-site.

Construction Phase Remediation Strategy (CPRS)

iv) Construction of the proposed buildings and hard landscaping to limit/ reduce infiltration through Made Ground remaining beneath Site and to prevent direct contact.

v) Installation of a cover system in areas of proposed soft landscaping where Made Ground will be left *in situ* with separation membrane to prevent mixing of imported clean soils and underlying Made Ground.

vi) Upgrade of the pipework material for any buried potable water supply pipes to the satisfaction of the local water utility provider, Southern Water.

Residual Contamination Remedial Strategy (RCRS)

vii) Monitored natural attenuation (MNA) of contaminant concentrations in groundwater to provide data to support declining source of contamination by natural degradation processes following main remedial strategy implementation. Attenuation could be enhanced by chemical, biological, or physical techniques to further aid the natural attenuation of chemical contamination concentrations.

viii) Should free phase hydrocarbons or highly elevated concentrations of dissolved phase contamination remain following enabling and construction works, in situ remediation and on site containment may be required to be implemented such as extraction of groundwater for above ground treatment prior to discharge.

4.4.2 The specific details of the proposed remediation strategies are provided in Sections 5 to 7 of this report. Principles pertinent to the Site and the proposed development relating to the excavation/removal of soils and/or groundwater and their subsequent treatment, storage, and/or disposal are detailed within Section 8 of this report.

4.5 Unidentified Contamination Protocol

4.5.1 An Unidentified Contamination Protocol will be in place throughout the redevelopment that defines how any unexpected materials (solids, liquids or gases/odours) not previously identified will be managed if encountered during the construction works as presented in **Appendix C**.

4.5.2 The findings of this discovery strategy throughout the Enabling Works of the development, will be used to inform the scope of the RCRS (see Section 7).

4.5.3 Should no unexpected contamination be discovered during the construction/development there will be no requirement to submit any additional information beyond the records of the watching brief and associated inspection notes.

5 Enabling Works Remediation Strategy (EWRS)

5.1 Introduction

5.1.1 This section presents the EWRS for the enabling works phase.

5.1.2 The EWRS will comprise the following remedial works and construction activities to provide mitigation for the known risks to human health and controlled waters:

i) Refurbishment and demolition survey, followed by removal of asbestos and asbestos containing materials (ACMs) by a specialist contractor prior to any demolition works.

ii) Additional ground investigation via excavation of trial pits across the previously unexplored areas of the site (e.g beneath and in proximity to buildings etc) to close out data gaps (as show on **Figure TN01-001** in **Appendix C**) .

iii) Installation of the new steel sheet piled wall along the southern boundary of the Site.

iv) Implementation of the Tank Removal Protocol (section 5.3) for the underground fuel tanks, associated infrastructure, and localised hydrocarbon impacted soils.

v) Excavation of the Made Ground within the footprint of the proposed basement.

vi) Implementation of an Unidentified Contamination Protocol throughout the Enabling Works and subsequent construction to identify any previously unidentified and/or unexpected contamination that may be present on-site.

vii) Adoption of appropriate construction techniques and management practices to reduce risks to neighbouring site users during the works to mitigate potential nuisance or risks such as dust, odours and mobilisation of asbestos fibres. These should be detailed out in the Construction Environmental Management Plan (CEMP)

viii) Adoption of appropriate construction techniques and management practices to reduce potential risks to controlled waters (chalk aquifer and the River Adur).

5.1.3 Detailed methodologies of the protocols to be adopted are given below, with the details of the in-built and embedded mitigation measures provided in reports by others (HOP, 2020b; JT Mackley & Co Limited, 2020; Stantec, 2022; New Ways Construction Limited, 2023; HOP, 2023; Squibb Group, 2023).

5.2 Enabling Works

5.2.1 It is understood that the Enabling Works will comprise:

i) Refurbishment and demolition survey, followed by removal of asbestos and asbestos containing materials (ACMs) by a specialist contractor.

ii) Demolition of on-site structures.

iii) Site investigation works immediately post-demolition.

iv) Breaking out and crushing of concrete slabs and other in-ground concrete structures for subsequent re-use across the Site, subject to verified suitability, with excess material disposed of off-site at licensed facility.

v) Removal of redundant services, sub surface structures, buried fuel tanks and associated fuel lines together with removal of soils impacted by hydrocarbon contamination encountered during the works.

5.2.2 The Enabling Works involve the demolition of existing buildings and removal of in ground obstructions. Additional sources of contamination revealed by the removal of buildings, hardstanding, redundant utilities and services and any other sub-surface structures encountered will be dealt with in accordance with the Unforeseen Contamination Protocol or Tank Removal Protocol (if applicable). In addition, contaminated soil will be removed and stockpiled in a designated area with captured drainage, treatment of resulting waste waters pre discharge and protection of underlying soils prior to off-site disposal. Materials will be required to be covered during periods of storage.

5.2.3 The Contractor will provide a Method Statement describing measures to be implemented to ensure only materials free from asbestos are crushed and operations are undertaken in line with the relevant quality protocols. The crushed material will be stockpiled in the designated area.

5.2.4 The Contractor will ensure appropriate environmental monitoring is undertaken throughout the works to confirm that the works are not adversely impacting controlled waters or off-site receptors comprising:

i) Monitoring of the underlying groundwater on a minimum monthly frequency or as works dictate, comprising inspection for free product and laboratory analysis of metals, TPH and PAH and daily visual inspection of the River Adur. Frequency and scope to be agreed with the regulators and other relevant stakeholders.

ii) Airborne fibre monitoring shall be undertaken at the site perimeter and within discrete working areas.

5.2.5 The environmental and fibre monitoring should be undertaken throughout the enabling works and the environmental monitoring continued during the follow-on construction phase.

5.2.6 Where practicable, the existing monitoring well network shall be protected during the works. Should monitoring wells be required to be removed, they shall be properly decommissioned in accordance with a method statement that shall prepared by the Contractor, submitted to and agreed with the relevant authorities and other pertinent stakeholders. In particular, borehole decommissioning in line with published guidance will require design to prevent the creation of a potential pathway for the contamination of the underlying aquifer (EA, 2012). The installation of replacement or new monitoring wells may be required, subject to the objectives and findings of the environmental monitoring programme and access constraints.

5.3 Tank Removal Protocol

5.3.1 The purpose of this protocol is to ensure that underground fuel tanks and fuel supply pipework are removed in an appropriately controlled manner during site redevelopment and that additional environmental damage does not take place because of their removal.

5.3.2 This protocol does not cover the health and safety and practical considerations required for tank removal, such as cold cutting, vapour monitoring or confined spaces considerations. Guidance on the current good practice to be adopted during the decommissioning of underground tank facilities is contained in APEA guidance (2005) and PETEL 65/3 (Hela Lacots, 1996). The Contractor will provide a Method Statement prior to starting removal. Degassing of the tanks that are not registered as decommissioned and removal of the tanks are to be undertaken by a suitably qualified contractor will be required. Provision of a Naked Flame Certificate will be required to be provided.

Removal - Contractor

5.3.3 The location, construction, size and condition of the tank should be ascertained by the Contractor prior to removal to ensure that sufficient plant and equipment are available on-site and to ensure that there is sufficient space on-site for storage prior to off-site disposal.

5.3.4 A Geoenvironmental Engineer will attend the tank removal process and advise the Contractor on the soils to be excavated. These shall include soils with visual or olfactory evidence of hydrocarbon contamination.

5.3.5 Even if the tanks are identified as redundant or disused the Contractor should not assume that they have been properly decommissioned, unless otherwise certified, and therefore appropriate precautions should be adopted to ensure that damage to the environment due to release of residual fuel/liquid does not take place through their removal.

5.3.6 At the same time as the tank removal, it is necessary to remove any associated fuel lines or off-set fill lines associated with the distribution infrastructure. Appropriate measures will be taken to ensure these fuel lines do not contain any residual fuel that could result in spillage when they are removed.

5.3.7 The removal of sludges, liquids and gases should be undertaken in-situ and in a manner to minimize the potential for spillage during tank emptying.

5.3.8 If any residual fuel, sludge or water from the venting process is present within the tank, this must be fully removed and properly disposed of prior to fully breaking the tank open. The Contractor will undertake investigation works to obtain samples of any liquid or sludge contents and to establish dimensions of the tank.

5.3.9 Should tanks and/ or their contents be required to be stored temporarily on site, this will be in a designated area and be adequately arranged such that the storage will minimize the potential for uncontrolled run-off, creation of leachates and odours. All materials to be removed for off-site disposal should be to an appropriately licensed facility and in accordance with Duty of Care Regulations. Copies of the relevant waste consignment notes are to be provided for inclusion in the Verification Report.

5.3.10 Any concrete or foam used to fill the tanks should also be removed by the breaking open of the tanks and this should be disposed of by a licensed haulier in a controlled manner and under Duty of Care documentation. It is likely that these materials will be contaminated, on-site stockpiling of these materials should be avoided.

5.3.11 Once the fill materials and tanks have been removed the tank cradles should be broken out and removed so that any residual contamination in the resultant excavation can be inspected and assessed.

5.3.12 Where buried tanks are present along the northern boundary (adjacent to Brighton Road), it may be that temporary sheet piles will be required to ensure safe excavation of the tanks and to ensure the stability of adjacent public access areas during removal of the supporting cradle structures. Where there is insufficient space on-site to enable the placement of temporary sheet piles to enable the safe excavation of the tanks and associated infrastructure without compromising the structural integrity of Brighton Road, then structurally critical parts of the tank/infrastructure (cradles) may need to be retained *in situ*. In this case, suitable portals should be broken out of the supporting cradles to allow assessment of the surrounding or underlying soils.

5.3.13 The resultant void will not be infilled without a written instruction from the geoenvironmental consultant. It will be necessary to assess validation analysis results once the data is available from the laboratory (typically five working days from receipt of samples).

5.3.14 The excavation perimeter should be surveyed or measured in to known on-site benchmarks and recorded on a site plan. A photographic record of all excavations will be produced.

Validation Sampling

5.3.15 A description of the tank will be made including, not necessarily limited to; dimensions, condition and surround, along with visual and olfactory observations. A photographic recorded will also be made.

5.3.16 Once the tanks and any associated infrastructure have been removed, the resultant excavation must be validated by soil sampling to determine whether residual contamination is present in the surrounding soils.

5.3.17 Where there is visible free phase hydrocarbon product, soils/water will be excavated/removed and transferred to a prepared, designated and suitably protected area. Where directed by the geoenvironmental consultant, soils will be excavated for off-site disposal.

5.3.18 A Photo Ionisation Detector (PID) will be used, fitted with a 10.6eV lamp to provide immediate assessment of the presence of volatile hydrocarbon contamination.

5.3.19 The excavation base and sides will be sampled. The number of samples to be taken will be dependent on the size of excavation, but typically the sample frequency should be at the rate of one sample per 5m length of excavation face with a minimum of five samples per tank excavation (one at the base and one on each of the excavation faces). Where groundwater is encountered, the base of the excavation will not be extended. Where supporting cradles are required to be retained *in situ* along the northern boundary a small section should be broken out to allow for the sampling of the soils on the opposing side at a spacing of one sample per 2m length of supporting infrastructure left *in situ*.

5.3.20 For fuel lines and pipes, validation sampling will be carried out beneath these lines at the rate of one sample per 5m of pipework or a minimum of two samples per pipe run.

5.3.21 Each sample will be tested for speciated TPH CWG (solid and leachate concentrations) and speciated PAH (USEPA 16 Suite) and be assessed against relevant assessment criteria for a residential development and groundwater environmental quality standards. Where exceedances of these criteria are reported then the resultant excavation will be extended and further validation sampling undertaken. The process will be repeated until such a time when all the validation sample laboratory results are below the established assessment criteria or with agreement with the regulators.

5.3.22 The sample locations shall be recorded, along with the sample depth, a description of the soils taken and a photographic record.

6 Construction Phase Remediation Strategy (CPRS)

6.1 Introduction

6.1.1 Following the completion of the Enabling Works and the successful implementation of the EWRS, the primary sources of contamination that have been identified on-site will have been removed or pathways mitigated. The remaining sources of known contamination will include contaminated Made Ground that present risks to human health, to be mitigated by the implementation of the CPRS.

6.1.2 The CPRS will comprise the following remedial techniques and construction activities to provide embedded and designed mitigations for the known risks to human health:

i) Installation of an engineered cover system where soft landscaping is proposed in areas where Made Ground is to be left *in situ*, with the construction of the proposed buildings and associated hard landscaping to limit infiltration through made ground and remove the potential for direct contact.

ii) Upgrade of the pipework material for any buried potable water supply pipes to the satisfaction of the local water utility provider (Southern Water).

6.1.3 Controls for the protection of neighbouring workers and residents will need to be maintained by the contractor during the construction phase to manage the potential presence of asbestos fibres within made ground beneath the site e.g. dust suppression and works and boundary air monitoring when disturbing made ground.

6.2 Cover Systems

6.2.1 In areas of proposed soft landscaping, not underlain by the basement construction, a cover system shall be implemented to protect end users from exposure to contaminants. In the areas of soft landscaping the cover system should include a minimum of 600mm of clean material indicatively comprising 450mm subsoil and a minimum of 150mm topsoil/ growing medium. A water permeable geotextile barrier should be placed at the base of the cover soil layers to prevent soil mixing. Where raised planters are to be constructed, then the base must be made of a solid material, or the planter should be lined with a geotextile membrane to prevent the mixing of any soils with the underlying Made Ground.

6.2.2 In the areas of proposed soft landscaping underlain by the basement construction or on the proposed roof spaces, it is concluded that that the building fabric will act as a sufficient barrier to protect and human end users. In these areas the soft landscaping should be filled with certified clean material comprising subsoil and topsoil of sufficient thickness to enable the proposed planting strategy and appropriate draining layers beneath.

6.2.3 Where mature trees are proposed as part of the landscaping strategy in areas not underlain by the basement (Allen Pyke Associates, 2022), a greater thickness of subsoil and/or topsoil may be required to ensure sufficient space for growth without damaging the underlying geotextile membrane.

6.2.4 The areas of proposed soft landscaping that fall outside of the footprint of the basement car park are shown on the Composite Landscape Masterplan (**Drawing 2937-LMP-101**), reproduced in **Appendix B**.

6.2.5 The surface water drainage strategy (Stantec, 2022) has been designed to limit the infiltration of any surface water drainage through the Made Ground left *in situ*, with any infiltration through the permeable paving captured within the underlying lined subbase then discharged off-site via

the river wall or the existing surface water network in Brighton Road, as shown on **Drawings 47462/4001/003**, and **47462/4001/004**.

6.3 Water Supply Pipework

6.3.1 The local water utility provider (Southern Water) details within their contaminated land guidance (Southern Water, 2017) that any buried potable water supply pipework must be assessed in accordance with the published UKWIR guidance (2011) and Water UK guidance (2014). Following this guidance barrier pipe material should be used for any buried pipework on account of the recorded hydrocarbon contamination present within both the near surface soils and within the underlying groundwater.

6.3.2 In conjunction with the upgraded pipework material Southern Water require that all joints and bolts are also protected by an approved shrink wrap or a high density bitumen tape (not petroleum based). Detailed guidance on the specification on acceptable pipework materials, joints and bolts, and boundary box construction is provided within Southern Water's Schedule of Permissible Materials (2019) and the Design and Construction Specification (2020).

6.3.3 As endorsed by Southern Water, any service trenches containing potable water pipework should be backfilled with material in accordance with established industry practice and guideline values prescribed by Water UK (1994; 2008) and should not contain asbestos to ensure the protection of future maintenance workers.

7 Residual Contamination Remediation Strategy (RCRS) – Post Enabling Works

7.1 Background

7.1.1 Following the completion of the Enabling Works, the primary sources of contamination that have been identified on-site will have been removed or pathways mitigated, with the remaining known risks being mitigated by the CPRS. As such it is anticipated that the remaining risks will be associated with residual contamination (i.e. impacted groundwater and/or the potential presence of free product) and/or any additional sources of contamination identified through the implemented Unidentified Contamination Protocol.

7.1.2 The exact details of the remedial techniques are subject to the findings of previously unidentified or unexpected contamination that is recorded during the implementation of the Unidentified Contamination Protocol and also to deal with any legacy contamination still present on-site.

Impacted Groundwater

7.1.3 Groundwater has previously been identified as being impacted by metals above the defined assessment criteria. It is anticipated that the implementation of the EWRS and the construction of the site will have a beneficial impact in reducing these concentrations in the medium term via source removal (Made Ground and underground tanks) and removal of surface water infiltration pathways through the made ground.

Free Product / NAPL

7.1.4 No free product was identified during the most recent ground investigation (AFHA, 2021), however the subsequent monitoring of the wells installed in 2005 and 2012 that were still serviceable highlighted only a single monitoring well (WS10) where visual evidence of emulsified NAPL hydrocarbons was present[7]. The oil-water interface probe used to monitor this well did not indicate the presence of a NAPL (light or dense) furthermore no detectable vapour concentrations were recorded in the monitoring well headspace. The chemical analysis undertaken on a sample of this groundwater recorded total TPH concentrations of 45,000µg/l and naphthalene concentrations of 750µg/l.

7.1.5 Based upon the recorded impacted groundwater at WS10 and the potential for free product to be present elsewhere beneath the site (where no ground investigation has been undertaken to date), such as beneath the fuel tanks located on-site, there is a potential for residual contamination to still be present following the completion of the Enabling Works.

7.2 Staged Approach

7.2.1 The following sets out the stages proposed to ensure that the risks posed by any residual contamination are mitigated.

i) Review of any discoveries of unexpected contamination recorded during the Enabling Works.

ii) Review of the groundwater and River Adur monitoring data carried out as part of the Enabling Works.

iii) Post construction groundwater quality monitoring programme.

[7] Water visually recorded as “black in colour with oil globules” (AFHA, 2021)

iv) Further investigation and assessment, subject to the nature and extent of any discovered contamination.

v) Production of a Detailed RCRS and updated Verification Plan, to be approved in writing by Adur District Council and other pertinent stakeholders prior to the implementation of any remedial works.

7.3 Expected Remedial Techniques

7.3.1 Based upon the recorded chemical composition of the Made Ground soils and the groundwater on-site it is anticipated that any residual contamination will likely comprise similar metals and hydrocarbons. Whilst the primary sources of contamination will be removed from Site as part of the EWRS, the other known contamination risks mitigated by the CPRS, and the general soil and groundwater principles implemented as detailed in Section 8, then some residual inorganic and organic contamination may still be present within the groundwater, albeit with a declining source term.

7.3.2 Based upon the Options Appraisal carried out for the Site and the proposed development and the probable declining source term of contamination it is anticipated that the remedial works carried out under the RCRS could comprise a combination of the following remedial techniques:

i) Excavation and disposal of any previously unidentified gross contamination, which can be readily excavated and subsequently disposed of off-site. It is anticipated that any such gross contamination will be identified through the implementation of the Unidentified Contamination Protocol with appropriate mitigations enacted as part of the Enabling Works.

ii) Monitored Natural Attenuation (MNA) of the groundwater beneath the Site

iii) Where MNA is identified to be insufficient to reduce the risks to either the underlying groundwater and/or the adjacent River Adur, then chemical, biological, or physical enhancements should be deployed.

7.3.3 Details regarding MNA and associated potential enhancements, are summarised in the following sections, to be refined following the completion of the EWRS.

7.4 Monitoring of Natural Attenuation (MNA)

7.4.1 Where residual contamination is identified on-site and where the source cannot be removed in its entirety it is likely that further monitoring of the groundwater across the Site will be required to determine whether natural attenuation of the contamination is a viable and acceptable remedial technique.

7.4.2 A programme of groundwater monitoring will be subject to the design of the detailed RCRS and the subsequent approval of the relevant regulatory bodies and stakeholders. The programme will detail the duration and frequency of any proposed monitoring regime, the chemical parameters to be analysed, and the assessment criteria to be adopted to determine the efficacy of the adopted remedial technique. A detailed quantitative hydrogeological risk assessment will be required to determine an acceptable assessment criterion within the underlying groundwater and the River Adur.

7.4.3 If the natural attenuation is considered to be insufficient then it could be enhanced by the addition of chemical, biological, or physical techniques (see Section 7.5).

Indicative Monitoring Regime

7.4.4 The following indicative monitoring regime is proposed for any MNA undertaken. Where possible the existing monitoring well network is to be maintained and serviceable throughout

the Enabling Works. Where an existing well is unable to be maintained it will need to be decommissioned in line with published regulatory guidance (EA, 2012). Additional monitoring wells may be required depending on the findings of contamination under the Unexpected Contamination Protocol and any subsequent pump and treatment of any impacted water/NAPL.

7.4.5 Monitoring should include the following methodology for each monitoring well;

i) Record of groundwater level and standpipe base level (m bgl), record of well head level (m OD).

ii) Presence of, and depth to LNAPL (Light NAPL) or DNAPL (Dense NAPL).

iii) Water is to be purged from each monitoring well at a variable flow rate using low-flow sampling equipment and dedicated tubing. Water quality parameters are to be measured using a flow cell and a multi parameter probe. The water column within the monitoring well should be purged using low-flow sampling techniques and the following parameters recorded. A representative groundwater sample should be taken when the repeat readings have stabilised (as specified):

a) pH (± 0.1 unit) (USEPA, 2017; ASTM, 2018)
b) Temperature (± 3%) (USEPA, 2017; ASTM, 2018)
c) Specific Conductivity (±3%) (USEPA, 2017; ASTM, 2018
d) Dissolved Oxygen Concentration (± 10% for values greater than 0.5mg/L, three repeat readings less than 0.5 mg/L were taken to be stabilised) (USEPA, 2017)
e) Oxidation Reduction (Redox) Potential (± 10 mV) (USEPA, 2017)
f) Depth to water (± 0.10 m) (USEPA, 2017)

iv) Inspection of any water samples and purged water recovered to note any discoloration, turbidity, or olfactory evidence of contamination including commentary on drawdown rates and pumping rate.

7.4.6 The samples of groundwater collected should be scheduled for key determinands including

- metals,
- speciated PAH (USEPA 16),
- speciated TPH CWG,
- MNA parameters (No^{3-}/NO^{2-}, Fe^{3+}/Fe^{2+}, SO_4^{2-}/S^{2-}) and as otherwise dictated by the nature of residual contamination. The limit of detection tested for should be relevant to the assessment criteria concentration.

7.4.7 The MNA monitoring should be carried out at the following frequency:

i) An initial single visit, to include well development (if newly installed), purging, and to record baseline readings

ii) Fortnightly visits during the construction-phase, increasing to weekly during any piling works being undertaken on the Site

iii) Fortnightly visits after completion of the construction works for a minimum of 6 weeks with monthly visits thereafter until levels are shown to remain stable/decreasing to the satisfaction of Adur District Council and other pertinent stakeholders.

7.4.8 If the initial monitoring is unable to establish statistical trends satisfactorily for a baseline, or if anomalous data are generated at specific monitoring points, it may be necessary to increase

the frequency of monitoring visits for specific monitoring points and/or for specific measurements.

7.5 MNA Enhancements

Chemical, biological, or physical enhancements could include air sparging, biosparging, and/or chemical oxidation used in conjunction with a permeable reactive barrier, or a physical hydraulic barrier in the form of a hanging wall/ LNAPL to capture the impacted groundwater to enable additional pump and treatment of the groundwater.

Permeable Reactive Barrier

7.5.1 A permeable reactive barrier will likely be required to impede the lateral movement of any NAPL or dissolved hydrocarbon contamination with the air sparging / biosparging / chemical oxidation carried out as part of the passive treatment process.

Air Sparging

7.5.2 Air sparging involves injecting air into the saturated zone to solubilize (turbulence), biodegrade (aerobic), and volatilize NAPL constituents from the submerged and overlying portions of the NAPL body where airflow occurs. A significant portion of the NAPL depletion accomplished by air sparging is due to enhancement of aerobic biodegradation. Depletion of NAPL in the vadose zone could be further enhanced by soil vapour extraction because it can draw continuous LNAPL from the saturated zone into the vadose zone via capillary processes (wicking) although this is unlikely to be a practical remedial technique for this Site. Furthermore, given the age of any potential NAPL on-site and the proximity to the River Adur, it is probable that any air sparging would just drive any impacted water or residual NAPL off-site and as such would not be an acceptable enhancement technique.

Biosparging

7.5.3 Biosparging utilises similar processes to air sparging, except air/oxygen is injected more slowly with the main goal being stimulation of aerobic biological degradation of NAPL in the saturated and unsaturated zones. Various configurations are possible including inducing airflow into the unsaturated zone by extraction of soil vapours. It should be noted that reliance on biodegradation of NAPL can lead to prolonged remediation timescales that may limit the viability of this enhancement.

Chemical Oxidation

7.5.4 Alternatively, *in situ* chemical oxidation could be utilised where NAPL is depleted by enhanced solubilization and chemical destruction through the addition of a chemical oxidant into the NAPL zone (e.g., hydrogen peroxide and persulphate). Chemical oxidation typically requires the addition of catalysts, stabilizers, and/or activators to control the rates of oxidation. Oxidation reactions with NAPL can be vigorous and require controls for off-gas. Given the brackish nature of the groundwater on-site and the high organic content of the Made Ground soils, it is suspected that chemical oxidation would not be an effective remedial technique, although this should be confirmed once the nature of any residual contamination has been determined. Furthermore the introduction of additional chemicals into the ground is unlikely to be an acceptable technique in the eyes of the EA given the classification of the groundwater as a Principal aquifer and the proximity to the River Adur.

Hydraulic Barrier - Hanging Wall

7.5.5 A hanging wall could be installed in the form of a slurry wall to limit the migration of groundwater laterally into the River Adur. This installation would need to be combined with another enhancement or pump and treatment scheme, otherwise the groundwater would simply circumvent the horizontal extents of the wall.

7.5.6 In general, slurry walls consist of a vertical trench excavated along the perimeter of a site, this trench is then filled with bentonite slurry for support and then backfilled with a mixture of low-permeability material. The three main types of slurry walls are soil-bentonite[8], cement-bentonite[9], and soil-cement-bentonite[10].

7.5.7 The design of the new river wall will need to be taken into consideration when designing a hanging wall to ensure that the structural integrity of either the existing nor the proposed wall is compromised.

Pump and Treat

7.5.8 Pump and treatment involves the retrieval of groundwater and/or NAPL from beneath the Site using one or more extraction wells, trenches, or galleries, and treating the water in an above-ground treatment system prior to discharge. Above-ground treatment of extracted groundwater/NAPL often includes multiple technologies used in a treatment train. Treated groundwater can be reinjected into the subsurface, discharged to the existing surface water drainage system, or discharged to a receiving surface water body either directly or through a storm drain system but only upon approval of the appropriate regulator/stakeholder.

7.5.9 An up-to-date conceptual site model should be developed prior to designing a pump and treat system. Site-specific data including aquifer and contaminant characteristics will be required to design the system components, include:

i) Contaminant type, area, and volume, namely the contaminant plume in three dimensions must be determined prior to designing the system.

ii) Capture zone analysis should be performed to determine appropriate capture zones based on groundwater flow pattern and contaminant distribution, migration pathways, and preferential pathways, as well as applicable regulatory criteria

iii) Locations, quantity, depth, diameter, screen perforation size, filter pack type and grading, construction materials, and material compatibility with the site contaminants for any vertical wells, horizontal wells, recovery trenches or galleries installed. It is probable that the existing monitoring well network will be insufficient and new wells will be required.

iv) Determination of appropriate treatment technologies in use (e.g., electrical resistance, heating).

v) Number and types of extraction pumps, either submersible or above-ground.

vi) Treatment train components, for example, air strippers and/or granular activated carbon (GAC) filters, and design of piping, instrumentation, and control systems, including programmable logic controller for system operation.

vii) Treatment system compound, for example, building or trailer that houses system equipment and associated structural, mechanical, and electrical components.

viii) Location and permitting of a point of discharge for treated water. The selected point of discharge is a primary factor for establishing regulatory or other treatment criteria for the system.

[8] A mixture of bentonite slurry with the excavated soil. Additional dry bentonite might be added to the mixture in order to meet design requirements and that specialty additives can been added to the backfill in order to increase the sorption capacity.

[9] Bentonite and cement are mixed together as powder prior to the addition of water and injection into the ground.

[10] A combination of bentonite slurry, soil, and cement.

ix) A monitoring well network to verify system performance against the goals of containment and/or contaminant mass reduction. It is probable that some of the existing monitoring well network could be utilised, assuming that they have been retained as serviceable throughout the Enabling Works. Additional monitoring wells may be required subject to the location and extent of the NAPL.

x) Treatment system influent, intermediate, and effluent sampling points to assess system efficiency and compliance with applicable discharge permit requirements.

7.5.10 Given the space constraints of the Site, it is probable that any pump and treat system would entail a high vacuum extraction system to extract and remove the NAPL via the gas-phase, to control capillary forces immobilised by the NAPL, and to extract as much NAPL and vapour-phase contamination as possible.

8 Soil and Groundwater Management Principles

8.1 Dewatering of Excavations

8.1.1 If dewatering is required, abstraction and discharge licences if applicable will be sought from the EA under the terms of the Environmental Permitting Regulations 2010.

8.1.2 Discharge to sewer may be possible subject to the approval of Southern Water. It should be noted that if free product is present then treatment such as separation prior to discharge to sewer will be necessary. Alternatively, it might be necessary to contain all arisings and tanker the liquid(s) for off-Site disposal following the requirements of the European Waste Directive.

8.2 Soil Management

8.2.1 The principles set out here will be applied to detailed materials and soils management plans and Contractor Method Statements which will be developed as the design progresses.

8.2.2 Contamination testing undertaken on the Made Ground has recorded elevated chemical concentrations in respect to a residential scenario as well as loose asbestos fibres and ACMs. Therefore, without further testing and analysis this material is not considered to be suitable for use and should be disposed of once excavated. Temporary stockpiling of the Made Ground may be acceptable, though control measures will be required (e.g. covering with a membrane) to prevent the cross contamination of asbestos by aeolian deposition.

8.2.3 The Contractor will provide Method Statements for approval by the relevant authorities and stakeholders and work accordingly, establishing a designated area for stockpiling of materials. Arisings should be stockpiled and identified. This should include a ‘quarantine’ area to be established for handling potentially contaminated soils that are encountered to allow for isolation pending assessment to determine their status as a waste, appropriate remediation (where required), and/or acceptance of re- use requirements (if appropriate).

8.2.4 The quarantine storage area will be contained to ensure that contamination, if present, does not migrate and affect other areas of the site. The location of the stockpile area shall be set away from surface water drains and provide containment to ensure that any potentially contaminated run-off or sediments do not migrate and affect other areas of the Site. To minimise impacts from the stockpiles, the storage area will include an appropriate separator layer or a membrane at the base of the stockpile and a suitable cover over each stockpile. An interceptor may be required to remove sediment and hydrocarbons from site derived surface water prior to discharge.

8.2.5 Separate stockpiles are envisaged for the following:

i) Oversize concrete and other hardcore (awaiting crushing).

ii) Crushed concrete and hardcore

iii) Buried tanks and associated infrastructure (fuel lines, etc.)

iv) Material used to fill the buried tanks during any pervious decommissioning works (foam, concrete, etc.)

v) Hydrocarbon impacted soils associated with the buried tank removal

vi) Made Ground pending off-site disposal (separate stockpiles for differing sources/ waste streams)

vii) Naturally occurring soils pending reuse or off-site disposal (subject to suitability)

viii) Potentially contaminated soil (pending testing).

8.2.6 All stockpiles and material storage areas will need to consider protection of the environment to minimise and mitigate potential impacts that may arise including captured drainage and covering of waste materials.

8.2.7 A sealed disposal unit will be required on-site for any ACMs encountered during the enabling works that has not already been removed from Site following the R&D Survey and/or any bulk ACMs encountered within the soil waste streams.

Identification of Asbestos Containing Materials (ACMs)

8.2.8 If suspected ACMs are encountered, then these must be segregated from the remaining materials.

8.2.9 If the material is proposed for off-site disposal, the fragments require separate assessment. If the fragments contain 0.1 % or greater of asbestos, then the materials will be classified as hazardous waste. Note that WM3 v1.2 (EA, 2021) states that if: "*the waste contains, in addition to any dispersed fibres, any asbestos in identifiable pieces they must be assessed as set out below. This would also apply to any dispersed fibres produced by deliberately breaking up such identifiable pieces. Where the waste contains identifiable pieces of asbestos (i.e. any particle of a size that can be identified as potentially being asbestos by a competent person if examined by the naked eye), then the asbestos must be assessed separately. The waste is hazardous if the concentration of asbestos in the pieces alone is 0.1%*"

If soils containing visually identifiable ACMs are proposed for reuse on Site, subject to confirmation of acceptability from the regulators, they will require the following remediation works to be implemented.

i) Screening to remove visible ACMs. ACMs to be suitably handled, stored and disposed off-site. Materials free of visible ACMs, can be reused anywhere on the site subject to testing of their free fibre content.

ii) Covering with a marker/break layer and placed below buildings or hardstanding with a clean cover system of placed material demonstrably free from contamination of 600mm thickness.

8.2.10 Certainty of use must be determined prior to the excavation of said soils, otherwise they must be classified as a waste material and handled accordingly under the European Waste Directive and detailed in the EA guidance on waste management (EA, 2021).

8.2.11 If the soils are not able to be deemed as suitable for reuse within the development, which is unlikely, then they must be disposed of off-site to a licensed facility.

8.2.12 The above approach should be confirmed as acceptable with the appropriate regulators prior to commencement of the works and subsequently included within the appropriate Contractor's Method Statements.

8.3 Soil Excavation and Disposal Protocol

8.3.1 The Contractor will prepare a procedure for identifying where waste will be generated, any additional testing to confirm the classification and measures to be adopted to address the requirements of the European Waste Directive that all waste needs to be pre-treated prior to disposal.

8.3.2 If material is proposed to be reused on-Site as part of the construction, the material will require appropriate classification and / or sorting to demonstrate suitability. The actual material to be excavated should be analysed and assessed as suitable for reuse by assessing potential risk to human and controlled water receptors. There should also be a clear requirement for reuse in the scheme design and may require consideration as part of a materials management plan or U1 exemption. It is the Contractor's responsibility to appropriately classify material excavated and ensure adequate testing is completed.

8.3.3 Off-Site disposal requires an accurate written description of the waste and must include:

i) The waste classification code, also referred to as LoW (List of Waste) or EWC (European Waste Catalogue) code - classification codes for common types of waste are in the relevant parts of this guidance.

ii) Whether it's hazardous or Persistent organic pollutant (POPs) waste.

iii) The type of premises or business where the waste was produced.

iv) The name of the substance or substances.

v) The process that produced the waste.

vi) A chemical and physical analysis of the waste and its components.

vii) Any special problems, requirements or knowledge related to the waste.

8.3.4 For controlled waste that is classified as 'non-hazardous' this will be a waste transfer note and for waste classified as 'hazardous' this will be a consignment note. In both cases the record will require a waste code and classification.

8.4 Imported Materials Criteria

8.4.1 If primary aggregates from a certified source, or materials produced under a Waste and Resources Action Programme (WRAP) protocol (including certification) are imported onto the site, they will not require on-site sampling and chemical testing for conformance providing the appropriate certificates are provided.

8.4.2 Recycled aggregates should be supplied with a testing certificate confirming they are suitable for use and free from contamination (including asbestos) and visually inspected on arrival at site for conformance.

8.4.3 Imported soils for the use in soft landscaping should be suitable for their intended purpose and demonstrated to be free of contamination. Imported materials shall not contain asbestos.

8.4.4 A typical standard testing frequency for soils proposed for importation to a site is minimum 1 test per 250m^3 for imported soils (with a minimum of three samples per source in the event of small sources of material). All environmental chemical testing and should be carried out by an UKAS accredited laboratory.

8.4.5 This typical sampling frequency will be adhered to unless material is particularly heterogenous or of higher risk (therefore requiring more detailed sampling) or particularly homogenous / lower risk (therefore requiring less detailed sampling).

8.4.6 Suggested Material Import Criteria are presented in **Appendix D.**

9 Verification Plan

9.1.1 The Verification Report will document the source of materials and where the materials are moved to, any changes that have been made and contingency arrangements implemented such as when encountering unexpected contamination, and the approval of the applied mitigation and its validation. The following items will be included in the Verification Report, although this is not an exhaustive list and constitutes the basic quality control procedures. It is anticipated that a Verification Report will be completed for each of the identified remediation strategies (EWRS, CPRS and RCRS) each with separate specific reporting requirements subject to the type of remedial works undertaken.

i) Description of the works completed.

ii) Manufacturer's/ supplier's product documentation (e.g. compliance certificates and delivery notes).

iii) Contractor's documentation (e.g. training and maintaining awareness programme, method statements, plant data sheets *etc*).

iv) Contractor's records including the results of any environmental monitoring and airborne fibre monitoring.

v) Engineer's Site Diary logs, including the Geoenvironmental Engineer's records during the implementation of the watching brief and the Tank Removal Protocol.

vi) Records of all imported topsoil, subsoil and soil conditioning material for the Site, inclusive of laboratory test certificates and sampling data demonstrating that the material is suitable for use.

vii) Records of all soils removed from site including landfill receipts and/or waste transfer notes.

viii) Photographic records;

ix) As-built drawings including surveys of the finished ground level of the construction platform; location and numbering system of samples taken for laboratory testing; appropriate site plans showing extent of any excavations and where site won soils have been placed (if any).

x) Any additional site investigation data and risk assessments, and the finalised residual contamination remedial strategy along with any resultant communications with the appropriate regulatory bodies and stakeholders.

xi) Record of quantity of materials imported (to be provided by the Contractor).

xii) Details of any unexpected contamination encountered and how it was dealt with including agreement from the pertinent regulatory bodies and other relevant stakeholders (as appropriate).

xiii) Copies of documentation from Southern Water confirming that the materials used in the water supply pipes and associated fittings are acceptable including as built drawings and supplier records.

xiv) Detailed records of the monitoring undertaken as part of the MNA and any subsequent design of enhancements.

References

A F Howland Associates Limited (AFHA) (2021) A Report on a Ground Investigation at Frost Cars, Shoreham-by-Sea, West Sussex, BN43 6RE. Report reference JHA/TJS/20.325, dated 12 March 2021.

Allen Pyke Associates (2022) Landscape Strategy. Report reference 2937-RE-101, dated December 2022.

American Society of Testing Materials (ASTM) (2018) ASTM D6771-18. Standard Practice for Low-Flow Purging and Sampling for Wells and Devices Used for Ground-Water Quality Investigations. ASTM International.

Ashdown Site investigation Limited (ASI) (2005) Frosts Cars Ltd Combined Factual and Interpretative Report. Report reference LW16257, dated November 2005.

Association for Petroleum & Explosives Administration (APEA) (2005) Design, Construction, Modification, Modification and Decommissioning of Filling Stations, 2nd Edition, 2005, Published jointly by the APEA and the Energy Institute.

Environment Agency (EA) (2012) Good Practice for Decommissioning Redundant Boreholes and Wells. Published October 2012.

Environment Agency (EA) (2021) Environment Agency (EA) (2021b) WM3 v1.2.GB - Waste Classification - 1st Edition.

Environment Agency (EA) (2023) Land contamination risk management. Published 8 October 2020, last updated 20 July 2023. https://www.gov.uk/government/publications/land-contamination-risk-management-lcrm [accessed 8 September 2023]

GeoDyne Geotechnical and Environmental Consultants (GDGEC) (2012a). Brighton Road Shoreham - Combined Phase I Desk Study and Initial Phase II Ground Investigation Report. Report reference 31149, dated 28 September 2012.

GeoDyne Geotechnical and Environmental Consultants (GDGEC) (2012b). Brighton Road Shoreham - Final Ground Gas Assessment Report. Report reference 31149/CJP, dated 15 October 2012.

Hela Lacots (1996) PETEL 65/3 Redundant Underground Petrol Tanks Removal and Conveyance of Tanks from Licensed Petroleum Premises.

HOP Consulting Limited (HOP) (2020a) Technical Appraisal – Urgent River Wall Repair Works. Report reference 15686/01/HOP/RPT/01, dated 27 January 2020.

HOP Consulting Limited (HOP) (2020b) Piling Risk Assessment. Report reference 15686/01/HOP/RPT/02, dated 24 June 2020.

HOP Consulting Limited (HOP) (2023) Response to Planning Condition 4(v) & 4 (vi). Report reference 15686-HOP-00-XX-RP-S-5000, dated 11 August 2023.

JT Mackley & Co Limited (2020) Construction & Environmental Management Plan. Report reference JTM-FORM-HS-FM006 [Revision O], dated 25 June 2020.

Ministry of Housing, Communities & Local Government (MHCLG) (2021) National Planning Policy Framework. Ministry of Housing, Communities and Local Government, London.

New Ways Construction Limited (2023) Construction Management Plan. Dated July 2023.

Soil Engineering Limited (SEL) (1980) Site Investigation Report. Report reference 2097, dated February 1980.

Southern Water (2019) Schedule of Permissible Materials. March 2019.

Southern Water (2020) Design and Construction Specification for Southern Water Services Limited. May 2020 Version 1.1.

Squibb Group (2023) Demolition Risk Assessment and Method Statement. Report reference SG7931, dated 14 August 2023.

Stantec UK Limited (Stantec) (2020a) Phase 1 Ground Conditions Assessment. Report reference 47462/3501/GCA/R01, dated 17November 2022.

Stantec UK Limited (Stantec) (2020b) Sea Wall and Flood Level Appraisal. Report reference 47462/TN001, dated 18 March 2020.

Stantec UK Limited (Stantec) (2021) Phase 3 Ground Investigation Report. Report reference 47462/3502/GIR/Rev00, dated 31 March 2021.

Stantec UK Limited (Stantec) (2022) Flood Risk and Drainage Strategy. Report reference 332510124/4001 Revision D, dated 16 December 2022.

United Kingdom Water Industry Research (UKWIR) (2011) Guidance for the selection of Water Pipes to be used in Brownfield Sites.

United States Environmental Protection Agency (USEPA) (2017) EQASOP-GW4. Low Stress (Low-Flow) Purging and Sampling Procedure for the Collection of Groundwater Samples from Monitoring Wells. United States Environmental Protection Agency. North Chelmsford, MA, USA.

Water UK (1994) WIS 4-08-02 Specification for Bedding and Sidefill Materials for Buried Pipelines. February 1994.

Water UK (2008) WIS 4-08-02A Amendment to: Specification for Bedding and Sidefill Materials for Buried Pipelines. November 2008.

Water UK (2014) Contaminated Land Assessment Guidance.

Essential Guidance for Report Readers

This report has been prepared within an agreed timeframe and to an agreed budget that will necessarily apply some constraints on its content and usage. The remarks below are presented to assist the reader in understanding the context of this report and any general limitations or constraints.

If there are any specific limitations and constraints, they are described in the report text. The opinions and recommendations expressed in this report are based on statute, guidance, and best practice current at the time of its publication. Stantec UK (Stantec) does not accept any liability whatsoever for the consequences of any future legislative changes or the release of subsequent guidance documentation, etc. Such changes may render some of the opinions and advice in this report inappropriate or incorrect and the report should be returned to us and reassessed if required for re-use after one year from date of publication. Following delivery of the report Stantec has no obligation to advise the Client or any other party of such changes or their repercussions.

Some of the conclusions in this report may be based on third party data. No guarantee can be given for the accuracy or completeness of any of the third party data used. Historical maps and aerial photographs provide a “snap shot” in time about conditions or activities at the site and cannot be relied upon as indicators of any events or activities that may have taken place at other times.

The conclusions and recommendations made in this report and the opinions expressed are based on the information reviewed and/or the ground conditions encountered in exploratory holes and the results of any field or laboratory testing undertaken. There may be ground conditions at the site that have not been disclosed by the information reviewed or by the investigative work undertaken. Such undisclosed conditions cannot be taken into account in any analysis and reporting.

This report has been written for the sole use of the Client stated at the front of the report in relation to a specific development or scheme. The conclusions and recommendations presented herein are only relevant to the scheme or the phase of project under consideration.

This report shall not be relied upon or transferred to any other party without the express written authorisation of Stantec. Any such party relies upon the report at its own risk.

The interpretation carried out in this report is based on scientific and engineering appraisal carried out by suitably experienced and qualified technical consultants based on the scope of our engagement. We have not taken into account the perceptions of, for example, banks, insurers, other funders, laypeople, etc., unless the report has been prepared specifically for that purpose. Advice from other specialists may be required such as the legal, planning and architecture professions, whether specifically recommended in our report or not.

Public or legal consultations or enquiries, or consultation with any Regulatory Bodies (such as the Environment Agency, Natural England or Local Authority) have taken place only as part of this work where specifically stated.

Appendix A Regulatory Correspondence

Adur & Worthing Councils
Development Control
Portland House
Richmond Road
Worthing
West Sussex
BN11 1LF

Our ref: HA/2018/120794/01-L01
Your ref: AWDM/1497/17

Date: 31 October 2018

Dear Sir or Madam,

(DISCHARGE OF CONDITIONS 3) REDEVELOPMENT OF THE SITE TO PROVIDE TEN BUILDINGS, CONTAINING 540 NEW HOMES (OF WHICH TWO WILL BE STUDIOS, 179 X ONE BED, 323 X TWO BED AND 38 X THREE BED), 2,707SQM OF COMMERCIAL FLOORSPACE AT GROUND FLOOR LEVEL WITHIN USE CLASSES, A1 (RETAIL), A3 (CAFES AND RESTAURANTS), B1 (BUSINESS) AND D1 (NON-RESIDENTIAL INSTITUTIONS). THE DEVELOPMENT ALSO INCLUDES 512 PARKING SPACES, OF WHICH 438 WILL BE FOR RESIDENTS AND 74 WILL BE FOR THE COMMERCIAL SPACE/VISITORS, RECONSTRUCTION OF THE RIVER WALL, CONSTRUCTION OF MOORING PONTOONS AND OBSERVATION PLATFORM AT THE END OF HUMPHREY'S GAP, PROVISION OF A RIVERSIDE PEDESTRIAN/CYCLE ROUTE, AREAS OF SEMI-PRIVATE AND PUBLICLY ACCESSIBLE OPEN SPACE, INTERNAL ACCESS ROADS, 596 CYCLE PARKING SPACES AND ASSOCIATED ANCILLARY AREAS. THE APPLICATION IS A DEPARTURE FROM THE DEVELOPMENT PLAN. THE APPLICATION IS ACCOMPANIED BY AN ENVIRONMENTAL STATEMENT.

63 BRIGHTON ROAD, SHOREHAM-BY-SEA, WEST SUSSEX, BN43 6RE.

Thank you for consulting the Environment Agency on the above application.

We have reviewed the information as submitted and set out our position and comments below.

Environment Agency Position

We **do not** recommend the discharge of Condition 3.

Reasons

The information submitted in relation to the application with regard to the excavation and remediation of possible contamination (including watching brief), and re-profiling of ground levels and piling are acceptable in relation to these enabling works.

We are also content to allow push/vibro piling to commence. However, we need further information regarding the following:

- Whether any impact/hammer piling is to be used, and if so information about this how this will be avoided wherever possible, and regarding any soft start techniques used to disperse any fish that may be present.

- Information about how impacts to fish will be minimised, in particular migratory Salmonids - Sea Trout, which will be migrating up the river from November to January.

- Information about when piling is to be carried out i.e. to be carried out when mudflats are not exposed in order to avoid impacts to birds and also to avoid impacts to fish that may be passing through.

If the above information is submitted and considered as satisfactory, we can recommend discharge of this condition.

Please do not hesitate to contact me using the contact details shown below should you have any queries regarding the above information.

Yours faithfully,

Mrs Sophie Brown
Sustainable Places Advisor

Direct dial: 02030 257250
Email: planningSSD@environment-agency.gov.uk

End

creating a better place

Environment Agency

Mr Cian Cronin
Adur & Worthing Councils
Development Control
Portland House
Richmond Road
Worthing
West Sussex
BN11 1LF

Our ref: HA/2017/119846/01-L01
Your ref: AWDM/1497/17

Date: 12 January 2018

Dear Mr Cronin

Redevelopment of site for erection of ten buildings providing 540 residential units; 2,707m^2 of commercial floorspace; access and parking; reconstruction of river wall and provision of observation platform and riverside walk/ cycleway; open space; and associated works

Free Wharf, Shoreham-by-Sea, West Sussex

Thank you for consulting the Environment Agency on further information submitted in support of the above planning application.

In our previous response we objected because we considered the development would result in an unacceptable impact on the intertidal habitat of the Adur, and were not confident that the layout was compatible with environmental permitting requirements for development near flood defences.

The applicant has since submitted further clarification on the impacts of the development on the intertidal habitat, and how maintenance of defences will be managed. We have reviewed this additional information and have the following comments.

Environment Agency Position

We would be able to remove our objection to the development, **subject to the inclusion of the below conditions** and **subject to agreement of a reasonable planning obligation** towards the improvement of intertidal habitat elsewhere in the Adur.

We maintain our position that the development as proposed would result in an unacceptable impact on biodiversity and nature conservation, and if these impacts cannot be avoided they require further mitigation or compensation to make them acceptable in planning terms.

We recognize the challenge identified by the applicant in directly compensating for intertidal habitat in the Adur Estuary.

We are now satisfied that adequate information has been submitted to demonstrate that the requirements of an Environmental Permit for Flood Risk Activity could be met. Please see below for further information.

Biodiversity
The clarification on biodiversity impacts provided by the applicant indicates that approximately 40m^2 of mudflat will be directly lost as a result of the development, and 470m^2 will be overshadowed (albeit mitigated by the design of the structures).

We are pleased to see that the development includes the creation of habitat via the terraces underneath the walkway. However, we reiterate our previous concerns that this will not provide like for like habitat.

The Adur Estuary, together with Rye Harbour, represent the only significant areas of intertidal habitat between Pagham Harbour to the west and Sandwich Bay to the east, making the estuary a very important site in terms of its local ecological value.

The intertidal foreshore provides a sensitive, unique and ecologically rich habitat that supports an abundance of invertebrates and associated wading and wintering wildfowl. Mudflats are a priority habitat in the Government's UK Biodiversity Action Plan (BAP), and highlighted as under threat in the Sussex local BAP. One of the main objectives is to maintain at least its present extent and regional distribution.

Policy 8 ‘Shoreham Harbour Regeneration Area’ of the Adur Local Plan (adopted December 2017) states that ‘all development will be required to protect and enhance the area’s important environmental assets and wildlife habitats’. It goes on to state that redevelopment of sites in the Western Harbour Arm will need to enhance the area’s natural biodiversity.

Paragraph 118 of the National Planning Policy Framework (NPPF) states that if significant harm resulting from a development cannot be avoided, adequately mitigated, or, as a last resort, compensated for, then planning permission should be refused.

This is also supported by Policy 32 ‘Biodiversity’ of the Adur Local Plan, and Policy SH7 ‘Natural Environment, *etc*’ of the Proposed Submission Shoreham Harbour Joint Area Action Plan (JAAP).

Whilst there is benefit in providing tidal terraces as additional intertidal habitat, we are not satisfied that it completely mitigates for the loss created by the development, nor provides like for like compensation in terms of habitat quality and accessibility to fauna.

The net loss and degradation of intertidal habitat would therefore result in significant adverse impacts on one of the area’s most important environmental assets. The development would therefore result in an unacceptable impact on biodiversity and make the proposals contrary to the development plan and the NPPF.

Cont/d..

Planning obligation
In light of the difficulties found by the developer in providing direct like for like compensation, a planning obligation to fund improvement to the Adur estuary environment could be agreeable and ensure the development is in accordance with the above referenced development plan policies to protect and improve the natural environment, and mitigation hierarchy at paragraph 118 the NPPF.

If secured via a section 106 agreement, it would need to be clear that the improvement directly relates to the improvement of intertidal habitat in the Adur. We are exploring options with partners for the identification of enhancement opportunities, and such funds could contribute to their implementation.

Such a contribution would be consistent with the PPG as it would serve as mitigation for the otherwise unacceptable impact on intertidal habitat. It would therefore make the development acceptable in planning terms, and satisfy the first test of regulation 122 of the Community Infrastructure Levy Regulations 2010 (the 'CIL regs').

The detail of a section 106 agreement would need to include a reasonable and adequate sum, and wording that secures improvement to the Adur estuary's intertidal habitat, to ensure it complies with the second and third tests of regulation 122 of the CIL regs.

We would welcome discussion on the detail of any agreement.

The applicant can otherwise overcome our objection on biodiversity grounds by submitting development proposals that will not result in a net loss and detrimental impact on the intertidal habitat, and ideally that the development is enhancing the environmental asset of the Adur estuary's mudflats as required by the adopted Adur Local Plan and emerging Shoreham Harbour JAAP.

The applicant has stated that they have exhausted investigating the opportunities to directly compensate for the loss of intertidal.

If the prospect of a planning contribution is not considered to be appropriate by the local authority or applicant, then we recommend that further consideration is given to how the impacts could otherwise be avoided, mitigated or compensated for.

Planning conditions

If the outstanding issue of impacts on biodiversity can be addressed, we recommend the following conditions on any planning permission.

Without the inclusion of these conditions, we would consider the development to have unacceptable impacts on biodiversity and pose unacceptable risks to flooding and groundwater quality, and therefore be inconsistent with the development plan.

Condition 1 – Flood risk mitigation
The development permitted by this planning permission shall only be carried out in accordance with the approved Flood Risk Assessment (FRA) (HOP ref 14576/HOP/RPT/01, dated September 2017) and the following mitigation measures detailed within the FRA:

- Finished floor levels for habitable rooms are set no lower than 7.3 metres above

Ordnance Datum (AOD); and
- Finished floor levels for commercial units are set no lower than 5.6 metres above Ordnance Datum (AOD).

The mitigation measures shall be fully implemented prior to occupation and subsequently in accordance with the timing / phasing arrangements embodied within the scheme, or within any other period as may subsequently be agreed, in writing, by the local planning authority.

Reasons
The site is located within tidal Flood Zone 3 of our Flood Map. This indicates land with a high probability (1 in 200 year) of tidal flooding, in accordance with the national Planning Practice Guidance (PPG) (ref. 7-065-20140306).

Policy 36 ('Flood Risk and Sustainable Drainage') of the Adur Local Plan and paragraphs 100 and 102 (part two of the Exceptions Test) of the National Planning Policy Framework (NPPF), require that in order for the development to be acceptable it should be made safe without increasing flood risk elsewhere.

The PPG states that development can be made safe by (amongst other things), designing buildings to avoid flooding by raising floor levels (ref. 7-054-20150415). The emerging Shoreham Harbour JAAP provides guidance on what finished floor levels are expected for residential and commercial development for this site.

The proposed floor levels in the application comply with these requirements and will ensure adequate protection for people and property from flooding, in accordance with national and local planning policy.

Condition 2 – Construction Environment Management Plan
No development shall take place until a construction environmental management plan (CEMP) that is in accordance with the approach outlined in the Environmental Statement, has been submitted to and approved in writing by the local planning authority. This shall deal with the treatment of any environmentally sensitive areas, their aftercare and maintenance as well as a plan detailing the works to be carried out showing how the environment will be protected during the works. The CEMP shall include details of the following:

- Construction methods
- The timing of the works
- Timing and method of piling works
- The measures to be used during the development in order to minimise environmental impact of the works (considering both potential disturbance and pollution)
- A map or plan showing habitat areas to be specifically protected (identified in the ecological report) during the works.
- Any necessary pollution protection methods

The works shall be carried out in accordance with the approved method statement.

Reasons
The construction of the development will involve works near and within the sensitive habitat of the Adur. If appropriate safeguards/ mitigation measures are not implemented in undertaking these works, they pose a risk of detrimental impacts on the habitats and species in this environment.

This condition is necessary to ensure the protection of wildlife and supporting habitat and secure opportunities for the enhancement of the nature conservation value of the site in line with policy 32 of the Adur Local Plan, policy SH7 of the Proposed Submission Shoreham Harbour JAAP, and paragraphs 109 and 118 of the NPPF.

Condition 3 – Intertidal terrace details
No development below mean high water springs shall take place until details for the design of the intertidal terraces have been submitted to and agreed in writing by the local planning authority. Thereafter the development shall be implemented in accordance with the approved scheme.

Reasons
The provision of the intertidal terraces beneath the walkway are a significant element of the ecological mitigation proposed for the development.

Details of their final design and how this has been maximised for ecological benefit will therefore be required prior to implementation.

This condition is necessary to ensure the protection of wildlife and supporting habitat and secure opportunities for the enhancement of the nature conservation value of the site in line with policy 32 of the Adur Local Plan, policy SH7 of the Proposed Submission Shoreham Harbour JAAP, and paragraphs 109 and 118 of the NPPF.

Condition 4 – Site investigation and remediation
No development approved by this planning permission shall take place until a remediation strategy that includes the following components to deal with the risks associated with contamination of the site shall each be submitted to and approved, in writing, by the local planning authority:

1. A preliminary risk assessment which has identified:
    - all previous uses
    - potential contaminants associated with those uses
    - a conceptual model of the site indicating sources, pathways and receptors
    - potentially unacceptable risks arising from contamination at the site.

2. A site investigation scheme, based on (1) to provide information for a detailed assessment of the risk to all receptors that may be affected, including those off site.

3. The results of the site investigation and the detailed risk assessment referred to in (2) and, based on these, an options appraisal and remediation strategy giving full details of the remediation measures required and how they are to be undertaken.

4. A verification plan providing details of the data that will be collected in order to demonstrate that the works set out in the remediation strategy in (3) are complete and identifying any requirements for longer-term monitoring of pollutant linkages, maintenance and arrangements for contingency action.

Any changes to these components require the express written consent of the local planning authority. The scheme shall be implemented as approved.

Condition 5 – Verification report
No occupation of any part of the permitted development shall take place until a

verification report demonstrating completion of works set out in the approved remediation strategy and the effectiveness of the remediation shall be submitted to and approved, in writing, by the local planning authority.

The report shall include results of sampling and monitoring carried out in accordance with the approved verification plan to demonstrate that the site remediation criteria have been met.

Condition 6 – Long term monitoring and maintenance
No development should take place until a long-term monitoring and maintenance plan in respect of contamination including a timetable of monitoring and submission of reports to the Local Planning Authority, shall be submitted to and approved in writing by the Local Planning Authority. Reports as specified in the approved plan, including details of any necessary contingency action arising from the monitoring, shall be submitted to and approved in writing by the Local Planning Authority. Any necessary contingency measures shall be carried out in accordance with the details in the approved reports.

On completion of the monitoring specified in the plan a final report demonstrating that all long-term remediation works have been carried out and confirming that remedial targets have been achieved shall be submitted to and approved in writing by the Local Planning Authority.

Condition 7 – Unsuspected contamination
If, during development, contamination not previously identified is found to be present at the site then no further development (unless otherwise agreed in writing with the local planning authority) shall be carried out until the developer has submitted a remediation strategy to the local planning authority detailing how this unsuspected contamination shall be dealt with and obtained written approval from the local planning authority. The remediation strategy shall be implemented as approved.

Condition 8 - Piling
Piling or any other foundation designs using penetrative methods shall not be permitted other than with the express written consent of the local planning authority, which may be given for those parts of the site where it has been demonstrated that there is no resultant unacceptable risk to groundwater. The development shall be carried out in accordance with the approved details.

Reasons for contaminated land conditions
The site lies above Tarrant Chalk Member which is designated a Principal Aquifer. This designation indicates aquifers that provide significant quantities of water for people and may also sustain rivers, lakes and wetlands.

We have reviewed the Phase I and II land contamination reports (Environmental Statement Volume 4: Technical Appendices part 2.3) produced by Geodyne. The investigations have identified previous historical uses on site that have the potential to cause soil and groundwater pollution.

Policy 34 ‘Pollution and contamination’ of the Adur Local Plan requires that development does not result in pollution of the water environment. Policy 34 requires that adequate investigation and assessment, and if required mitigation, will be needed to ensure that unacceptable pollution does not take place.

This is also supported by paragraphs 109 and 121 of the NPPF.

The site investigation included a limited number of exploratory holes, and soil samples were sampled and analysed. Heavy metals and hydrocarbons were identified across the site. Investigations were limited at the time as access was not gained in all areas.

The report has made some initial remediation proposals relating to the limited information obtained during the investigations. The report also states that groundwater is unlikely to impacted.

We recommend that additional investigations are carried out including groundwater sampling and testing including risk assessment to identify whether water resources are at potential risk and the development of soil and groundwater remediation if applicable. In addition to this, the proposed piling scheme has the potential to create pathways and drive contamination down in to groundwater if these areas are not adequately assessed or remediated.

Therefore the above conditions are required for any planning permission in order to ensure that the risks to groundwater quality from the proposed development are adequately understood, and that any remediation required is carried out and verified.

Flood warning and evacuation – Advice to local planning authority
In all circumstances where warning and emergency response is fundamental to managing flood risk, we advise LPAs to formally consider the emergency planning and rescue implications of new development in making their decisions.

The PPG states that LPAs should consult their emergency planning staff to ensure evacuation plans are suitable through appropriate planning conditions (Ref. 7-054-20150415).

We therefore recommend seeking comments from the relevant emergency planners.

Please note that it is not our role to assess the detail of flood evacuation or emergency plans. We do not carry out these roles during a flood. Our involvement with this development during an emergency will be limited to delivering flood warnings to occupants/ users covered by our flood warning network.

Environmental Permit for Flood Risk Activity – Advice to developer
We are satisfied that the information now submitted by the applicant demonstrates that the site can provide adequate access for maintenance, and we remove our objection on this issue.

The development will still require an Environmental Permit for Flood Risk Activity (FRAP) from us under the Environmental Permitting Regulations for any temporary or permanent proposed works or structures, in, under, over or within 16m from the landward toe of the Adur tidal defences.

We are aware that a Marine Licence has been, or will be, submitted for the proposed development. It is possible that the requirement for a FRAP can be ‘disapplied’ subject to the approval of a Marine Licence that satisfies us that any relevant issues have been addressed.

The following information would be required for any FRAP, and therefore we recommend it is submitted with any Marine Licence, if the developer intends to request that the FRAP requirement be disapplied:

- environmental risk assessment
- management system describing your method of work and what you'll do to manage the risks identified in the risk assessment
- plans and documents describing your activities and any other supporting information

For any further advice, please contact our local team responsible for FRAPs at PSOWestSussex@environment-agency.gov.uk.

This planning response does not prejudice our position on any FRAP or Marine Licence.

Final comments
If you are minded to grant permission without any of the above conditions, please contact me directly before making the formal decision. We would want to have the opportunity to understand the material considerations that outweigh our recommendations, and possibly make further representations.

If you wish to discuss any of the above points, or if I can be of any other assistance, please do not hesitate to contact me.

Yours sincerely

Mr David Griggs
Planning Advisor

Direct dial 02030 259625
Direct e-mail PlanningSSD@environment-agency.gov.uk

cc DaviesMurch

End

creating a better place
for people and wildlife

Environment Agency

Adur & Worthing Councils
Planning team
Portland House
Richmond Road
Worthing
West Sussex
BN11 1LF

Our ref: HA/2023/124783/01
Your ref: AWDM/2039/22

Date: 30 January 2023

Dear Planning team (FAO: Stephen Cantwell),

DEMOLITION OF EXISTING BUILDINGS, CONSTRUCTION OF 176NO. ONE- AND TWO-BEDROOM RESIDENTIAL APARTMENTS AND COMMERCIAL DEVELOPMENT OVER 4 BLOCKS BETWEEN 5 AND 9 LEVELS, BASEMENT PARKING AND RAISED DECK, NEW HIGHWAY ACCESS, FLOOD DEFENCES, DRAINAGE INFRASTRUCTURE, LANDSCAPING AND ANCILLARY DEVELOPMENT. (INCLUDING CHANGES IN HEIGHTS AND REDUCTION FROM PREVIOUSLY PROPOSED 183NO. APARTMENTS TO 176NO.).

69 - 75 BRIGHTON ROAD, SHOREHAM-BY-SEA, WEST SUSSEX, BN43 6RE.

Thank you for consulting the Environment Agency on the above application.

We have reviewed the information as submitted and set out our position and comments below.

Environment Agency position

We have no objection to the proposal provided that the following conditions be attached to any planning permission granted, and that the details in relation to these conditions be submitted and approved by the Local Planning Authority.

Condition 1 – Flood risk

The development shall be carried out in accordance with the submitted Flood Risk Assessment ('FRA') (Project ref: 332510124/4001, Doc ref: Revision D, dated November 2022, by Stantec) and the following mitigation measures it details:

- **The finished floor levels of the residential properties shall be set no lower than 6.2 metres above Ordnance Datum (AOD) (sections 4.8.4, 6.6.1 & 10.2.1 of the FRA).**

- **The finished floor levels of the commercial units shall be set no lower than 4.4 metres above Ordnance Datum (AOD) (sections 4.8.4 & 6.5.2 of the FRA).**

- **Hard defences in the form of a podium deck shall be installed at 5.6 metres above Ordnance Datum (AOD) prior to occupation of the site (sections 4.8.3, 6.3.1, 6.3.6, 6.3.7, 8.3.4 & 10.2.1).**

- **A new SSP wall will be installed along the riverside frontage prior to occupation to replace the existing wall, which is in poor condition (section 6.4 of the FRA). The new SSP wall shall be designed with a life of 100 years, or a maintenance plan provided to show how the wall will be managed through 100 years. The final designs of the new SSP wall shall be submitted to, and approved in writing by, the Local Planning Authority prior to construction.**

- **A minimum of 5 metres access will be provided behind the riverside frontage to allow for future maintenance of the frontage (section 6.3.3 of the FRA).**

These mitigation measures shall be fully implemented prior to occupation and subsequently in accordance with the scheme's timing/phasing arrangements.

The measures detailed above shall be retained and maintained thereafter throughout the lifetime of the development.

Reasons for condition 1

To reduce the risk of flooding to the proposed development and future occupants.

To ensure the structural integrity of the proposed flood defences thereby reducing the risk of flooding.

The condition is in line with the Planning Practice Guidance (PPG) to the National Planning Policy Framework (NPPF) for Flood Risk and Coastal Change.

Condition 2 – Demountable flood defence barrier/flood gate for basement car park

The development hereby permitted must not be commenced until such time as a specification for the demountable flood defence barrier/flood gate for the basement car park (as per section 6.8.5 of the submitted Flood Risk Assessment, Project ref: 332510124/4001, Doc ref: Revision D, dated November 2022, by Stantec), details of the level of protection it will provide and a schedule for maintenance and inspection of the demountable flood defence barrier/flood gate once installed has been submitted to, and approved in writing by, the Local Planning Authority.

Reasons

Further details of the type of barrier/flood gate are required, including the expected level of protection it will provide before installation to ensure it will be adequate.

We strongly recommend that the Applicant ensures the barrier/flood gate is subject to an appropriate level of testing as soon as possible once in place to ensure it is installed correctly by the contractors and able to perform in the manner expected. Subsequently, regular maintenance and inspection is extremely important to ensure the barrier/flood gate continues to perform its function to a satisfactory standard.

Condition 4 - Previously unidentified contamination

If, during development, contamination not previously identified is found to be present at the site then no further development (unless otherwise agreed in writing with the Local Planning Authority) shall be carried out until a remediation strategy detailing how this contamination will be dealt with has been submitted to, and approved in writing by, the Local Planning Authority.

The remediation strategy shall be implemented as approved.

Reasons for condition 4

To ensure that the development does not contribute to, and is not put at unacceptable risk from or adversely affected by, unacceptable levels of water pollution from previously unidentified contamination sources at the development site. This is in line with paragraph 174 of the National Planning Policy Framework.

Condition 5 – Remediation strategy

No development approved by this planning permission shall commence until a remediation strategy to deal with the risks associated with contamination of the site in respect of the development hereby permitted, has been submitted to, and approved in writing by, the Local Planning Authority. This strategy will include the following components:

1. **A preliminary risk assessment which has identified:**
   - **all previous uses;**
   - **potential contaminants associated with those uses;**
   - **a conceptual model of the site indicating sources, pathways and receptors; and**
   - **potentially unacceptable risks arising from contamination at the site.**

2. **A site investigation scheme, based on (1) to provide information for a detailed assessment of the risk to all receptors that may be affected, including those off-site.**

3. **The results of the site investigation and the detailed risk assessment referred to in (2) and, based on these, an options appraisal and remediation strategy giving full details of the remediation measures required and how they are to be undertaken.**

4. **A verification plan providing details of the data that will be collected in order to demonstrate that the works set out in the remediation strategy in (3) are complete and identifying any requirements for longer-term monitoring of pollutant linkages, maintenance and arrangements for contingency action.**

Any changes to these components require the written consent of the Local Planning Authority.

The scheme shall be implemented as approved.

Reasons for condition 5

The previous use of the proposed development site as an industrial site of various uses

presents a high risk of contamination that could be mobilised during construction to pollute controlled waters. Controlled waters are particularly sensitive in this location because the proposed development site is located upon a Principal Aquifer.

The submitted Phase 2 Ground Investigation (Reference: 47462/3502/GIR/Rev00, dated March 2021, by Stantec) demonstrates that it will be possible to manage the risks posed to controlled waters by this development. Further detailed information will however be required before built development is undertaken. We believe that it would place an unreasonable burden on the developer to ask for more detailed information prior to the granting of planning permission but respect that this is a decision for the Local Planning Authority.

In light of the above, the proposed development will be acceptable if a planning condition is included requiring the submission of a remediation strategy. This should be carried out by a competent person in line with paragraph 183 of the National Planning Policy Framework.

Without this condition we would object to the proposal in line with paragraph 174 of the National Planning Policy Framework because it cannot be guaranteed that the development will not be put at unacceptable risk from, or be adversely affected by, unacceptable levels of water pollution.

Condition 6 - Verification report

Prior to any part of the permitted development being occupied a verification report demonstrating the completion of works set out in the approved remediation strategy and the effectiveness of the remediation shall be submitted to, and approved in writing, by the Local Planning Authority. The report shall include results of sampling and monitoring carried out in accordance with the approved verification plan to demonstrate that the site remediation criteria have been met.

Reasons for condition 6

To ensure that the site does not pose any further risk to the water environment by demonstrating that the requirements of the approved verification plan have been met and that remediation of the site is complete. This is in line with paragraph 174 of the National Planning Policy Framework.

Please notify us immediately if you are unable to apply our suggested conditions to allow further consideration and advice.

Advice to the Local Planning Authority and Applicant

Intertidal habitat

We are pleased that the proposal does not propose any encroachment into the harbour so that there is no loss of intertidal habitat. If the proposal changes and there is a threat of loss of any amount of intertidal habitat, we must be re-consulted on the proposal. In such circumstances, we would expect the Applicant to demonstrate and justify why avoiding the loss is not possible and the mitigation measures/like-for-like compensatory habitat that would be proposed, as per the 'Guidance Note for Applicants within Adur that have the Potential to Cause Significant (Harmful or Negative) Impacts to Intertidal

Habitats'.

Risks from floating vehicles during flood event

This development has been proposed within an area identified as being at risk of flooding and includes the provision of car parking within a basement. The Applicant should be aware that vehicles can start to float in flood depths of less than 60cm – less if it is fast-flowing. The Applicant must satisfy themselves that any relevant building will be constructed in such a way that vehicles floating or displaced as a result of flooding would not jeopardise its structural stability.

In addition, the Applicant should ensure that any sensitive infrastructure such as gas and water pipes or electrical cabling are located and designed to withstand the potential impacts of floating or displaced vehicles.

Advice to the Local Planning Authority

Flood warning and emergency response

We do not normally comment on or approve the adequacy of flood emergency response procedures accompanying development proposals, as we do not carry out these roles during a flood. Our involvement with this development during an emergency will be limited to delivering flood warnings to occupants/users covered by our flood warning network. The Planning Practice Guidance (PPG) to the National Planning Policy Framework states that, in determining whether a development is safe, the ability of residents and users to safely access and exit a building during a design flood and to evacuate before an extreme flood needs to be considered. One of the key considerations to ensure that any new development is safe is whether adequate flood warnings would be available to people using the development.

In all circumstances where warning and emergency response is fundamental to managing flood risk, we advise local planning authorities to formally consider the emergency planning and rescue implications of new development in making their decisions. As such, we recommend you refer to 'Flood risk emergency plans for new development' and undertake appropriate consultation with your emergency planners and the emergency services to determine whether the proposals are safe in accordance with paragraph 167 of the NPPF and the guiding principles of the PPG.

Advice to the Applicant

Flood Risk Activity Permit

The Environmental Permitting (England and Wales) Regulations 2016 requires a permit (called a 'Flood Risk Activity Permit') to be obtained for any activities which will take place:

- On or within 8 metres of a main river (16 metres if tidal).
- On or within 8 metres of a flood defence structure or culverted main river (16 metres if tidal).

We note that the Flood Risk Assessment does acknowledge the need for a permit. For further guidance please visit https://www.gov.uk/guidance/flood-risk-activities-environmental-permits or contact our National Customer Contact Centre on 03708 506

506 (Monday to Friday, 8am to 6pm) or by emailing enquiries@environment-agency.gov.uk.

The Applicant should note that a permit is separate to and in addition to any planning permission granted. The granting of planning permission does not necessarily lead to the granting of a permit.

Signing up for flood warnings

The Applicant/occupants should phone Floodline on 0345 988 1188 to register for a flood warning or visit https://www.gov.uk/sign-up-for-flood-warnings. Our flood warning service is a free service that provides warnings of flooding from rivers, the sea and groundwater, direct by telephone, email, or text message. Anyone can sign up.

Flood warnings can give people valuable time to prepare for flooding – time that allows them to move themselves, their families, and precious items to safety. Flood warnings can also save lives and enable the emergency services to prepare and help communities.

Land contamination: risk management and good practice

We recommend that developers should:

- Follow the risk management framework provided in Land Contamination: Risk Management, when dealing with land affected by contamination.

- Refer to our Guiding principles for land contamination for the type of information that we require in order to assess risks to controlled waters from the site - the local authority can advise on risk to other receptors, such as human health.

- Consider using the National Quality Mark Scheme for Land Contamination Management which involves the use of competent persons to ensure that land contamination risks are appropriately managed.

- Refer to the contaminated land pages on gov.uk for more information.

Waste on-site

The CL:AIRE Definition of Waste: Development Industry Code of Practice (version 2) provides operators with a framework for determining whether or not excavated material arising from site during remediation and/or land development works is waste or has ceased to be waste. Under the Code of Practice:

- Excavated materials that are recovered via a treatment operation can be reused on-site providing they are treated to a standard such that they are fit for purpose and unlikely to cause pollution.
- Treated materials can be transferred between sites as part of a hub and cluster project.
- Some naturally occurring clean material can be transferred directly between sites.

Developers should ensure that all contaminated materials are adequately characterised both chemically and physically, and that the permitting status of any proposed on-site operations are clear. If in doubt, the Environment Agency should be contacted for advice at an early stage to avoid any delays (03708 506 506 (Monday to Friday, 8am to

Cont/d..

6pm) or by emailing enquiries@environment-agency.gov.uk).

We recommend that developers should refer to:

- The position statement on the Definition of Waste: Development Industry Code of Practice.

- The waste management page on gov.uk.

Waste to be taken off-site

Contaminated soil that is (or must be) disposed of is waste. Therefore, its handling, transport, treatment and disposal are subject to waste management legislation, which includes:

- Duty of Care Regulations 1991
- Hazardous Waste (England and Wales) Regulations 2005
- Environmental Permitting (England and Wales) Regulations 2016
- The Waste (England and Wales) Regulations 2011

Developers should ensure that all contaminated materials are adequately characterised both chemically and physically in line with British Standard BS EN 14899:2005 'Characterization of Waste - Sampling of Waste Materials - Framework for the Preparation and Application of a Sampling Plan' and that the permitting status of any proposed treatment or disposal activity is clear. If in doubt, the Environment Agency should be contacted for advice at an early stage to avoid any delays (03708 506 506 (Monday to Friday, 8am to 6pm) or by emailing enquiries@environment-agency.gov.uk).

If the total quantity of hazardous waste material produced or taken off-site is 500kg or greater in any 12-month period, the developer will need to register with us as a hazardous waste producer. Refer to the hazardous waste pages on gov.uk for more information.

If you have any queries regarding the above information, please do not hesitate to contact the advisor identified below.

Yours faithfully,

Environment Agency – Solent & South Downs

Sustainable Places Advisor: Anna Rabone
Direct dial: 02077 140525
Direct e-mail: anna.rabone@environment-agency.gov.uk

End

Appendix B Drawings

Drawing 332610573/100/01a	Site Location (Context)
Drawing 332610573/100/01b	Site Location Plan
Drawing 332610573/100/01c	Site Location Plan (Aerial)
Drawing 332610573/100/02	Composite Exploratory Hole Location Plan
Drawing 19_400-PL03 (Revision B)	Proposed Ground Floor Plan
Drawing 19_400-PL04 (Revision B)	Proposed Basement Floor Plan
Drawing 15686-HOP-ZZ-XX-DR-S-0010 (Revision P2)	General Arrangement (River Wall)
Drawing 47462/4001/002	Proposed Surface Water Drainage Catchments
Drawing 47462/4001/003	Surface Water Strategy
Drawing 47462/4001/004	Surface Water Drainage Details
Drawing 2937-LMP-101	Composite Landscape Masterplan



Contains Ordnance Survey data © Crown copyright and database right 2021

Site Grid Reference: TQ 220 050

Brighton Road, Shoreham-by-Sea,
WEST SUSSEX

Site Location (Context)

Client
New Ways
Construction Ltd

Date of 1st Issue	Drawn by
08.09.2023	JH
A4 Scale	Checked by
1:50 000	OB

Drawing Number
332610573/100/01a

Stantec

stantec.com/uk

Copyright reserved
The copyrights to all designs and drawings are the property of Stantec. Reproduction or use for any purpose other than that authorised by Stantec is forbidden.

Tel: 01189 500 761

N

Shoreham-by-Sea Train Station

Indicative Site Boundary
Main Rivers

Ham Road

A259 (Brighton Road)

New Road

River Adur

	Client New Ways Construction Ltd	**Brighton Road, SHOREHAM-BY-SEA, WEST SUSSEX** Site Location Plan	0 100 200 m Contains OS data © Crown Copyright and database right 2020	1:2,000 @ A3	Date: 11/09/2023
				Drawn: JH	Checked: SK
				Drawing 332610573/100/01b	Rev -

N

Indicative Site Boundary

Client

New Ways Construction Ltd

Brighton Road, SHOREHAM-BY-SEA, WEST SUSSEX

Site Location Plan (Aerial)

0 100 200 m

Source: Esri, DigitalGlobe, GeoEye, Earthstar Geographics, CNES/Airbus DS, USDA, USGS, AeroGRID, IGN, and the GIS User Community

1:2,000 @ A3	Date: 11/09/2023
Drawn: JH	Checked: SK
Drawing 332610573/100/01c	Rev -

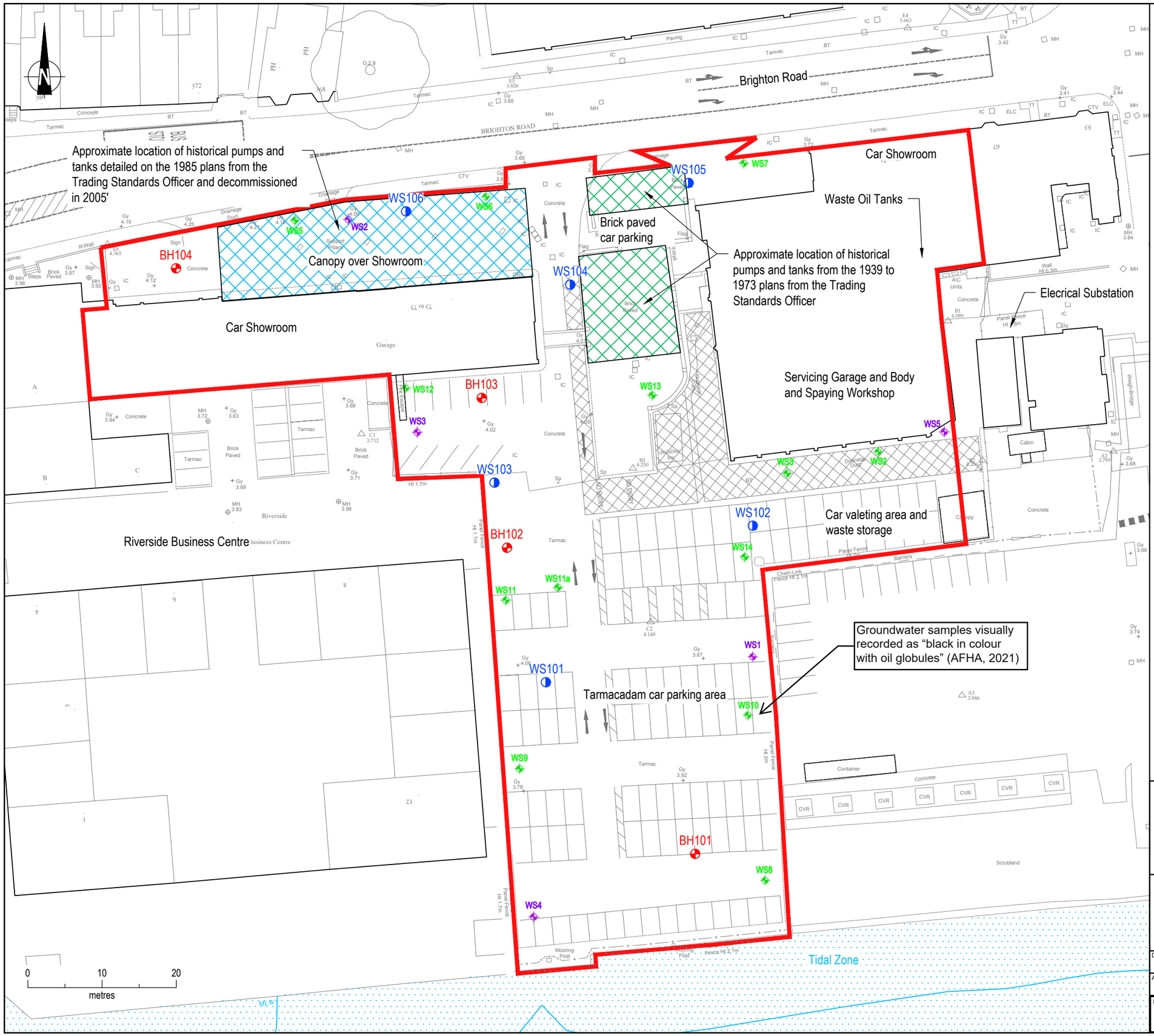

Key

Approximate Site Boundary

A F Howland Associates (2021)

- Borehole Location
- Window Sample Location

Geodyne (2012)

- Window Sample Location

Ashdown Site Investigation (2005)

- Window Sample Location

Brighton Road, Shoreham-by-Sea,
WEST SUSSEX

Composite Exploratory Hole Location Plan

Client
New Ways Construction Ltd

Date of 1st Issue: 08.09.2023	Drawn by: JH
A3 Scale: 1:500	Checked by: OB

Drawing Number: 332610573/100/02

Stantec

stantec.com/uk

Copyright reserved
The copyrights to all designs and drawings are the property of Stantec. Reproduction or use for any purpose other than that authorised by Stantec is forbidden.

Tel: 01189 500 761



NOTES

1:50 1 2.5
1:100 2 5
1:200 4 10
1:500 0 10 25

N

Revision	Amendment	Drawn by	Date
B	Alterations to comply with fire safety regulations	AB	23/01/2023
A	Reposition of doors and windows on B1 and B4	AB	06/01/2023

Drawing Status: PLANNING

bryant + moore ARCHITECTS
19-25 Salisbury Square
Old Hatfield, Herts
AL9 5BT
Tel: 01707 251428
Email: mb@bryantandmoore.co.uk
Web: www.bryantandmoore.co.uk

Client: -

Address: 69-75 BRIGHTON ROAD
SHOREHAM-BY-SEA
BN43 6RE

Title: NEW BUILT MIXED-USE DEVELOPMENT

PROPOSED GROUND FLOOR PLAN

Scale	1:500@A3	Drawing No.	PL03
Project No.	19_400	Revision No.	B

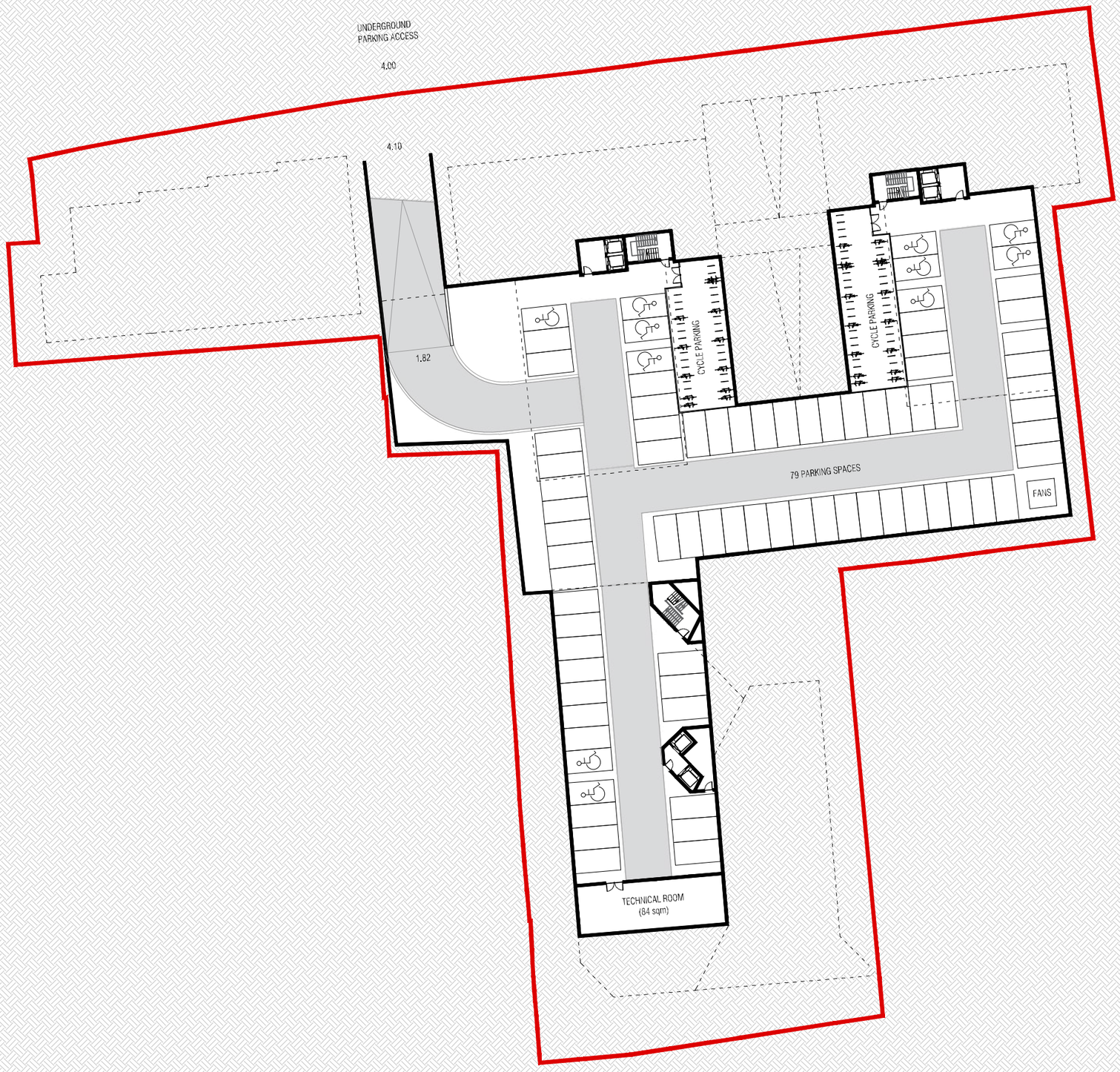

NOTES

1:50	1	2.5
1:100	2	5
1:200	4	10
1:500	0 10	25

N

Revision	Amendment	Drawn by	Date
B	Alterations to comply with fire safety regulations	AB	23/01/2023
A	Disabled parking spaces and labels	AB	03/01/2023

Drawing Status: PLANNING

bryant + moore
ARCHITECTS
19-25 Salisbury Square
Old Hatfield, Herts
AL9 5BT
Tel: 01707 251428
Email: mb@bryantandmoore.co.uk
Web: www.bryantandmoore.co.uk

Client: -

Address: 69-75 BRIGHTON ROAD
SHOREHAM-BY-SEA
BN43 6RE

Title: NEW BUILT MIXED-USE DEVELOPMENT

PROPOSED BASEMENT FLOOR PLAN

Scale	1:500@A3	Drawing No.	PL04
Project No.	19_400	Revision No.	B

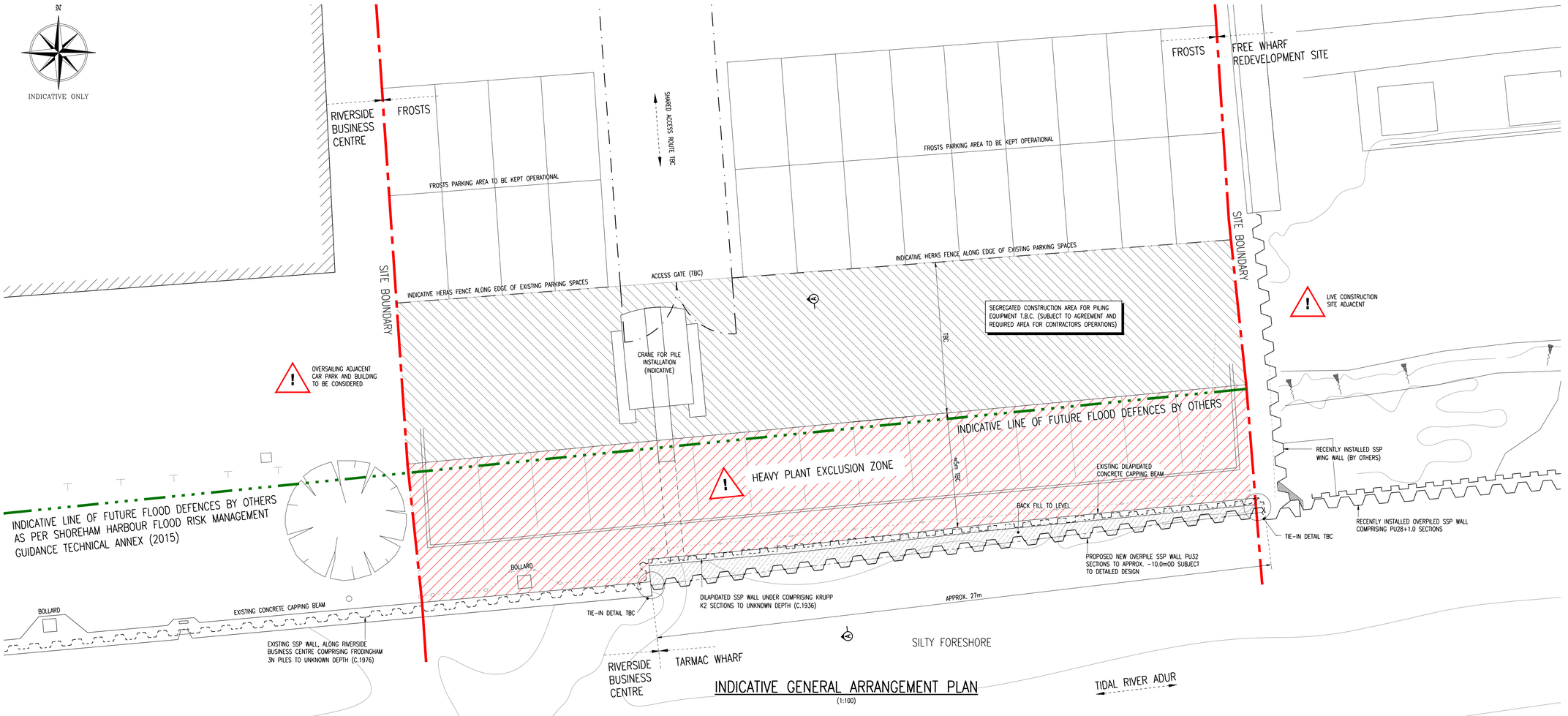

INDICATIVE GENERAL ARRANGEMENT PLAN
(1:100)

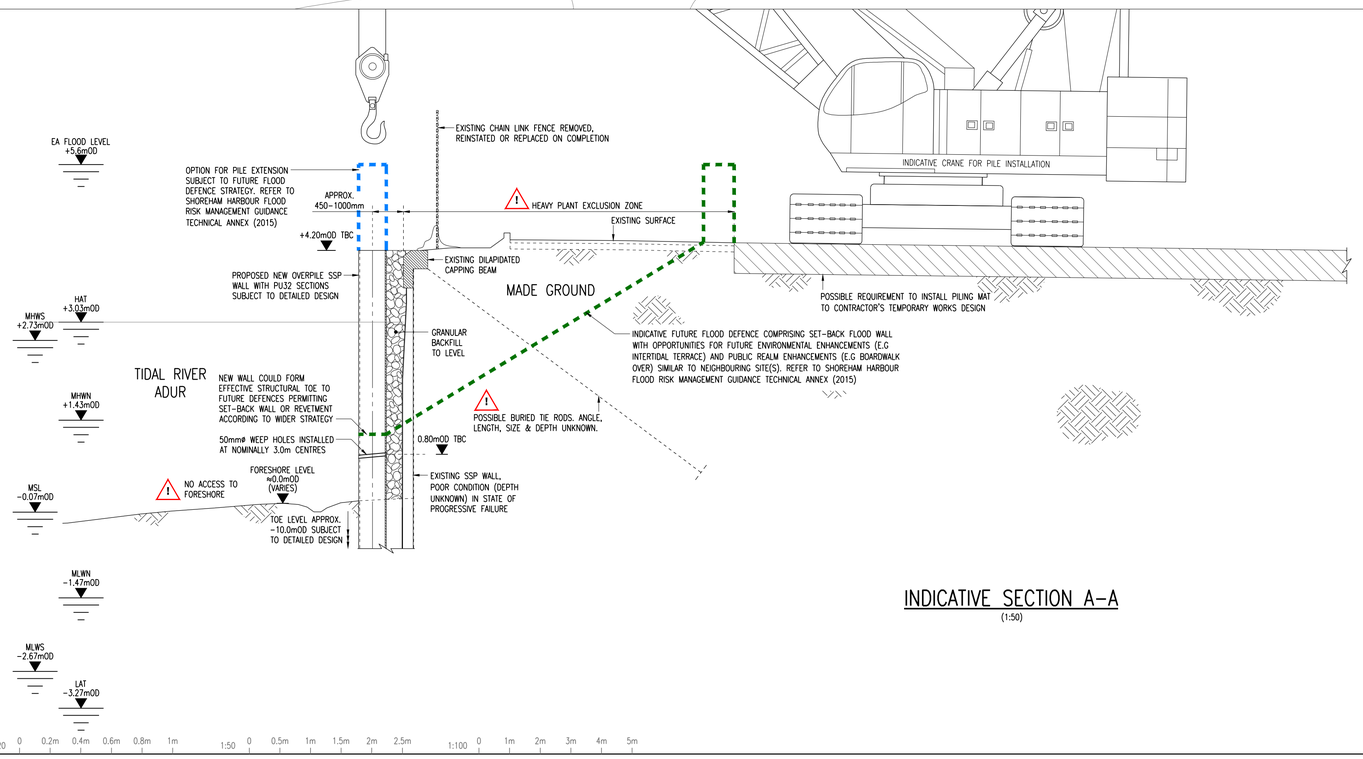

INDICATIVE SECTION A-A
(1:50)

DESIGNERS RISK ASSESSMENT

REF	HAZARD	RISK	POTENTIAL MITIGATION
1	WORKING AT HEIGHT	FALL LEADING TO INJURY, FATALITY	CONSIDER USE OF A PERMIT TO WORK SYSTEM. PROVISION OF FALL RESTRAINT SYSTEM. COLLECTIVE PROTECTION MEASURES SHOULD BE FAVOURED OVER PPE.
2	WORKING NEAR/OVER TIDAL RIVER	FALLING INTO WATER LEADING TO INJURY, ILLNESS OR DEATH.	PROVIDE EDGE PROTECTION. LIMIT ACCESS TO WATER SIDE TO ESSENTIAL OPERATIVES ONLY AND PROVIDE SUITABLE PPE WHERE COLLECTIVE MEASURES SUCH AS EDGE PROTECTION CANNOT BE IMPLEMENTED. PROVIDE LIFE-SAVING EQUIPMENT. WORKS ON THE FORESHORE IS NOT PERMITTED.
3	PLANT OPERATIONS AND LIFTING	FAILURE OF LIFTING EQUIPMENT, FALLING MATERIALS, OVERTURNING PLANT LEADING TO INJURY, DEATH.	LOCATE PLANT ON SUITABLE SURFACE. MINIMISE LIFT RADIUS AND WEIGHT WHERE POSSIBLE. LIMIT ACCESS TO ESSENTIAL PERSONAL ONLY. USE OF BANKSMAN AS APPROPRIATE DURING OPERATIONS. MONITOR AND MAINTAIN SURFACE
4	COASTALLY EXPOSED SITE	INSTABILITY OF PLANT, SWINGING LOADS, POSSIBLE COLLAPSE OR DAMAGE TO HOARDINGS/FENCES LEADING TO INJURY	HIGH WIND SPEEDS WHICH MAY IMPACT ON PLANT, HOARDING OR TEMPORARY WORKS SELECTION. MONITOR WEATHER AND USE TAG LINES FOR LIFTING ETC. AS REQUIRED. LIMIT OPERATIONAL WIND SPEEDS FOR CRANAGE
5	EXISTING WALL IN POOR CONDITION	INSTABILITY OF GROUND BEHIND WALL.	HEAVY PLANT NOT PERMITTED WITHIN EXCLUSION ZONE, RESTRICT ACCESS TO PERSONNEL AND LIGHT PLANT ONLY.
6	VESSELS	VESSEL IMPACT WITH WORKS.	LIAISE WITH LOCAL HARBOUR AUTHORITY FOR SCHEDULED VESSEL MOVEMENTS. ISSUE NOTICE TO MARINERS
7	VEHICLE MOVEMENTS	INJURY/FATALITY, DAMAGE TO PLANT OR EQUIPMENT	LIMIT ACCESS TO ESSENTIAL VEHICLES ONLY ON SITE, USE A BANKSMAN.
8	OBSTRUCTIONS TO PILING	DESTABILISATION OF EXISTING STRUCTURES, DELAY TO PROJECT.	ENSURE SUFFICIENT DISTANCE FROM EXISTING WALL. CONSIDER MITIGATIONS SHOULD OBSTRUCTIONS BE ENCOUNTERED
9	NOISE AND VIBRATION DURING TO PILING ACTIVITY	DAMAGE TO EXISTING NEARBY STRUCTURES	CONSIDER USE OF VIBRATION MONITORING, AND USE OF SOFT START AND VIBRATORY PILING. IMPACT DRIVING TO BE USED ONLY IF ABSOLUTELY NECESSARY TO ACHIEVE REQUIRED STRUCTURAL DEPTH. INSTALL PILES 'IN THE DRY' WHEN TIDE IS SUFFICIENTLY LOW
10	BURIED SERVICES	ELECTROCUTION, EXPLOSION AND/OR PILE OBSTRUCTIONS	DESK STUDY/SITE INVESTIGATION SHOULD BE CARRIED OUT TO ASCERTAIN LIKELIHOOD OF RISK. ASSUME SERVICES ARE LIVE UNLESS PROVEN OTHERWISE. CONSIDER USE OF CPR/CAT SCAN.
11	UXO	PERSONAL INJURY OR DEATH, DAMAGE TO CONSTRUCTION PLANT AND/OR SURROUNDING PROPERTY, DELAY TO PROJECT	CONSIDER UXO DESK STUDY CARRIED OUT BY SPECIALIST. RISK CONSIDERED LIKELY TO BE LOW.
12	LIVE CONSTRUCTION SITE ADJACENT	HAZARDS ASSOCIATED WITH POOR COMMUNICATION. RISK OF GROUND INSTABILITY DUE TO ADJACENT EXCAVATIONS. RISK OF INJURY TO PERSONS, DAMAGE TO PLANT OR DELAYS TO PROGRAMME	GOOD (DAILY) COMMUNICATION SHOULD BE MAINTAINED BETWEEN PRINCIPAL CONTRACTORS OF BOTH SITES TO ENSURE CO-ORDINATION OF WORKS AND HAZARD AWARENESS. A PHYSICAL BARRIER SHOULD BE MAINTAINED AT ALL TIMES.
13	OVERSAILING ADJACENT PROPERTY	SUSPENDED LOADS OVER VEHICLES OR PERSONS LEADING TO FALLING OBJECTS CAUSING INJURY OR DAMAGE	OVERSAILING SHOULD BE AVOIDED. IF OVERSAILING IS UNAVOIDABLE, IT MUST BE AGREED WITH THE NEIGHBOURING PARTY WITH SUFFICIENT NOTICE.
14	DISRUPTION TO FROSTS	ADDITIONAL COSTS, DELAYS TO PROGRAMME	CONTRACTOR TO MAINTAIN GOOD COMMUNICATION WITH FROSTS CARS TO MINIMISE DISRUPTION

Project/Task No. 15686/01 Scale: AS SHOWN ORIGINAL DRAWING SIZE A1

1. GENERAL

(i) This drawing is not to be scaled, work to figured dimensions only, confirmed on site.

(ii) This drawing is to be read in conjunction with all relevant architectural drawings, detailed specifications where applicable and all associated drawings in this series.

(iii) Any discrepancy on this drawing is to be reported immediately to the partnership for clarification.

(iv) The contractor is responsible for all temporary works and for the stability of the works in progress.

(v) Site layout indicative only. Subject to contractors requirements and agreement with Frosts.

(vi) Access, welfare and security arrangements to contractors details.

(vii) Contractor to advise on plant requirements.

ISSUED FOR INFORMATION	LRS	WPM	23.01.20	P2
ISSUED FOR COMMENT	MP	WPM	18.12.19	P1
Description	By	Aprvd.	Date	Rev.

PRELIMINARY DRAWING
NOT FOR CONSTRUCTION

Title: GENERAL ARRANGEMENT DRAWING

Project: URGENT RIVER WALL REPAIRS FROSTS, SHOREHAM-BY-SEA

Client: FROSTS CARS LIMITED

HOP
CONSULTING CIVIL AND STRUCTURAL ENGINEERS
HOP House, 41 Church Road
Hove, East Sussex BN3 2BE
www.hop.uk.com
ask@hop.uk.com
+44 (0)1273 223900

Drawing No. 15686-HOP-ZZ-XX-DR-S-0010 Status S0 Rev. P2

© Copyright
P:\PROJECTS\15686 Frosts, Brighton Road, Shoreham\Drawings\HOP\Lauren\15686-HOP-ZZ-XX-DR-S-0010 Lily Stephenson



Stantec

Stantec UK Limited
READING
Caversham Bridge House, Waterman Place, Reading,
Berkshire RG1 8DN
Tel: +44 1189 500 761
www.stantec.com/uk

Copyright Reserved

The Contractor shall verify and be responsible for all dimensions. DO NOT scale the drawing - any errors or omissions shall be reported to Stantec without delay.
The Copyrights to all designs and drawings are the property of Stantec. Reproduction or use for any purpose other than that authorized by Stantec is forbidden.

Notes

1. THIS DRAWING IS TO BE READ IN CONJUNCTION WITH ALL OTHER ENGINEERS DRAWINGS.

2. ALL DIMENSIONS ARE IN METRES UNLESS NOTED OTHERWISE.

3. DO NOT SCALE FROM THIS DRAWING.

4. ALL LEVELS ARE IN METRES ABOVE ORDNANCE DATUM (AOD).

KEY:

- CATCHMENT 1 - IMPERMEABLE SURFACE (INCLUDED IN CONTRIBUTING AREA FOR CATCHMENT 1 CALCULATION)
- CATCHMENT 1 - PERVIOUS SURFACE ON PODIUM DECK (INCLUDED IN CONTRIBUTING AREA FOR CATCHMENT 1 CALCULATION)
- CATCHMENT 1 - DRAIN DIRECTLY OVER THE WALL (NOT INCLUDED IN CONTRIBUTING AREA FOR CATCHMENT 1 CALCUALTION)
- CATCHMENT 2 - IMPERMEABLE SURFACE (INCLUDED IN CONTRIBUTING AREA FOR CATCHMENT 2 CALCULATION)
- CATCHMENT 2 - PERVIOUS SURFACE ON PODIUM DECK (INCLUDED IN CONTRIBUTING AREA FOR CATCHMENT 2 CALCULATION)
- CATCHMENT 2 - DRAIN DIRECTLY OVER THE WALL (NOT INCLUDED IN CONTRIBUTING AREA FOR CATCHMENT 2 CALCULATION)
- CATCHMENT 3 - IMPERMABLE SURFACE (INCLUDED IN CONTRIBUTING AREA FOR CATCHMENT 3 CALCULATION)
- CATCHMENT 3 - PERVIOUS SURFACE FREELY DRAINING (NOT INCLUDED IN CONTRIBUTING AREA FOR CATCHMENT 3 CALCULATION)

Issued/Revision	By	Appd	YYYY.MM.DD
C MINOR AMMENDMENTS	RPW	SK	2022.12.14

Dwn.	Dsgn.	Chkd.	YYYY.MM.DD
GN	GN	GN	2022.12.13

Issue Status

FOR PLANNING

This document is suitable only for the purpose noted above.
Use of this document for any other purpose is not permitted.

Client/Project Logo

Client/Project
SHOREHAM BRIGHTON ROAD LTD

69-75 BRIGHTON ROAD, SHOREHAM

Title
PROPOSED SURFACE WATER DRAINAGE CATCHMENTS

Project No.	Scale
47462	1:250

Revision	Drawing No.
C	47462/4001/002



Stantec

Stantec UK Limited
READING
Caversham Bridge House, Waterman Place, Reading,
Berkshire RG1 8DN
Tel: +44 1189 500 761
www.stantec.com/uk

Copyright Reserved

The Contractor shall verify and be responsible for all dimensions. DO NOT scale the drawing - any errors or omissions shall be reported to Stantec without delay.
The Copyrights to all designs and drawings are the property of Stantec. Reproduction or use for any purpose other than that authorized by Stantec is forbidden.

Notes

1. THIS DRAWING IS TO BE READ IN CONJUNCTION WITH ALL OTHER ENGINEERS DRAWINGS.
2. ALL DIMENSIONS ARE IN METRES UNLESS NOTED OTHERWISE.
3. DO NOT SCALE FROM THIS DRAWING.
4. ALL LEVELS ARE IN METRES ABOVE ORDNANCE DATUM (AOD).

KEY:

- SITE BOUNDARY
- PROPOSED BASEMENT/PODIUM EXTENT
- WATER COURSE
- PERMEABLE PAVING ON PODIUM DECK (SEE STANTEC DRAWING 47462/4001/004 FOR DETAIL)
- PERMEABLE PAVING ON FOOT WAYS (SEE STANTEC DRAWING 47462/4001/004 FOR DETAIL)
- PERMEABLE SURFACE WITH GRASS TOP ON PODIUM DECK (SEE STANTEC DRAWING 47462/4001/004 FOR DETAIL)
- PROPOSED SURFACE WATER DRAINAGE
- INDICATIVE LOCATION OF PROPOSED CHANNEL DRAIN WITH GRATE
- CHANNEL DRAIN ACO OR SIMILAR (SEE STANTEC DRAWING 47462/4001/004 FOR DETAIL)
- FLOW ROUTES
- PROPOSED DOWN PIPE AND DIFFUSER
- EX SWS — APPROXIMATE LOCATION OF EXISTING SURFACE WATER SEWER PIPE (CCTV SURVEY UNABLE TO ACCESS DUE TO BLOCKAGE)
- 1.00 — PROPOSED SPOT LEVEL

Issued/Revision	By	Appd	YYYY.MM.DD
C MINOR AMMENDMENTS	RPW	SK	2022.12.14

Dwn.	Dsgn.	Chkd.	YYYY.MM.DD
JW	GN	GN	2022.12.13

Issue Status

FOR PLANNING

This document is suitable only for the purpose noted above.
Use of this document for any other purpose is not permitted.

Client/Project Logo

Client/Project

SHOREHAM BRIGHTON ROAD LTD

69-75 BRIGHTON ROAD, SHOREHAM

Title

SURFACE WATER STRATEGY

Project No.	Scale
47462	1:250

Revision	Drawing No.
C	47462/4001/003

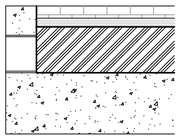

INDICATIVE PERMEABLE PAVING DETAIL - OUTLET

SCALE 1:20

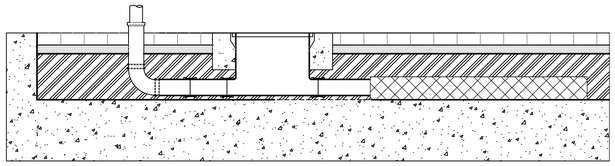

INDICATIVE PERMEABLE PAVING DETAIL - INLET DIFFUSER

OPTION B - RWP CONNECTION THROUGH TOP

SCALE 1:20

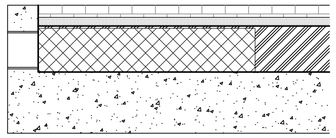

INDICATIVE PERMEABLE PAVING DETAIL - INLET DIFFUSER

TO BE POSITIONED OUTSIDE VEHICULAR TRAFFICKED AREAS

SCALE 1:20

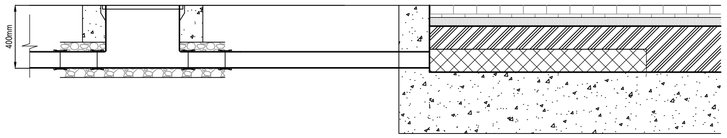

INDICATIVE PERMEABLE PAVING DETAIL - INLET DIFFUSER

OPTION A - RWP CONNECTION THROUGH SIDE

SCALE 1:20

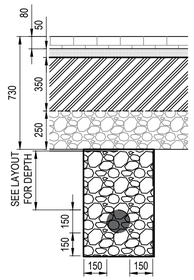

INDICATIVE PERMEABLE PAVING DETAIL - NO INFILTRATION

SCALE 1:20

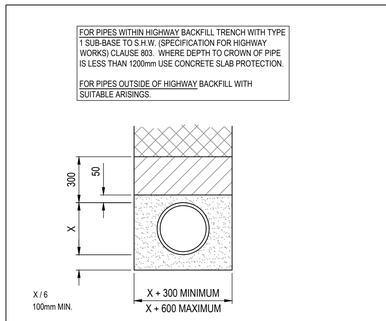

TYPE S PIPE BED & SURROUND

SCALE 1:20

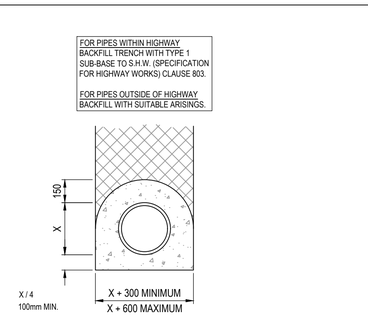

TYPE Z PIPE BED & SURROUND

TO SHALLOW RAINWATER PIPE CONNECTIONS TO PERMEABLE PAVING SYSTEM

SCALE 1:20

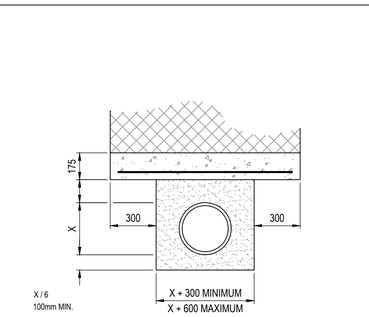

CONCRETE SLAB PROTECTION

IN TRAFFICKED AND PAVED AREA WHERE COVER TO CROWN OF PIPE IS LESS THAN 1200mm

SCALE 1:20

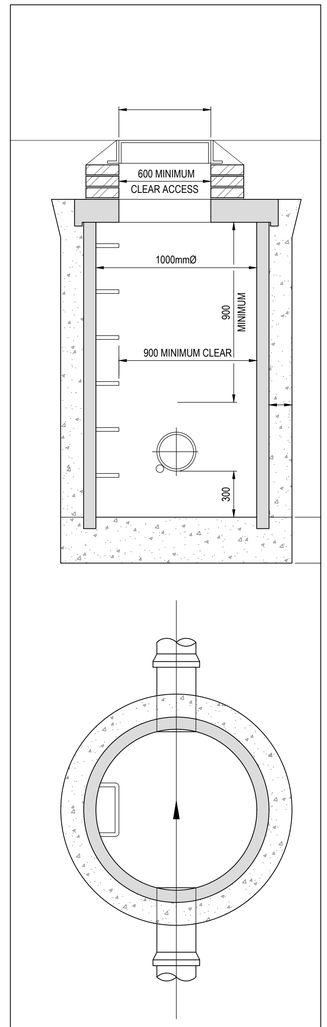

TYPICAL TYPE 1 CATCHPIT

MAXIMUM DEPTH FROM COVER LEVEL TO TOP OF BASE SLAB 3m

SCALE 1:20

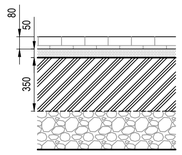

INDICATIVE PERMEABLE PAVING DETAIL - INFILTRATION

SCALE 1:20

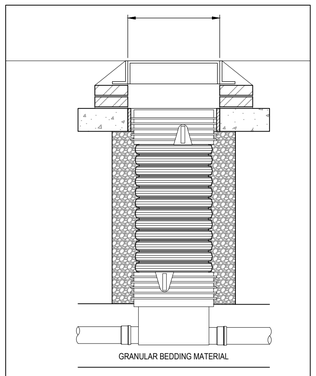

TYPICAL INSPECTION CHAMBER

SCALE 1:20

Stantec

Stantec UK Limited
READING
Caversham Bridge House, Waterman Place, Reading,
Berkshire RG1 8DN
Tel: +44 1189 500 761
www.stantec.com/uk

Copyright Reserved

The Contractor shall verify and be responsible for all dimensions. DO NOT scale the drawing - any errors or omissions shall be reported to Stantec without delay.
The Copyrights to all designs and drawings are the property of Stantec. Reproduction or use for any purpose other than that authorized by Stantec is forbidden.

Notes

KEY:

- SITE BOUNDARY
- PROPOSED BASEMENT AREAS
- PROPOSED BUILDINGS
- WATER COURSE
- PROPOSED EVACUATION ROUTES

	CS	GN	GN	2021.04.23
	Dwn.	Dsgn.	Chkd.	YYYY.MM.DD

Issue Status

FOR PLANNING

This document is suitable only for the purpose noted above.
Use of this document for any other purpose is not permitted.

Client/Project Logo

Client/Project

SHOREHAM BRIGHTON ROAD LTD

69-75 BRIGHTON ROAD, SHOREHAM

Title

SURFACE WATER DRAINAGE DETAILS

Project No.	Scale
47462	AS SHOWN
Revision	Drawing No.
-	**47462/4001/004**

Plotted: ——— By: Williams, Jessica
DWG/XLS_Used: ROOT \\corr-fps-0011.corr.group\Projects\47462 - Shoreham-by-sea, west sussex\cad\dwg\4001 hydrol\004.dwg&

Reproduced from the Ordnance Survey Map with the permission of the Controller of Her Majesty's Stationery Office © Crown Copyright
Allen Pyke Associates Ltd
Licence No.: AL100030972

North

Humphrey's Gap

EXTENT OF BASEMENT CARPARK

+3.895 +3.85
1:20
+4.56
+4.60
+4.40
1:20
+5.54 +5.58 +5.60
+5.60
+5.60
+5.60
+4.40

63-77 Brighton Road, Shoreham

Composite Landscape Masterplan

Allen Pyke
Landscape • Urban • Environmental
69A Lensfield Road, Cambridge, CB2 1EN
T 01223 358 055 www.allenpyke.co.uk
KINGSTON UPON THAMES • CAMBRIDGE

Client:
SVP Brighton Road Shoreham Ltd

Drawing Number:	Date:	Revision:
2937-LMP-101	12/01/23	*
Scale:	Drawn by/ Chk:	
1:250@ A1	SS/VF	

Appendix C Unexpected Contamination Protocol

TECHNICAL NOTE

Project Name: Proposed Development at Frosts of Shoreham, 69-75 Brighton Road, Shoreham-By-Sea, West Sussex

Project Ref: 332610573

Document Ref: 332610573/100/TN01

Date: 20 September 2023

Prepared By: James Hallier

Reviewed By: Oliver Belson

Subject: **Proposed Development at 69-75 Brighton Road, Shoreham-by-Sea - Unexpected Contamination Protocol**

1. Introduction

1.1. Stantec UK Ltd (Stantec) have developed a protocol addressing the potential for unexpected contamination that may be encountered during the proposed Enabling Works and future construction as part of the redevelopment of 69-75 Brighton Road, Shoreham-by-Sea, West Sussex (the 'Site'). This protocol is to be followed by the Principal Contractor(s) during the work associated with the demolition and construction phases of the project.

1.2. Planning Consent (ref. AWDM/2039/22) Condition No. 36 details that:

> *If, during development, contamination not previously identified is found to be present at the site then no further development (unless otherwise agreed in writing with the Local Planning Authority) shall be carried out until a remediation strategy detailing how this contamination will be dealt with has been submitted to, and approved in writing by, the Local Planning Authority. The remediation strategy shall then be implemented as approved.*
>
> *Reason: To manage existing site contamination to prevent harm to human health and to protect the water environment including groundwater and the River Adur, in accordance with para 174 of the National Planning Policy Framework 2021, Policy 34 of the Adur Local Plan 2017 and Policies SH6 & SH7 of the Shoreham Harbour Joint Area Action Plan 2019.*

1.3. To facilitate the Principal Contractor(s) with addressing this condition, an Unexpected Contamination Protocol has been devised. This protocol should be read in conjunction with the remediation strategy for the development, which provides details on the mitigation measures for the known contamination risks.

2. Background

2.1. The Site has a long industrial history including a Coal Yard, a Timber Yard, a Tarmacadam Works, and most recently a car dealership/servicing garage. Numerous investigations and assessments have been undertaken across the Site with respect to contamination.

i) Soil Engineering Limited (SEL), Site Investigation Report. Report reference 2097, dated February 1980.

ii) Ashdown Site Investigation Limited (ASI), Combined Factual Report Interpretative Report on the Site Investigation. Report reference LW16257, dated November 2005.

iii) GeoDyne Geotechnical and Environmental Consultants (GDGEC), Combined Phase I Desk Study and Phase II Ground Investigation Report. Report reference 31149, dated 28 September 2012.

iv) GeoDyne Geotechnical and Environmental Consultants (GDGEC), Final Ground Gas Assessment Report. Report reference 31149/CJP, dated 15 October 2012

v) Stantec UK Limited, Phase 1 Ground Conditions Assessment. Report reference 47462/3501/GCA/R01, dated 17 November 2020

vi) A F Howland Associates Limited, A Report on a Ground Investigation (Factual). Report reference JAH/TJS/20.325, dated 12 March 2021.

vii) Stantec UK Limited, Phase 2 Ground Investigation Report. Report reference 47462/3502/GIR/Rev00, dated 31 March 2021.

2.2. There are some limitations to these investigations, namely associated with the unknown condition of the ground and groundwater beneath the current building footprint and surrounding the underground fuel tanks, as indicated on **Figure TN01/001** (Key Features and Ground Investigation Data Spatial Gaps Plan), appended. In addition to those listed above, there may be additional documents, pertinent to the Site, that should be referred to in conjunction with this note, i.e. pre-demolition asbestos survey and contractor's risk assessment and method statements specific to the works being undertaken.

2.3. There are known contamination risks that are to be mitigated through the development of the Site and/or the implementation of an Enabling Works Remediation Strategy (EWRS) and a Secondary Remediation Strategy (SRS). These risks include:

i) Buried tanks used for the storage of petrol and diesel (various states of decommissioning undertaken) and the associated infrastructure and pumps used for the distribution of the fuel. The structural integrity of the tanks is unknown and as such pose a potentially significant risk to human health and controlled waters (surface water and groundwater) as a primary source, with the potential for spills and leaks presenting a potential source of residual contamination by the creation of potential non-aqueous phase liquid (NAPL) or dissolved phase contamination.

ii) Elevated vapour concentrations within the Made Ground (increasing in proximity to the buried tanks) that represent a potentially significant risk to human health.

iii) Locally elevated concentrations of arsenic, lead, nickel and PAHs within the Made Ground that represent a potentially significant risk to human health.

iv) Elevated concentrations of arsenic, chromium, copper, nickel, selenium, zinc, PAHs, and potentially TPH within the groundwater, which present a potentially significant risk to controlled waters.

v) Asbestos containing materials (ACMs) and loose asbestos fibres (chrysotile, amosite, and crocidolite) present within the Made Ground presenting a potentially significant risk to human health.

2.4. Based upon the Site's former and current usage there is a potential for previously unidentified contamination to be present that may pose a risk to either human health or the water environment (the underlying groundwater or the adjacent River Adur).

3. Unexpected Contamination Strategy

3.1. Assuming that the EWRS and SRS are implemented successfully then the risks posed by the contamination (outlined in Section 2.3) are considered to be Low to Negligible. However, there is a potential for areas of previously unexpected or unidentified contamination to be present, as is the case with any brownfield site, particularly in the areas highlighted **Figure TN01/001**.

3.2. The main anticipated unexpected contamination that may be encountered on-site are;

i) Soils impacted by hydrocarbons

ii) Free-phase product in the form of a non-aqueous phase liquid (NAPL)

iii) Additional buried fuel/oil tanks and associated infrastructure

iv) Asbestos in the form of fibres and asbestos containing materials (ACM) mixed within the Made Ground

3.3. This document details the strategy and protocols to be in place during the development in regard to unforeseen contamination.

i) A tool box talk will be undertaken following demolition of the above ground structures and prior to groundworks commencing with the Principal Contractor in relation to contamination and the protocol contained within this document and to confirm roles and responsibilities.

ii) A Training and Maintaining Awareness Programme – mechanisms such as posters or monthly repeat inductions to reinforce the procedure and highlighting the key steps to be followed should contamination be identified.

iii) An appointed Geoenvironmental Engineer will undertake a watching brief of at least weekly inspection visits, or at appropriate identified stages of the work programme to inspect the work site. Stantec will also provide on-site attendance at the request of the Contractor on notification of potential contamination discovery.

iv) If additional buried tanks and associated infrastructure are uncovered on-site, then the established Tank Removal Protocol (see Section 5.3 of Options Appraisal, Remediation Strategy, and Verification Plan) is to be followed once Stantec, Adur District Council, and other pertinent stakeholders have been informed.

v) If a NAPL is recorded on-site then Stantec, Adur District Council, and other pertinent stakeholders are to be informed. A specific management strategy is to be agreed with Adur District Council and other pertinent stakeholders prior to implementation, but is likely to involve a pump and treat system in the first instance (see Section 7.5 of Options Appraisal, Remediation Strategy, and Verification Plan).

vi) If any other suspected contamination (either visual or olfactory evidence including suspected asbestos containing materials) is encountered during the below ground works as part of the demolition and future construction of the redevelopment, the following procedures should be adhered to:

a) All site work at the position of the suspected contamination will cease immediately and Stantec will be notified to attend site to inspect. The works area should be securely fenced off until inspection, assessment and, if required, remediation can be satisfactorily completed.

b) Visual and olfactory observations of the condition of the ground and the extent of contamination will be made and recorded by a suitably qualified contaminated land practitioner.

c) A photographic record will be made, and the extent of the contamination surveyed.

d) The suspected contamination material will either be left in-situ or will be stockpiled (depending on its properties) whilst testing is carried out and suitable assessments completed to determine whether the material can be re-used on-Site with or without treatment or requires off-site disposal.

e) Following initial assessment this will be communicated to Adur District Council and other pertinent stakeholders (such as the Environment Agency) alongside a proposed management strategy for approval prior to undertaking the works, as required by Planning Consent Condition No. 36.

f) Where the material is left in situ awaiting results of an assessment or investigation, it will be reburied or covered with plastic sheeting to prevent direct exposure to people. Where the potentially contaminated material is to be temporarily stockpiled it will be placed on 2000-gauge plastic sheeting (or other impermeable surface) and covered to prevent dust, odour, or vapour emissions.

g) The results of assessment, subsequent remediation, if required, and verification will be incorporated into a Verification Report.

4. Verification

4.1. Should unexpected contamination be discovered during the redevelopment and following completion of the proposed construction, relevant information obtained from the steps summarised above and details of any remediation works undertaken during the construction will be presented in a verification report alongside results of any validation testing results and additional assessment of contamination. The verification report(s) will be submitted to Adur District to discharge condition No. 36 of the planning consent.

4.2. Should no unexpected contamination be discovered during the construction/development there will be no requirement to submit any additional information beyond the records of the watching brief and associated inspection notes.

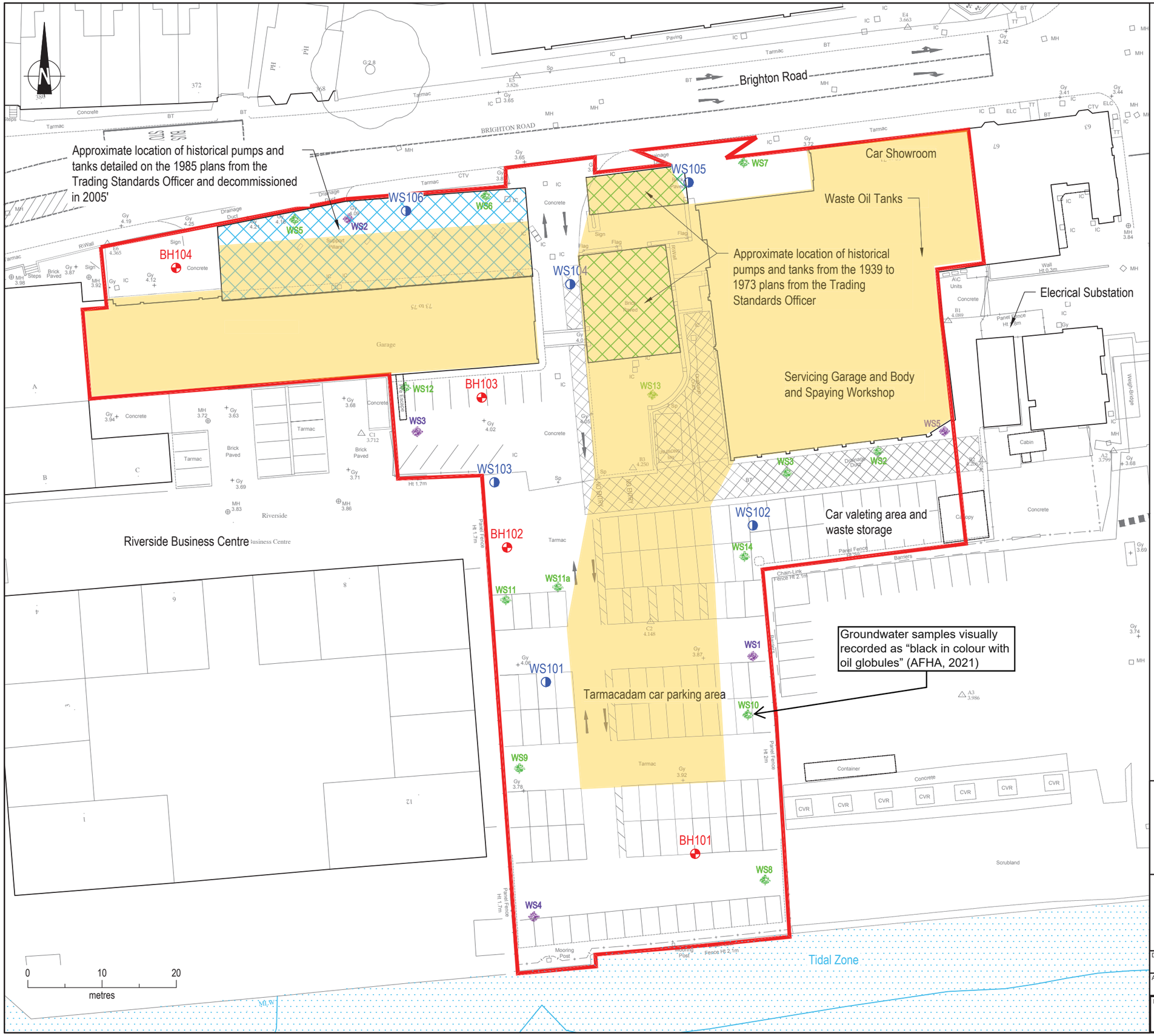

Key

- Approximate Site Boundary

A F Howland Associates (2021)

- Borehole Location
- Window Sample Location

Geodyne (2012)

- Window Sample Location

Ashdown Site Investigation (2005)

- Window Sample Location

- Identified Spatial Gaps in Ground Investigation Data

Brighton Road, Shoreham-by-Sea,
WEST SUSSEX

Key Features and Ground Investigation Data Spatial Gaps Plan

Client
New Ways Construction Ltd

Date of 1st Issue: 08.09.2023	Drawn by: JH
A3 Scale: 1:500	Checked by: OB
Figure: TN01/001	

Stantec

stantec.com/uk

Copyright reserved
The copyrights to all designs and drawings are the property of Stantec. Reproduction or use for any purpose other than that authorised by Stantec is forbidden.

Tel: 01189 500 761

Appendix D Material Import Criteria

Criteria For the Protection of Controlled Waters

1. All imported soils and/or aggregates (collectively the 'materials') shall be tested to ensure the concentrations of potential contaminants are below the limiting values given in the table below. In addition the limiting values for harm to human health must also be complied with.
2. Limiting values have been identified for the more frequently occurring potential contaminants, which is not an exhaustive list. The Contractor responsible for importing the materials shall review the list of identified potential contaminants in the context of the source of the materials prior to importation and identify limiting values for additional substances if appropriate. As a minimum, the imported materials should not generate a discernible concentration of any of the Priority Substances (chemicals as set out in the Water Framework Directive (WFD) and Environmental Quality Standards Directive (EQSD)).
3. The frequency of acceptability testing will be subject to the volume and proposed usage of the imported materials.
4. There may be occasions where the assumptions used to generate the limiting values (refer to the Notes following the table) are not sufficiently protective for the site specific situation being considered, in which case the derivation of site-specific acceptance criteria should be considered.

Parameter	Limiting Value	Notes
Metals/Anions		
Antimony	0.006 mg/L	Limit values for total concentration in eluate from leaching test using BS EN 12457 at L/S 10
Arsenic	0.03 mg/L	
Barium	2 mg/L	
Cadmium	0.0006 mg/L	
Chromium VI	0.007 mg/L	
Copper	0.005 mg/L	
Lead	0.0015 mg/L	
Mercury	0.000065 mg/L	
Molybdenum	0.05 mg/L	
Nickel	0.025 mg/L	
Selenium	0.01 mg/L	
Zinc	0.09 mg/L	
Chloride	80 mg/L	
Fluoride	1 mg/L	
Sulphate	100 mg/L	
Hydrocarbons		
Total BTEX	6 mg/kg	Limit values for total concentration in soil
Benzene	0.019 mg/kg	Limit values for total concentration in soil
	0.01 mg/L	Limit values for total concentration in eluate from leaching test using BS EN 12457 at L/S 10
Toluene	0.074	
Ethylbenzene	0.3	

Parameter	Limiting Value	Notes
Xylenes	0.003	Limit values for total concentration in eluate from leaching test using BS EN 12457 at L/S 10
Total TPH (C10-C40)	500 mg/kg	Limit values for total concentration in soil
Total PAHs (USEPA 16)	100 mg/kg	Limit values for total concentration in soil
Anthracene	0.0001 mg/L	Limit values for total concentration in eluate from leaching test using BS EN 12457 at L/S 10
Benzo(b)fluoranthene	0.000017 mg/L	
Benzo(a)pyrene	0.00000017 mg/L	
Benzo(k)fluoranthene	0.000017 mg/L	
Benzo(g,h,i)perylene	0.0000082 mg/L	
Indeno(1,2,3-cd)pyrene	0.0001 mg/L	
Fluoranthene	0.0000063 mg/L	
Naphthalene	0.002 mg/L	
Phenols		
Total phenols	1 mg/kg	Limit value for total concentration in soil
	0.0077 mg/L	Limit values for total concentration in eluate from leaching test using BS EN 12457 at L/S 10
General		
All	-	The soil should be free from metals, plastic, wood, glass, tarmac, paper and odours associated with contaminated soils.
Topsoil	-	BS 3882 Specification for Topsoil.
Subsoil	-	BS 8601 Specification for subsoil and requirements for use

Notes to table

This set of generic assumptions is intended to be conservative for the vast majority of situations where soil is re-used or imported to a site. These assumptions are listed below:

- The imported soil is emplaced as 1m thick (or less) compacted layers (excluding any subsoil or topsoil).
- After compaction, the imported material has a dry density within the range of 1700 to 2000 kg/m^3 (1.7 to 2.0g/cm^3) and a moisture content within the range 12 to 20%. These ranges are typical for compacted engineered soils.
- The soil organic matter content of the material is 1%, equivalent to a fraction of organic carbon (FOC) content of 0.58%.

Importation Criteria for the Protection of Human Health

1. All imported soils and/or aggregates (collectively the 'materials') shall be tested to ensure the concentrations of potential contaminants are below the limiting values given in the table below. In addition the limiting values for harm to human health must also be complied with.
2. Limiting values have been identified for the more frequently occurring potential contaminants, which is not an exhaustive list. The Contractor responsible for importing the materials shall review the list of identified potential contaminants in the context of the source of the materials prior to importation and identify limiting values for additional substances if appropriate
3. The frequency of acceptability testing will be subject to the volume and proposed usage of the imported materials.
4. There may be occasions where the assumptions used to generate the limiting values (refer to the Notes following the table) are not sufficiently protective for the site-specific situation being considered, in which case the derivation of site-specific acceptance criteria should be considered.
5. Where Topsoil and/or Subsoil are to be imported as part of the soft landscaping regime the requirements of both BS 3882 (Specification for Topsoil) and BS 8601 (Specification for subsoil and requirements for use) should be followed in conjunction with the limiting values provided.

Determinand	Limit Values (mg/kg)
Metals (Total Concentration unless otherwise specified)	
Arsenic *	79
Beryllium *	2.2
Cadmium #	120
Chromium *	1500
Chromium (Hexavalent) #	7.7
Copper *	1000[1,3]
Lead #	630
Mercury *	16
Nickel *	230
Selenium *	1,100
Vanadium *	2,000
Zinc	1000[1,3]
Petroleum Hydrocarbons (TPH)	
Aliphatics	
C5-C6	42[1,2]
C6-C8	100[1,2]
C8-C10	27[1,2]
C10-C12	130[1,2]
C12-C16	500[4]
C16-C21	500[4]
C21-C35	500[4]
Sum C5-C40	500[4]
Aromatics	
C5-C7	72[1]
C7-C8	100[4]
C8-C10	34[1]
C10-C12	74[1]
C12-C16	100[4]
C16-C21	100[4]
C21-C35	100[4]

Determinand	Limit Values (mg/kg)
Sum C5-C35	100[4]
PAH US EPA 16	
Acenaphthene	100[4]
Acenaphthylene	100[4]
Anthracene	100[4]
Benzo(a)anthracene	29*
Benzo(a)pyrene	5.7*
Benzo(b)fluoranthene	7.2*
Benzo(g,h,i)perylene	100[4]
Benzo(k)fluoranthene	190*
Chrysene	57*
Dibenzo(a,h)anthracene	0.57*
Fluoranthene	100[4]
Fluorene	100[4]
Indeno(1,2,3-cd)pyrene	82*
Naphthalene	100[4]
Phenanthrene	100[4]
Pyrene	100[4]
Other Hydrocarbons	
Benzene	72
Toluene	1000[1,3]
Ethylbenzene	1000[1,3]
Xylene (individual m-, o-, p- isomers)	1000[1,3]
General	
Asbestos	Absent
Composition	The soil should be free from metals, plastic, wood, glass, tarmac, paper and odours associated with contaminated soils.

Notes to table

* - Suitable 4 Use Levels (S4UL) - Residential with plant uptake (mg/kg) for soils with Soil Organic Matter (SOM) of 1%.

Category 4 Screening levels (C4SLs) - Residential with plant uptake (mg/kg) for soils with Soil Organic Matter (SOM) of 1%

[1] Value selected to limit concentration to below the threshold for classification as hazardous waste

[2] Value also subject to a maximum for the Sum of aliphatics to 1000mg/kg

[4] Value selected to limit the concentration to that for the protection of controlled waters.