# Sinnis Motorcycles, Sinnis House,

# Ocean View Business Park,
# Gardner Road, Southwick,
# West Sussex, BN41 1PL

## Drainage Strategy  Report

March  2025
Final

Issue No 1
56377

| | |
|---|---|
| **Project Title:** | Sinnis Motorcycles, Sinnis House, Ocean View Business Park, Southwick, West Sussex, BN41 1PL |
| **Report Title:** | Drainage Strategy Report |
| **Project No:** | 56377 |
| **Report Ref:** | |
| **Status:** | Final |
| **Client Contact Name:** | Ms. Lisa Jewell |
| **Client Company Name:** | Sinnis Motorcycles Limited |
| **Issued By:** | Dixon Hurst Limited<br>Heversham House<br>18-22 Boundary Road, Hove<br>East Sussex BN3 4EF<br>Tel (01273) 421444<br>Fax (01273 420008<br>Email: hove@dhk.co.uk<br>Website: www.dhk.co.uk |

**Document Production / Approval Record**

| Issue No: 1 | Name | Signature | Date | Position |
|---|---|---|---|---|
| Prepared by | Jethro Sifflet BEng (Hons) | | 20/03/25 | Senior Civil Engineer |
| Checked & Approved by | Philip Young BSc (Hons), CEng, MICE FIStructE | | 20/03/25 | Director |

**Document Revision Record**

| Issue No | Date | Details of Revisions |
|---|---|---|
| 1 | 21st March 2025 | First Issue |

**COPYRIGHT**

© This Report is the copyright of Dixon Hurst Kemp Ltd. Any unauthorised reproduction or usage by any person other than the addressee is strictly prohibited.

# CONTENTS

**Section** **Page No**

**1. INTRODUCTION ..... 1**

**2. DEVELOPMENT PROPOSAL ..... 1**

**3. REPORT AIMS AND OBJECTIVES ..... 1**

**4. PLANNING CONDITIONS ..... 1**

**5. SUMMARY OF DATA REVIEW UNDERTAKEN ..... 2**

**6. SITE SETTING ..... 3**

6.1. Site Description and Location ..... 3
6.2. Topography ..... 3
6.3. Existing Drainage/Sewers ..... 3

**7. GEOLOGY, HYDROGEOLOGY AND HYDROLOGY ..... 4**

7.1. Geology ..... 4

**8. PROPOSED DEVELOPMENT ..... 5**

**9. DRAINAGE STRATEGY ..... 6**

**10. DRAINAGE DESIGN ASSESSMENT ..... 6**

Existing Soakaway Contributing Catchment Area & Design Analysis ..... 7
Mitigation Measures ..... 8
Adoption/Maintenance ..... 8

**11. DISCUSSION AND CONCLUSIONS ..... 10**

Appendix A- Client Suppied Data

Appendix B- Drainage Design

## 1. INTRODUCTION

Dixon Hurst Limited have been appointed by Sinnis Motorcycles Limited to undertake a site Drainage Strategy for the new aluminium framed building at the Sinnis House, Ocean View Business Park site located at Gardner Road, Southwick , West Sussex, BN41 1PL.

## 2. DEVELOPMENT PROPOSAL

The Drainage Strategy is required to support a planning application to Adur Districk Council for the erection of a new aluminium framed building to the rear of the existing building for motorcycle storage.

Further details including drawings of the development plans are available in the Appendix.

## 3. REPORT AIMS AND OBJECTIVES

This report will address the concerns raised by the Adur District Council and provide details on the surface water drainage including Sustainable Urban Drainage System (SuDS) source control in order to reduce the surface water run-off leaving the site and show that the proposed development will not increase Flood Risk at the site or elsewhere.

## 4. PLANNING CONDITIONS

Adur District Council have imposed the following planning conditions, relating to surface water:

**Condition 1:** ***Construction shall not begin until a detailed surface water drainage scheme for the site has been submitted to and approved in writing by the Local Planning Authority. The surface water drainage scheme must prioritise the use of source control Sustainable Drainage Systems(SuDS) in consideration of the Non-Statutory Technical Standards for SuDS and demonstrate no increase in flood risk as a result of the Proposed Development with sufficient supporting evidence provided to support its viability including supporting calculations for the 1% AEP (1 in 100) plus climate change critical storm.***

**Condition 2:** ***The development hereby approved shall not be occupied until details of the maintenance and management of any proposed sustainable drainage scheme have been submitted to and approved in writing by the Local Planning Authority. The drainage scheme shall be implemented prior to the first occupation of the development hereby approved and thereafter managed and maintained in accordance with the approved details in perpetuity. The details of the scheme to be submitted for approval shall include:***

***I. Details of any SuDS features and connecting drainage structures, and maintenance requirements for each aspect including a drawing showing where they are located.***

***II. A management and maintenance plan for the lifetime of the development which shall include the name and contact details of any appointed management company.***

## 5. SUMMARY OF DATA REVIEW UNDERTAKEN

The following research has been undertaken as part of the FRA:

- Desktop assessment of topographical, hydrological and hydrogeological settings through review of the information sourced from the British Geological Survey (BGS), the Environment Agency (EA) and the Ordnance Survey (OS);
- Review of publicly available flood risk mapping provided by the EA;
- Review of the Preliminary Flood Risk Assessment (PFRA) and Level 1 Strategic Flood Risk Assessment (SFRA) produced by the LLFA outlining flood risk from various sources within the borough.
- National Planning Policy Framework (NPPF) &Technical Guidance to NPPF
- Proposed Site Layout
- Guidance on the Constructions of SuDS (Ciria C768)
- SuDS Manual (Ciria C753)
- Environment Agency Climate Change Allowances (December 2019);
- Non Statutory Technical Standards for SuDS (March 2015);
- Building Regulations Part H – Drainage and Waste Disposal (2015 Edition)

# 6. SITE SETTING

## 6.1. Site Description and Location

The site comprises a 7977m$^2$ irregularly shaped parcel of land located at Gardner Road between Fishergate Close & Eastbrook Way Southwick and is currently occupied by Sinnis House, Ocean View Business Park with a private site access road and parking area. The site deemed totally impermeable. The site is centred on National Grid Reference 525137,105256.

The site is bounded by residential properties to the, west & east. Gardener Road south and the railway line to the north. The site has a frontage of 92m and an overall depth of 86m.

The site location and layout is shown in Figures 1&2, below.

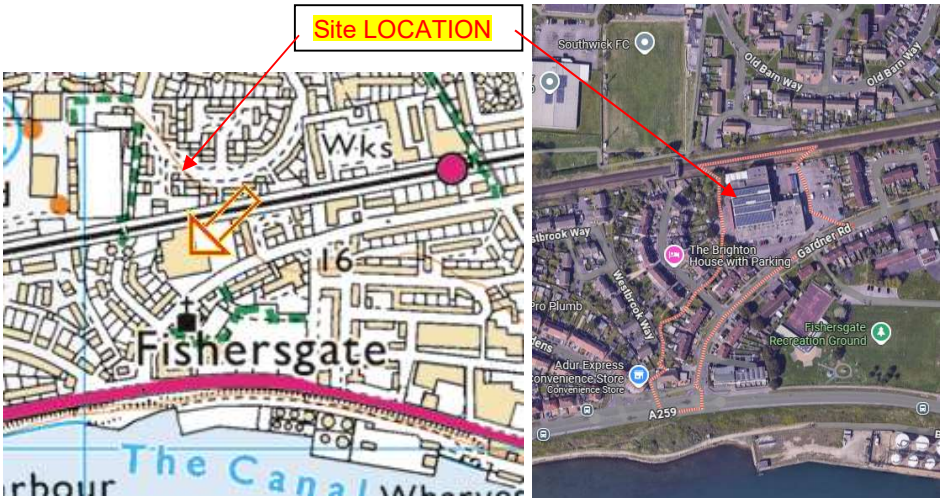


Figures 1 & 2–Site Location and Layout

## 6.2. Topography

The Topographical Survey undertaken of the site is included in Appendix A. The Survey shows that the site slopes gently from northeast to southwest t with average levels of 15.00 m AOD in the front to 14.00m AOD and appears to be well drained.

## 6.3. Existing Drainage/Sewers

The existing drainage system serving site consists of a separate conventional private gravity foul and surface water drainage system with the surface water discharging to soakaway within the site and the foul water connected to a public sewer in Gardener Road.

The site is totally impermeable with a surface area of approximately 7977m$^2$ and would result in the surface water discharge to the onsite soakaways in the order of 1469l/s l/s. based on a rainfall intensity of 68mm/hr for a 1 in 1 year return storm event of 5 minutes duration.

# 7. GEOLOGY, HYDROGEOLOGY AND HYDROLOGY

## 7.1. Geology

A review of the 1:50,000 geological survey maps indicates that the site is underlain by River Terrace Deposits over Tarrant Chalk formation.

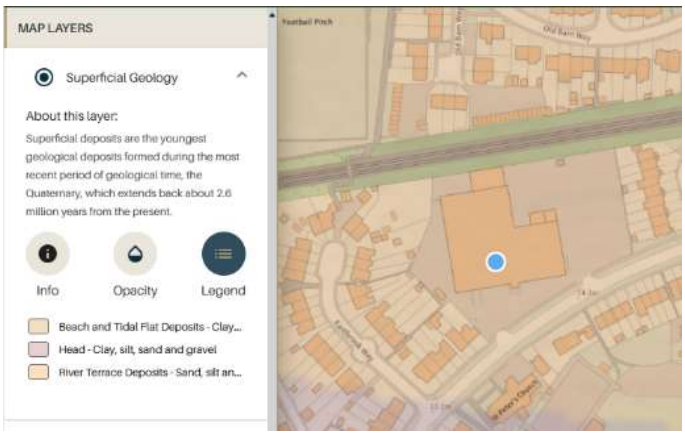


Figure 2- Superficial Geology at the site. (Source: British Geological Society Website

(Contains British Geological Survey materials © URKI [2021].

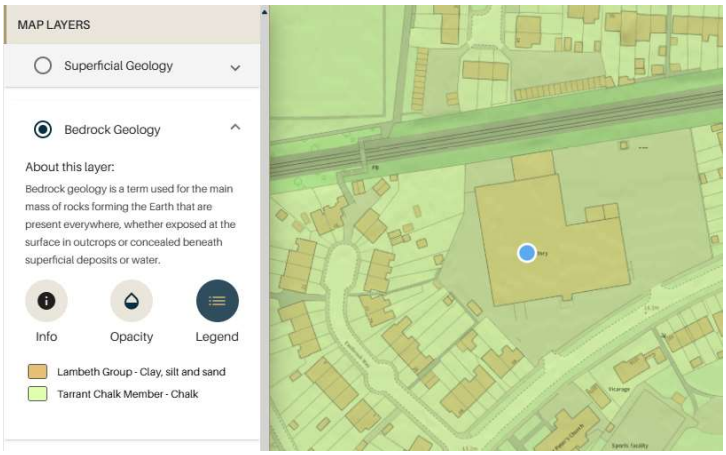


Figure 3- Bedrock Geology at the site. (Source: British Geological Society Website

(Contains British Geological Survey materials © URKI [2021].

## 8. PROPOSED DEVELOPMENT

The proposed development is based on the conceptual master plan by Inception Planning Limited as shown in Appendix A. It comprises erection of a 200m$^2$ aluminium framed storage building to rear of the existing building with dimensions of 20m long x 10m wide.

The proposed aluminium framed motorcycle storage building will be constructed over the existing area of hardstanding tarmac carpark and vehicle loading area.

The proposal would result will have a ***NIL*** effect in the total contributing surface area, surface water runoff and flood risk at the site.

**Table 2: Existing Site Impermeable Contributing Area Split**

| Post-Development Element | Contributing Area |
|---|---|
| Roof Areas | 2600.0 m$^2$ |
| Tarmac Hardstanding carpark Areas and walkways | 5377.0 m$^2$ |
| **Total** | **7977.0 m$^2$** |

**Table 3: Proposed Site Impermeable Contributing Area Split Comparison**

| Areas | Existing Area | Proposed Area |
|---|---|---|
| Roofs | 2600.0 m$^2$ | 2800.0 m$^2$ |
| Tarmac Hardstanding carpark Areas and walkways | 5377.0 m$^2$ | 5377.0 m$^2$ |
| **Total** | **7977.0 m$^2$** | **7977.0 m$^2$** |

## 9. DRAINAGE STRATEGY

The Intended strategy is to maintain the existing surface water Sustainable Urban Drainage System (SuDS) discharging to soakaway within the carpark area.

The roof area of new erected aluminium framed building will discharge via a conventional gravity pipe drainage system to the existing soakaways. The site drainage strategy layout is indicated on Dixon Hurst Limited Drawing No.56377-20 in Appendix.

The existing soakaway are assumed to be design to caters for the 1:100 year + 20% climate change event based on based on the age of the development. However, the updated climate change factor 45% will be assessed in line with the NPPF/EA requirements.

Surface water runoff arising from a new structure will be managed in a sustainable manner to mimic the surface water flows arising from the site prior to the development proposal, while not increasing the flood risk to the site itself and elsewhere, taking climate change into account.

## 10. DRAINAGE DESIGN ASSESSMENT

The following catchments hydraulic characteristics below have been used in determining the drainage design for the site and the relevant catchments characteristics maps for the site have been included below.

**Table 4: Catchment Hydraulic Characteristics**

| Characteristics | Values |
|---|---|
| Region | 6 |
| M5-60 | 20mm |
| ratio ( r) | 0.40 |
| Soil | 1 |
| SPR | 0.15 |
| SAAR | 700 mm |
| UCWI | 105 |
| IF | 0.75 |
| PF | 200 mm |
| Runoff Coefficient | 0.75 |

## Existing Soakaway Contributing Catchment Area & Design Analysis

### Soakaway & Catchment Area.

The location for the proposed for the erection of new aluminium framed storage building have a contributing catchment area of approximately 850m$^2$ discharging into the existing Soakaway Reference ESA5.

The soakaway ESA5 is a 2.1m diameter by 2.5m deep precast concrete ring soakaway.

The existing peak flow rate for 5 minute rainfall intensity and the 6hr runoff volume for the various return periods based on catchment area of 850m$^2$ are as follows:

**Table 5: Existing Soakaway Flow Rates and Runoff Volume for 1 in 100yr Storm event**

| Return Period | Peak Flow Rates | Peak Runoff Volume | Existing Soakaway Infiltration Rate | Existing Soakaway Inflow | Required Soakaway Volume |
|---|---|---|---|---|---|
| 1 Year | 11.97 l/s | 13.90m$^3$ | 1.53x 10$^{-3}$m/s | 7.70l/s | 0.60 m$^3$ |
| 30 Year | 28.67l/s | 32.90 m$^3$ | | 15.60l/s | 5.00 m$^3$ |
| 100 Year | 35.90 l/s | 40.00 m$^3$ | | 20.0l/s | 7.50 m$^3$ |

**Table 5: Existing Soakaway Flow Rates and Runoff Volume for 1 in 100yr Storm event plus 45% Climate Change**

| Return Period | Peak Flow Rates | Peak Runoff Volume | Existing Soakaway Infiltration Rate | Existing Soakaway Inflow | Required Soakaway Volume |
|---|---|---|---|---|---|
| 1 Year | 11.97 l/s | 13.90m$^3$ | 1.53x 10$^{-3}$m/s | 8.70l/s | 1.20 m$^3$ |
| 30 Year | 28.67l/s | 32.90 m$^3$ | | 18.50l/s | 6.70 m$^3$ |
| 100 Year | 35.90 l/s | 40.00 m$^3$ | | 23.90l/s | 9.60 m$^3$ |

The development proposal will new ***not*** result in an increase of the contributing catchment surface area, peak rate of surface water runoff or volume from the site. The existing soakaway will be adequate to manage the increase in the climate change factor from 20% to 45% without risk of flooding.

## Mitigation Measures

The proposed drainage system for the new aluminium framed storage building has been designed using good design practice to optimise and provide effective stormwater management for the 1 in 100 year (+45%) for a 6 hour duration storm event. In addition silt traps have been included prior to discharging to the existing soakaway.

The surface water drainage strategy in line with that existing at the site and, provides a robust, deliverable, and sustainable solution in flood risk terms and in relation to the requirements of the National Planning Policy Framework and local planning policies.

## Adoption/Maintenance

Long term ownership and maintenance responsibilities for all drainage devices will be secured prior to occupation. It is the responsibility of the developer to put in place suitable management arrangements for the SuDS for the lifetime of the development.

Regular inspection and maintenance is important for the effective operation of SuDS components as designed. The regular maintenance of the proposed SudS devices should be carried out in line with the CIRIA C753 The SUDS Manual or as per manufacturer's

**Table 9: Typical Pipe System Maintenance Requirements**

| Schedule | Maintenance Requirement | Frequency |
|---|---|---|
| Regular | Ensuring drainage intakes are clear of debris/silt. | Monthly (or as required). |
| Occasional | Jet clean sewer lines, to remove grease, grit, sediment and other debris to ensure conveyance capacity is not compromised. | Annually. |
| Intermittent | CCTV survey of sewer lines to identify any defects/signs of performance degradation such as:<br>• Cracked/deteriorating pipes;<br>• Leaking joints/seals at manholes;<br>• High water lines showing regular high stage in pipes (sign of lack of capacity or downstream constraint); and<br>• Suspected infiltration or exfiltration. | Every 2 – 5 years. |
| Remedial | Repair defects using suitable methods. Effective temporary repairs may be sufficient in short term until scheduled /capital improvements can be made. | As required. |
| Monitoring | Record areas of surface ponding/intake bypassing /surcharging (photos, inundated areas, depths) during extreme storm events and investigate the reasoning for this post storm. | As required. |

**Table 10: Maintenance Schedule for catchpits and Channels Drains**

| Schedule | Maintenance Requirement | Frequency |
|---|---|---|
| Regular | • Inspect for accumulation of silt<br>• Inspect for debris and litter<br>• Inspect inlets and outlets for blockages | Every six months |
| Occasional | • Remove debris and litter<br>• Remove silt | As required. |
| Remedial | • Repair or replace | As required. |

**Table 11: Typical Soakaway Maintenance Requirements**

| Schedule | Maintenance Requirement | Frequency |
|---|---|---|
| Regular | Inspect and identify any areas that are not operating correctly. If required, take remedial action.<br><br>Debris removal from catchment surface (where may cause risks to performance). | Monthly for first 3 months, 6 monthly thereafter.<br><br>Monthly. |
| Occasional | Remove sediment from pre-treatment structures. | Annually (or as required). |
| Remedial | Repair/rehabilitation of inlets, outlet, overflows and vents. | As required. |
| Monitoring | Inspect/check all inlets, outlets, vents and overflows to ensure that they are in good condition and operating as designed. | Annually and after large storms. |

# 11. DISCUSSION AND CONCLUSIONS

The drainage proposal for the new aluminium framed storage building is in line with the existing site drainage strategy discharging to soakaways in accordance with the principals of Sustainable Urban Drainage Systems (SuDS).

Climate change has been taken into account in the assessment of the design of the surface water drainage from the new aluminium framed storage building discharging to the existing soakaway based on a 45% increase in rainfall intensities, which is in accordance with Table 5 B2 of NPPF for a development life span of 100 years.

The site is located within Flood Zone 1 and is considered to be at a low risk of flooding from rivers or sea.

The site is not at flood risks from other sources such as sewers, ditches, overland flow, groundwater and artificial sources.

We therefore conclude that the development proposal can suitably be accommodated without increasing flood risks within the site or the locality. The development proposal meets with the requirement set by the NPPF and the EA and should be considered acceptable in terms of surface water drainage and flood risk grounds.

# Appendix A- Client Suppied Data

## NOTES

NUMBERS IN BLUE ARE THE DISTANCE(mm) BELOW 0mm DATUM.

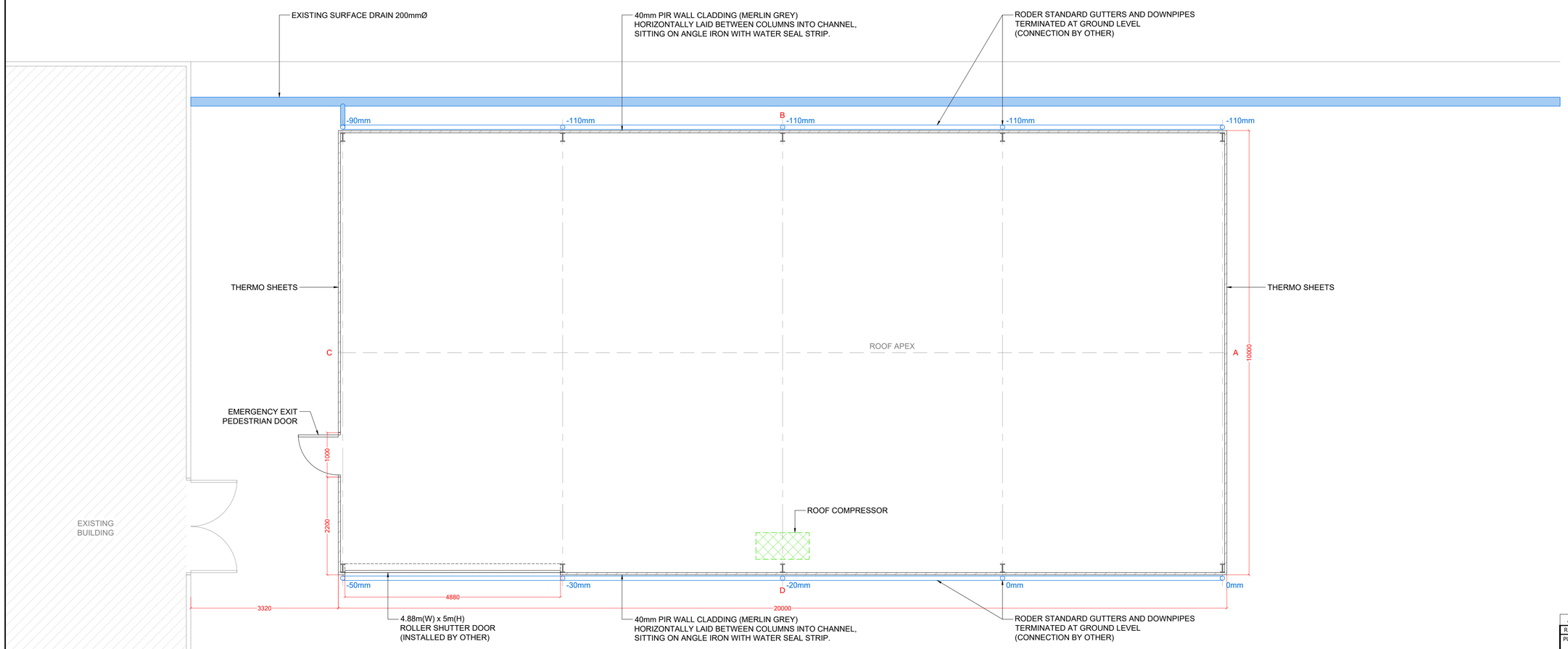


**PLAN**

0m 1m 2m 3m 4m 5m

100mm
50mm

PRINT ACCURACY INDICATOR 50mm 100mm

| REV | DATE | REVISION | MADE | CHK | APP |
|---|---|---|---|---|---|
| A | 20.11.2024 | FIRST ISSUE | GTB | JS | JS |

PURPOSE OF ISSUE

STATUS

SUITABLE FOR


Clear Span Buildings Ltd
The Grange
Llandrinio
Llanymynech
Powys
SY22 6SG


PROJECT

SINNIS MOTORCYCLES
OCEAN VIEW BUSINESS PARK
SOUTHWICK. BN41 1PL

DRAWING TITLE

PROPOSED PLAN

| SCALE | DRAWN/DESIGN | CSL REF | REVISION |
|---|---|---|---|
| 1:50 @A1 | GTB/JS | XXXX | A |

| PROJECT | ORIGINATOR | VOLUME/ SYSTEM | LEVELS & LOCATIONS | TYPE | ROLE | NUMBER |
|---|---|---|---|---|---|---|
| XXX- | CSL - | ZZ - | XX - | DR- | S - | 001 |

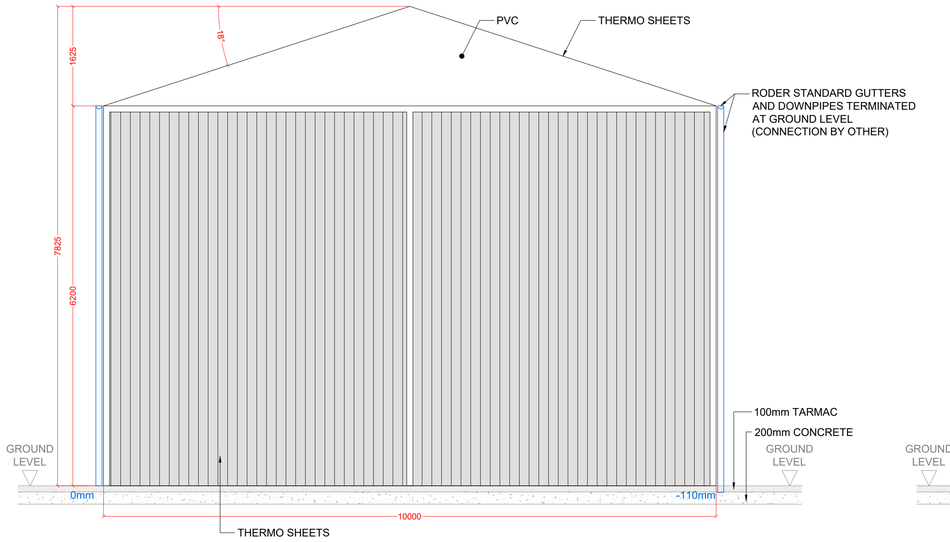


**ELEVATION A**

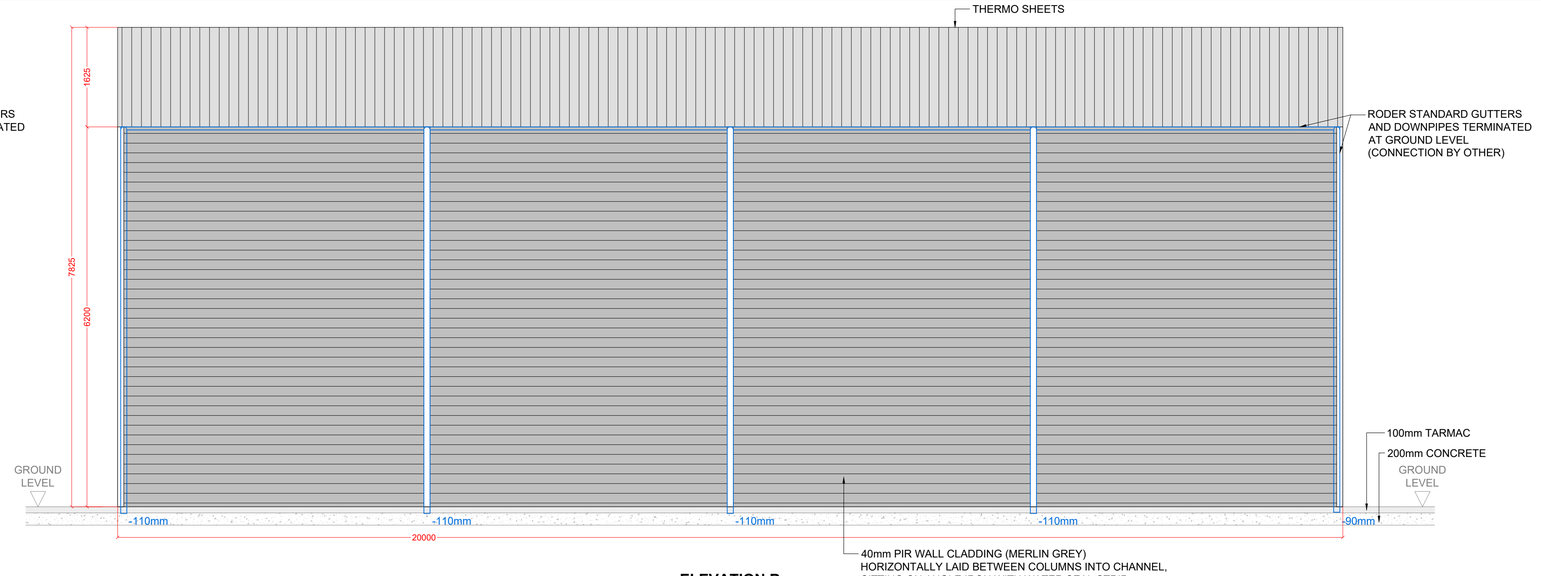


**ELEVATION B**




**ELEVATION C**




**ELEVATION D**

## NOTES

NUMBERS IN BLUE ARE THE DISTANCE(mm) BELOW 0mm DATUM.

GROUND FIXINGS OF 300mm X M16 THREADED ROD AND CHEMICAL FIXING.
DRILL THROUGH 100MM TARMAC AND 150MM INTO CONCRETE.

100mm
50mm
PRINT ACCURACY INDICATOR 50mm 100mm

0m 1m 2m 3m 4m 5m

| REV | DATE | REVISION | MADE | CHK | APP |
|---|---|---|---|---|---|
| B | 29.11.2024 | AMENDMENTS TO GABLE | GTB | PL | JS |
| A | 20.11.2024 | FIRST ISSUE | GTB | JS | JS |

PURPOSE OF ISSUE

| STATUS | SUITABLE FOR |
|---|---|
| | |

Clear Span Buildings Ltd
The Grange
Llandrinio
Llanymynech
Powys
SY22 6SG

PROJECT

SINNIS MOTORCYCLES
OCEAN VIEW BUSINESS PARK
SOUTHWICK. BN41 1PL

DRAWING TITLE

PROPOSED ELEVATIONS

| SCALE | DRAWN/DESIGN | CSL REF | REVISION |
|---|---|---|---|
| 1:50 @A1 | GTB/JS | XXXX | B |

| PROJECT | ORIGINATOR | VOLUME/ SYSTEM | LEVELS & LOCATIONS | TYPE | ROLE | NUMBER |
|---|---|---|---|---|---|---|
| XXX- | CSL - | ZZ - | XX - | DR- | S - | 002 |

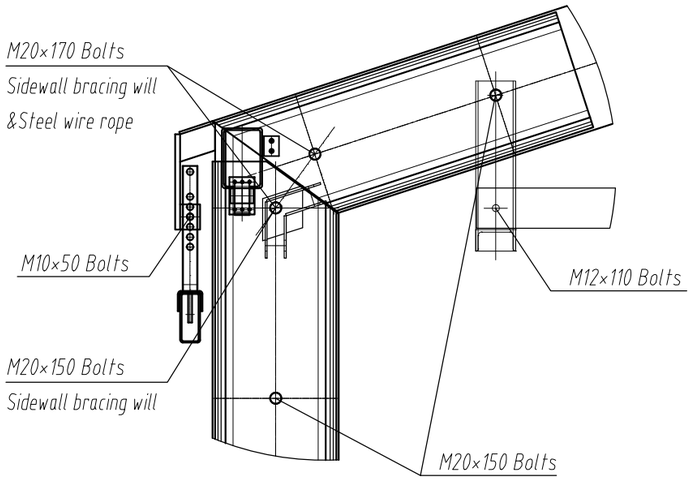
M20×170 Bolts
Sidewall bracing will
&Steel wire rope
M10×50 Bolts
M12×110 Bolts
M20×150 Bolts
Sidewall bracing will
M20×150 Bolts

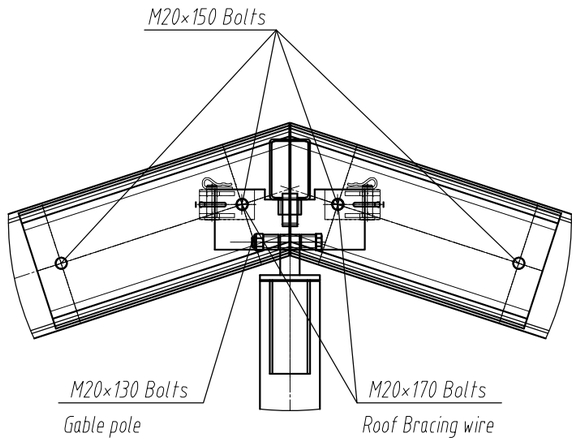
M20×150 Bolts
M20×130 Bolts
Gable pole
M20×170 Bolts
Roof Bracing wire

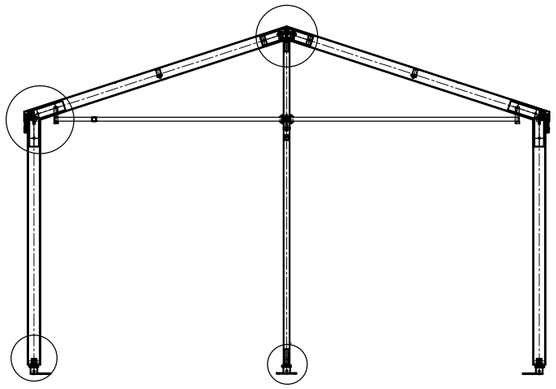

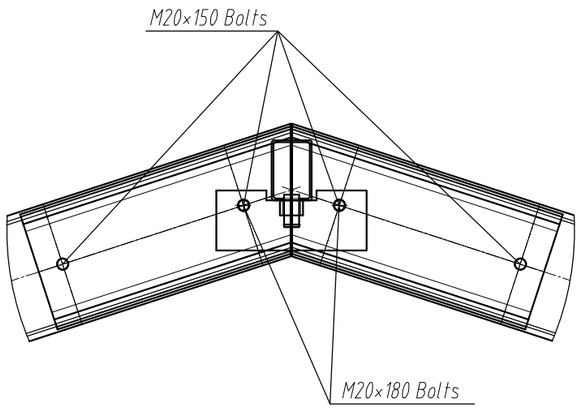
M20×150 Bolts
M20×180 Bolts

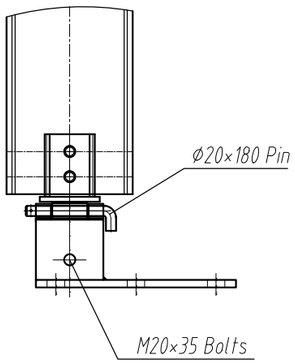
Ø20×180 Pin
M20×35 Bolts

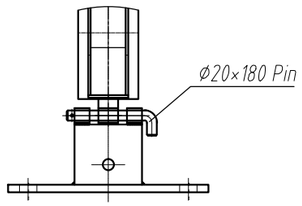
Ø20×180 Pin

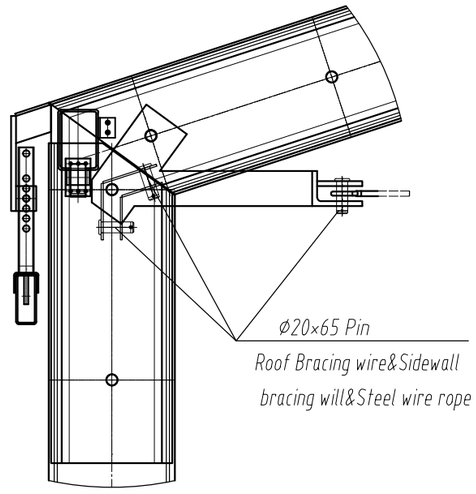
Ø20×65 Pin
Roof Bracing wire&Sidewall
bracing will&Steel wire rope

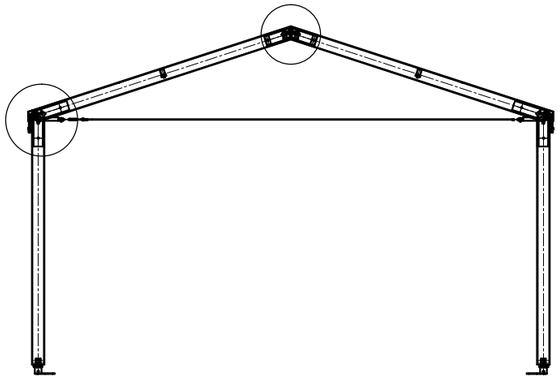

# Appendix B- Drainage Design

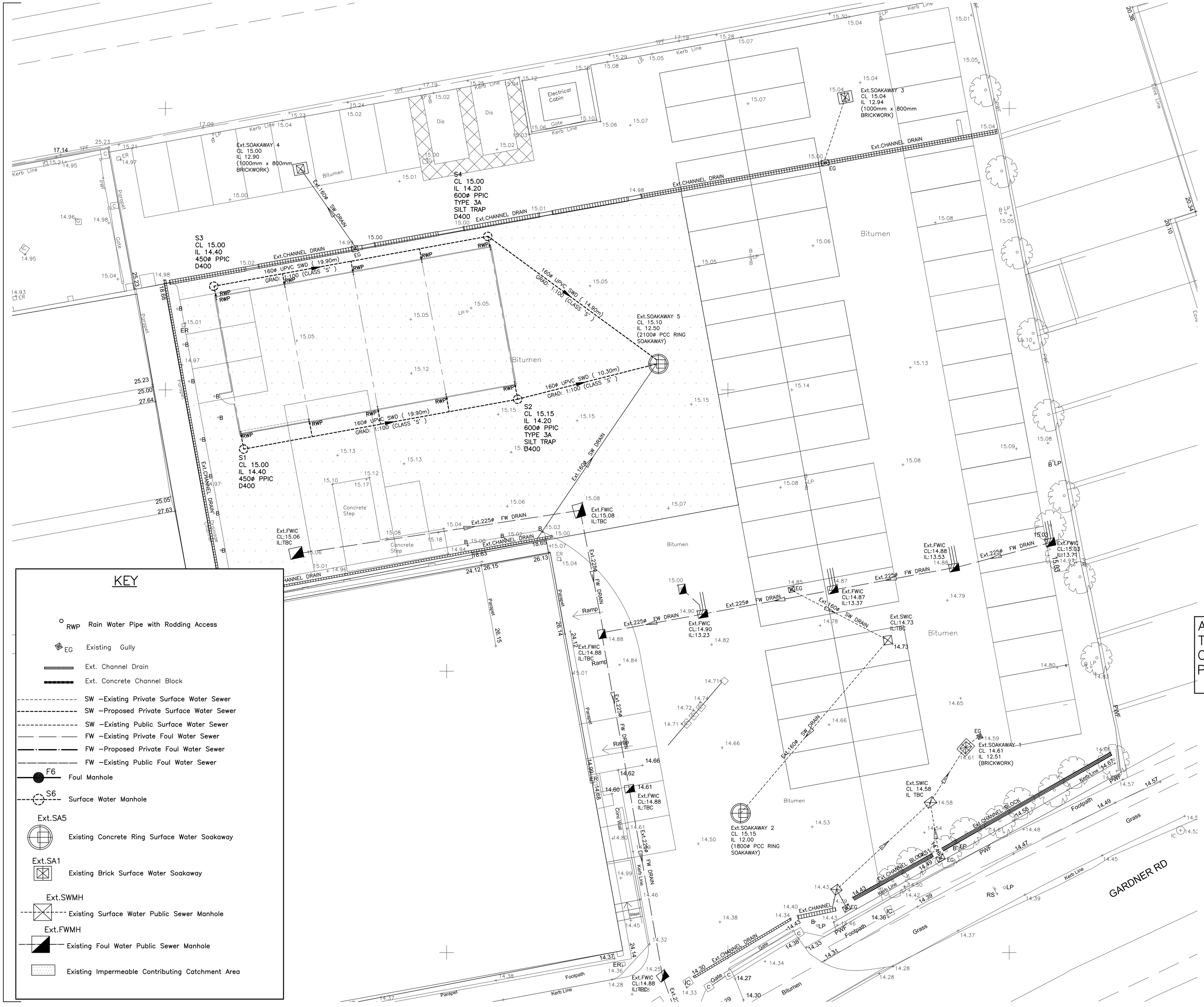


## KEY

- RWP Rain Water Pipe with Rodding Access
- EG Existing Gully
- Ext. Channel Drain
- Ext. Concrete Channel Block
- SW –Existing Private Surface Water Sewer
- SW –Proposed Private Surface Water Sewer
- SW –Existing Public Surface Water Sewer
- FW –Existing Private Foul Water Sewer
- FW –Proposed Private Foul Water Sewer
- FW –Existing Public Foul Water Sewer
- F6 Foul Manhole
- S6 Surface Water Manhole
- Ext.SA5 Existing Concrete Ring Surface Water Soakaway
- Ext.SA1 Existing Brick Surface Water Soakaway
- Ext.SWMH Existing Surface Water Public Sewer Manhole
- Ext.FWMH Existing Foul Water Public Sewer Manhole
- Existing Impermeable Contributing Catchment Area

In addition to these notes, reference shall be made to the specification of works and the relevant Architect's and Specialist's drawings and specifications.

The Contractor is responsible for verifying all site dimensions before commencing work.

All dimensions are in millimetres unless noted otherwise.

This drawing has been produced electronically and may have been photo reduced or enlarged when printed or copied. Dimensions on this drawing shall not be scaled. Work only to figured dimensions. Any dimensional discrepancies errors or omissions are to be reported to the engineer immediately.

Levels are in metres unless noted otherwise to Ordnance Survey datum.

The Contractor is responsible for the stability of the building whilst the works are in progress.

## NOTES

1. THIS DRAWING IS BASED ON DRAWING NO. JO–776–PL–02A BY INCEPTION PLANNING LIMITED.
2. THIS DRAWING IS TO BE READ IN CONJUNCTION WITH THE FOLLOWING DRAWING:

   56377/21 DRAINAGE DETAILS
3. CONTRACTOR IS TO TAKE NECESSARY PRECAUTIONS TO ENSURE THAT TRENCHES ARE KEPT CLEAR OF GROUND WATER DURING CONSTRUCTION.
4. ALL DRAINAGE WORKS TO BE CARRIED OUT IN ACCORDANCE WITH "SEWERS FOR ADOPTION" 7TH EDITION.
5. ALL ADOPTED PIPEWORK TO BE 100ø VITRIFIED CLAY UNLESS NOTED OTHERWISE.
6. ALL PIPEWORK THROUGH WALLS TO BE IN ACCORDANCE WITH THE BUILDING REGULATIONS.
7. ALL PIPEWORK UNDER ROADS WITH LESS THAN 900MM COVER TO HAVE 150MM CONCRETE SURROUND.
8. MINIMUM GRADIENT TO DRAINS TO BE 1:80 FOR 110ø OR 110ø FW AND 1:100 FOR 110ø SW.
9. POSITIONS OF MANHOLES SHOWN ON THIS DRAWING ARE INDICATIVE ONLY. ACTUAL LOCATIONS TO BE FINALIZED ON SITE.
10. PROVIDE CONCRETE LINTELS OVER OPENINGS WHERE PIPES PASS THROUGH WALLS. ALLOW FOR 150MM CLEARANCE ALL ROUND PIPE.

ALL DIMENSIONS AND LEVELS TO BE CHECKED AND CONFIRMED BY THE ARCHITECT PRIOR TO CONSTRUCTION.

| REV | DESCRIPTION | DATE | BY |
|---|---|---|---|
| 0 | ORIGINAL ISSUE | 20/03/25 | JS |


DIXON HURST
CONSULTING CIVIL & STRUCTURAL ENGINEERS
HEVERSHAM HOUSE, 18–22 BOUNDARY ROAD, HOVE, BN3 4EF
T: (01273) 421444 F: (01273) 420008 E: hove@dhk.co.uk
www.dhk.uk
Registered in England No. 3438720 – Registered Office 4 Frederick Terrace, Brighton BN1 1AX.


CONTRACT
**OCEAN VIEW BUSINESS PARK**
**GARDNER ROAD**
**SOUTHWICK, EAST SUSSEX**

DRAWING
**DRAINAGE LAYOUT**

| DRAWING No. | REV | CHECKED |
|---|---|---|
| 56377 / 20 | 0 | |
| SCALE 1:125@ A1 | DATE MAR 25 | DRAWN JS |
| AutoCAD Ref: 56377–10.dwg | | APPROVED |

This drawing is produced using Autocad: Only written dimensions are to be respected

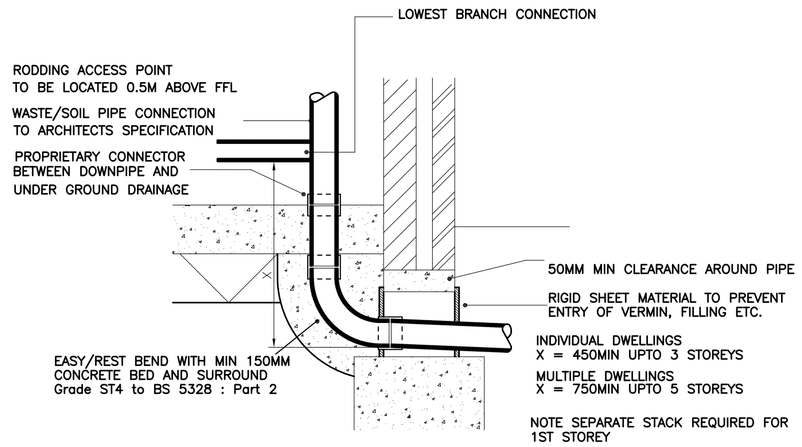


## TYPICAL SOIL VENT PIPE DETAILS

SCALE 1:20

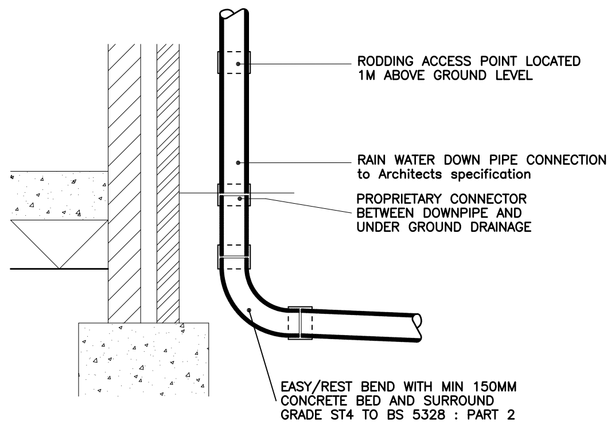


## TYPICAL RAIN WATER DOWNPIPE DETAIL

SCALE 1:20

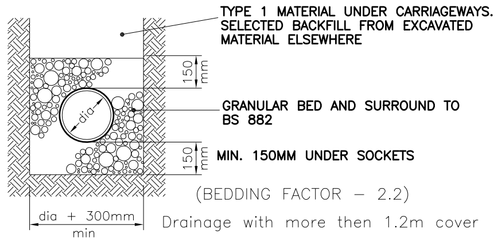


### TYPE 'S'

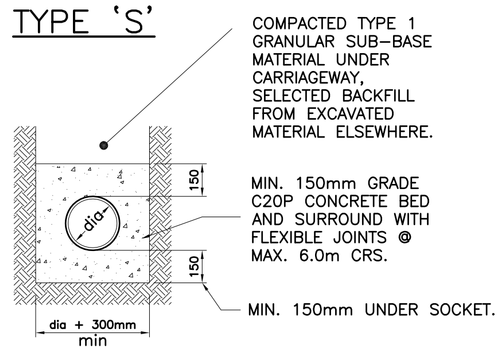


## CONCRETE PIPE BEDDING
## PIPE BEDDING DETAIL

SCALE 1:20

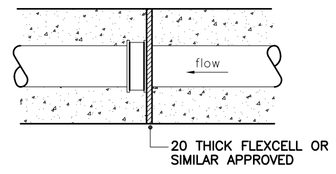


FLEXIBLE JOINT DETAIL
For Sleeved Pipes

## TYPICAL PIPE JOINTING DETAIL

SCALE 1:20

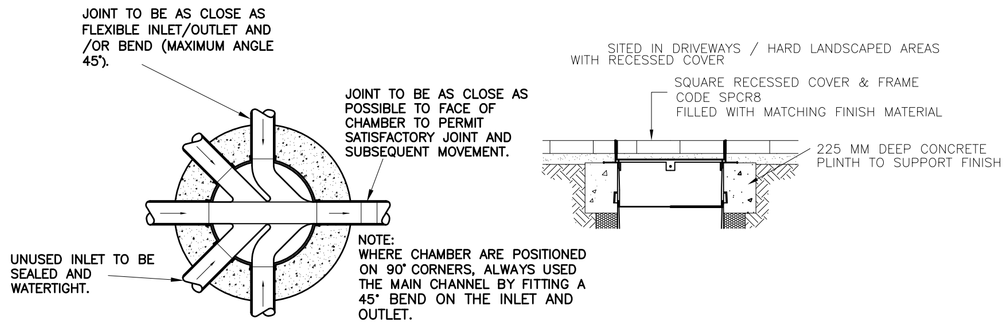


## PLAN




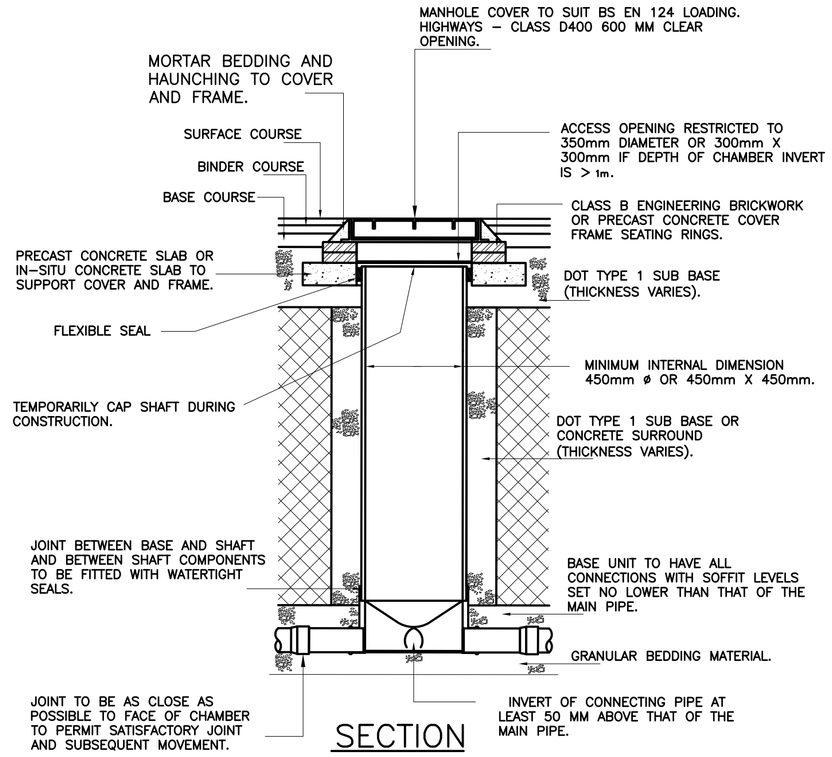


## SECTION

## TYPE 3 - 450P POLYPROPYLENE INSPECTION CHAMBER (MAX. DEPTH 3.0M TO PIPE SOFFIT).

SCALE 1:20

NOTE: PLASTIC CHAMBERS AND RING SHALL COMPLY WITH BS EN 13598-1 AND BS EN 13598-2 OR HAVE EQUIVALENT INDEPENDENT APPROVAL.

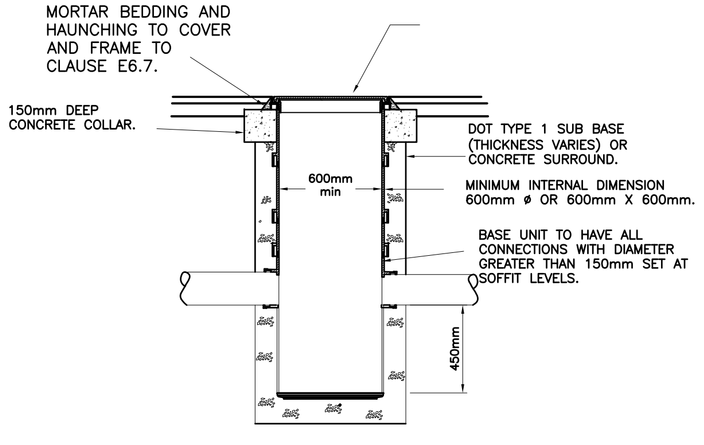


## TYPE 3A-600P POLYPROPYLENE SILT TRAP INSPECTION CHAMBER.

SCALE 1:20

In addition to these notes, reference shall be made to the specification of works and the relevant Architect's and Specialist's drawings and specifications.

The Contractor is responsible for verifying all site dimensions before commencing work.

All dimensions are in millimetres unless noted otherwise.

This drawing has been produced electronically and may have been photo reduced or enlarged when printed or copied. Dimensions on this drawing shall not be scaled. Work only to figured dimensions. Any dimensional discrepancies errors or omissions are to be reported to the engineer immediately.

Levels are in metres unless noted otherwise to Ordnance Survey datum.

The Contractor is responsible for the stability of the building whilst the works are in progress.

### NOTES

1. THIS DRAWING IS BASED ON DRAWING NO. JO-776-PL-02A BY INCEPTION PLANNING LIMITED.
2. THIS DRAWING IS TO BE READ IN CONJUNCTION WITH THE FOLLOWING DRAWING:

   56377/20 DRAINAGE LAYOUT
3. CONTRACTOR IS TO TAKE NECESSARY PRECAUTIONS TO ENSURE THAT TRENCHES ARE KEPT CLEAR OF GROUND WATER DURING CONSTRUCTION.
4. ALL DRAINAGE WORKS TO BE CARRIED OUT IN ACCORDANCE WITH "SEWERS FOR ADOPTION" 7TH EDITION.
5. ALL ADOPTED PIPEWORK TO BE 100ø VITRIFIED CLAY UNLESS NOTED OTHERWISE.
6. ALL PIPEWORK THROUGH WALLS TO BE IN ACCORDANCE WITH THE BUILDING REGULATIONS.
7. ALL PIPEWORK UNDER ROADS WITH LESS THAN 900MM COVER TO HAVE 150MM CONCRETE SURROUND.
8. MINIMUM GRADIENT TO DRAINS TO BE 1:80 FOR 110ø OR 110ø FW AND 1:100 FOR 110ø SW.
9. POSITIONS OF MANHOLES SHOWN ON THIS DRAWING ARE INDICATIVE ONLY. ACTUAL LOCATIONS TO BE FINALIZED ON SITE.
10. PROVIDE CONCRETE LINTELS OVER OPENINGS WHERE PIPES PASS THROUGH WALLS. ALLOW FOR 150MM CLEARANCE ALL ROUND PIPE.

ALL DIMENSIONS AND LEVELS TO BE CHECKED AND CONFIRMED BY THE ARCHITECT PRIOR TO CONSTRUCTION.

| REV | DESCRIPTION | DATE | BY |
|---|---|---|---|
| 0 | ORIGINAL ISSUE | 20/03/25 | JS |

DIXON HURST
CONSULTING CIVIL & STRUCTURAL ENGINEERS
HEVERSHAM HOUSE, 18-22 BOUNDARY ROAD, HOVE, BN3 4EF
T: (01273) 421444 F: (01273) 420008 E: hove@dhk.co.uk
www.dhk.co.uk
Registered in England No. 3438720 - Registered Office 4 Frederick Terrace, Brighton BN1 1AX.

CONTRACT
**OCEAN VIEW BUSINESS PARK**
**GARDNER ROAD**
**SOUTHWICK, EAST SUSSEX**

DRAWING
**DRAINAGE DETAILS**

| DRAWING No. | REV | CHECKED |
|---|---|---|
| 56377 / 21 | 0 | |
| SCALE 1:20@ A1 | DATE MAR 25 | DRAWN JS / APPROVED |
| AutoCAD Ref: 56377-10.dwg | | |

This drawing is produced using Autocad: Only written dimensions are to be respected

Summary of Results for 1 year Return Period (+20%)

Half Drain Time : 1 minutes.

| Storm Event | Max Level (m) | Max Depth (m) | Max Infiltration (l/s) | Max Volume (m³) | Status |
|---|---|---|---|---|---|
| 15 min Summer | 12.563 | 0.063 | 7.2 | 0.3 | O K |
| 30 min Summer | 12.585 | 0.085 | 7.4 | 0.4 | O K |
| 60 min Summer | 12.560 | 0.060 | 7.1 | 0.3 | O K |
| 120 min Summer | 12.541 | 0.041 | 5.7 | 0.2 | O K |
| 180 min Summer | 12.534 | 0.034 | 4.8 | 0.2 | O K |
| 240 min Summer | 12.529 | 0.029 | 4.1 | 0.1 | O K |
| 360 min Summer | 12.523 | 0.023 | 3.2 | 0.1 | O K |
| 480 min Summer | 12.519 | 0.019 | 2.6 | 0.1 | O K |
| 600 min Summer | 12.516 | 0.016 | 2.3 | 0.1 | O K |
| 720 min Summer | 12.515 | 0.015 | 2.1 | 0.1 | O K |
| 960 min Summer | 12.512 | 0.012 | 1.7 | 0.1 | O K |
| 1440 min Summer | 12.509 | 0.009 | 1.3 | 0.0 | O K |
| 2160 min Summer | 12.507 | 0.007 | 1.0 | 0.0 | O K |
| 2880 min Summer | 12.506 | 0.006 | 0.9 | 0.0 | O K |
| 4320 min Summer | 12.505 | 0.005 | 0.7 | 0.0 | O K |
| 5760 min Summer | 12.504 | 0.004 | 0.5 | 0.0 | O K |
| 7200 min Summer | 12.503 | 0.003 | 0.5 | 0.0 | O K |
| 8640 min Summer | 12.503 | 0.003 | 0.5 | 0.0 | O K |
| 10080 min Summer | 12.503 | 0.003 | 0.5 | 0.0 | O K |
| 15 min Winter | 12.611 | 0.111 | 7.6 | 0.6 | O K |
| 30 min Winter | 12.617 | 0.117 | 7.7 | 0.6 | O K |
| 60 min Winter | 12.549 | 0.049 | 6.9 | 0.2 | O K |
| 120 min Winter | 12.534 | 0.034 | 4.8 | 0.2 | O K |
| 180 min Winter | 12.527 | 0.027 | 3.8 | 0.1 | O K |

| Storm Event | Rain (mm/hr) | Time-Peak (mins) |
|---|---|---|
| 15 min Summer | 36.133 | 16 |
| 30 min Summer | 24.063 | 24 |
| 60 min Summer | 15.620 | 38 |
| 120 min Summer | 9.957 | 68 |
| 180 min Summer | 7.622 | 96 |
| 240 min Summer | 6.287 | 126 |
| 360 min Summer | 4.755 | 188 |
| 480 min Summer | 3.899 | 248 |
| 600 min Summer | 3.344 | 308 |
| 720 min Summer | 2.949 | 370 |
| 960 min Summer | 2.420 | 486 |
| 1440 min Summer | 1.831 | 728 |
| 2160 min Summer | 1.384 | 1080 |
| 2880 min Summer | 1.135 | 1432 |
| 4320 min Summer | 0.859 | 2160 |
| 5760 min Summer | 0.706 | 2936 |
| 7200 min Summer | 0.604 | 3736 |
| 8640 min Summer | 0.531 | 4376 |
| 10080 min Summer | 0.477 | 4984 |
| 15 min Winter | 36.133 | 17 |
| 30 min Winter | 24.063 | 24 |
| 60 min Winter | 15.620 | 36 |
| 120 min Winter | 9.957 | 66 |
| 180 min Winter | 7.622 | 98 |

©1982-2011 Micro Drainage Ltd

Summary of Results for 1 year Return Period (+20%)

| Storm Event | Max Level (m) | Max Depth (m) | Max Infiltration (l/s) | Max Volume (m³) | Status |
|---|---|---|---|---|---|
| 240 min Winter | 12.522 | 0.022 | 3.1 | 0.1 | O K |
| 360 min Winter | 12.517 | 0.017 | 2.4 | 0.1 | O K |
| 480 min Winter | 12.514 | 0.014 | 2.0 | 0.1 | O K |
| 600 min Winter | 12.512 | 0.012 | 1.7 | 0.1 | O K |
| 720 min Winter | 12.511 | 0.011 | 1.5 | 0.1 | O K |
| 960 min Winter | 12.509 | 0.009 | 1.2 | 0.0 | O K |
| 1440 min Winter | 12.507 | 0.007 | 1.0 | 0.0 | O K |
| 2160 min Winter | 12.505 | 0.005 | 0.7 | 0.0 | O K |
| 2880 min Winter | 12.504 | 0.004 | 0.6 | 0.0 | O K |
| 4320 min Winter | 12.503 | 0.003 | 0.5 | 0.0 | O K |
| 5760 min Winter | 12.503 | 0.003 | 0.5 | 0.0 | O K |
| 7200 min Winter | 12.503 | 0.003 | 0.4 | 0.0 | O K |
| 8640 min Winter | 12.503 | 0.003 | 0.4 | 0.0 | O K |
| 10080 min Winter | 12.503 | 0.003 | 0.4 | 0.0 | O K |

| Storm Event | Rain (mm/hr) | Time-Peak (mins) |
|---|---|---|
| 240 min Winter | 6.287 | 128 |
| 360 min Winter | 4.755 | 190 |
| 480 min Winter | 3.899 | 244 |
| 600 min Winter | 3.344 | 304 |
| 720 min Winter | 2.949 | 360 |
| 960 min Winter | 2.420 | 484 |
| 1440 min Winter | 1.831 | 686 |
| 2160 min Winter | 1.384 | 1068 |
| 2880 min Winter | 1.135 | 1532 |
| 4320 min Winter | 0.859 | 2024 |
| 5760 min Winter | 0.706 | 2848 |
| 7200 min Winter | 0.604 | 3696 |
| 8640 min Winter | 0.531 | 3776 |
| 10080 min Winter | 0.477 | 4600 |

©1982-2011 Micro Drainage Ltd

## Rainfall Details

| | | | |
|---|---|---|---|
| Rainfall Model | FSR | Winter Storms | Yes |
| Return Period (years) | 1 | Cv (Summer) | 0.750 |
| Region | England and Wales | Cv (Winter) | 0.840 |
| M5-60 (mm) | 20.300 | Shortest Storm (mins) | 15 |
| Ratio R | 0.350 | Longest Storm (mins) | 10080 |
| Summer Storms | Yes | Climate Change % | +20 |

## Time / Area Diagram

Total Area (ha) 0.085

| Time (mins) | Area (ha) | Time (mins) | Area (ha) | Time (mins) | Area (ha) |
|---|---|---|---|---|---|
| 0-4 | 0.028 | 4-8 | 0.028 | 8-12 | 0.029 |

©1982-2011 Micro Drainage Ltd

## Model Details

Storage is Online Cover Level (m) 15.100

## Lined Soakaway Structure

| | | | |
|---|---|---|---|
| Infiltration Coefficient Base (m/hr) | 5.50000 | Ring Diameter (m) | 2.10 |
| Infiltration Coefficient Side (m/hr) | 5.50000 | Pit Multiplier | 1.4 |
| Safety Factor | 2.0 | Number Required | 1 |
| Porosity | 0.30 | Cap Volume Depth (m) | 2.000 |
| Invert Level (m) | 12.500 | Cap Infiltration Depth (m) | 2.000 |

©1982-2011 Micro Drainage Ltd

Event: 30 min Winter

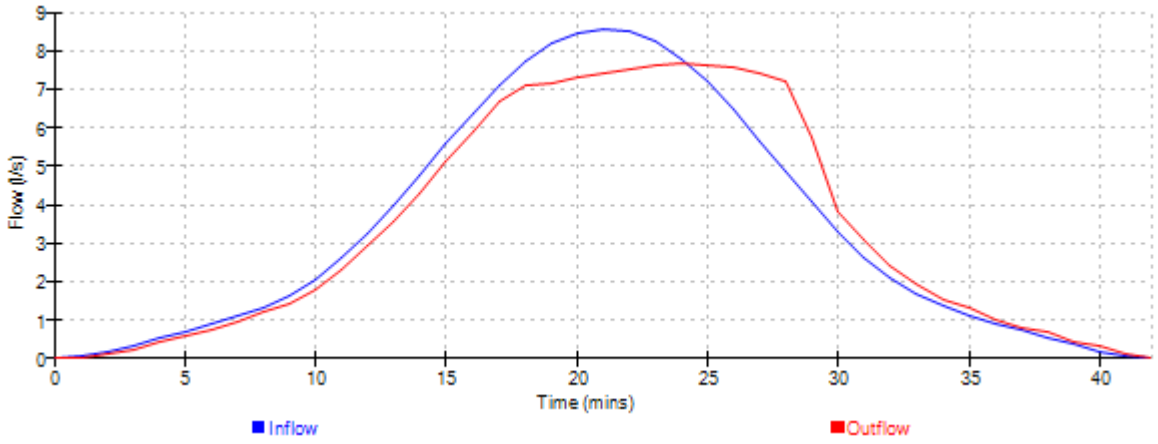


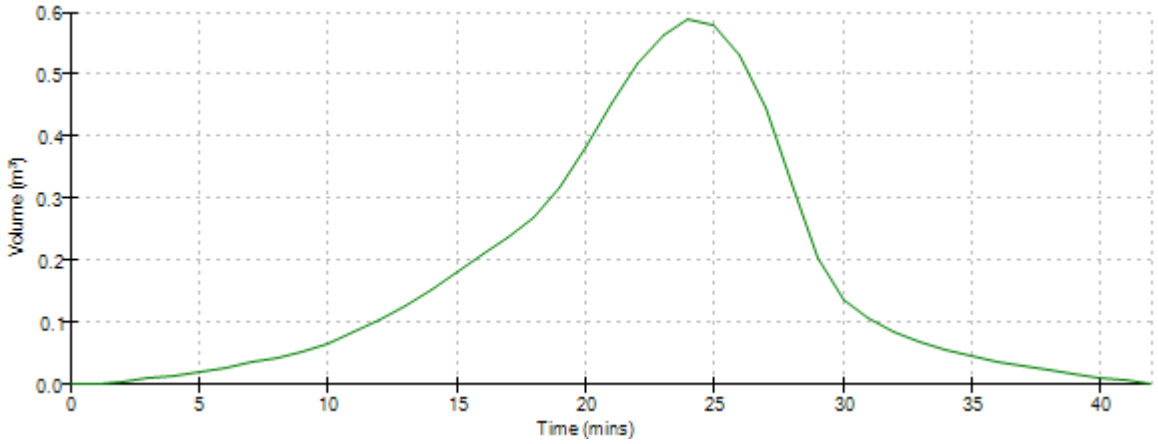


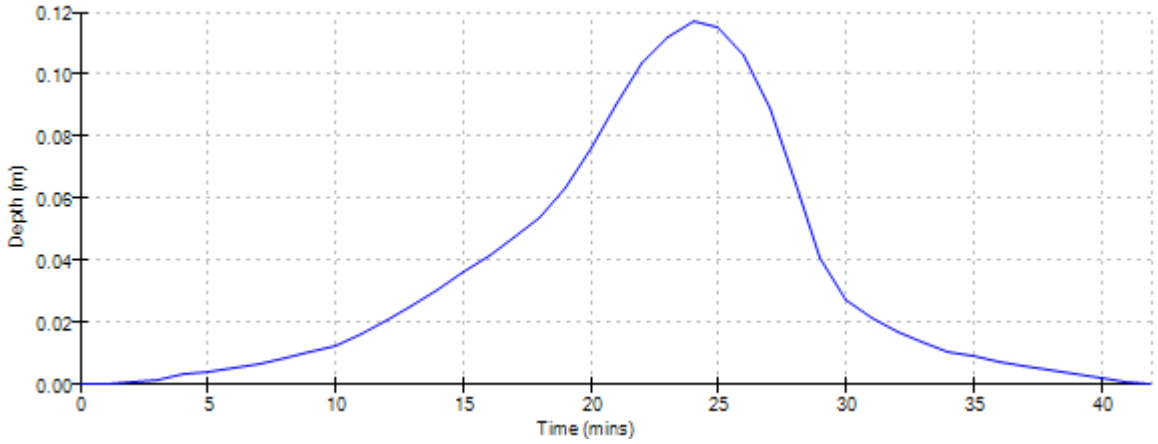


©1982-2011 Micro Drainage Ltd

## Summary of Results for 30 year Return Period (+20%)

Half Drain Time : 4 minutes.

| Storm Event | Max Level (m) | Max Depth (m) | Max Infiltration (l/s) | Max Volume (m³) | Status |
|---|---|---|---|---|---|
| 15 min Summer | 13.297 | 0.797 | 13.8 | 4.0 | O K |
| 30 min Summer | 13.394 | 0.894 | 14.6 | 4.5 | O K |
| 60 min Summer | 13.289 | 0.789 | 13.7 | 4.0 | O K |
| 120 min Summer | 13.030 | 0.530 | 11.4 | 2.7 | O K |
| 180 min Summer | 12.830 | 0.330 | 9.6 | 1.7 | O K |
| 240 min Summer | 12.690 | 0.190 | 8.3 | 1.0 | O K |
| 360 min Summer | 12.549 | 0.049 | 6.9 | 0.2 | O K |
| 480 min Summer | 12.540 | 0.040 | 5.7 | 0.2 | O K |
| 600 min Summer | 12.535 | 0.035 | 4.9 | 0.2 | O K |
| 720 min Summer | 12.530 | 0.030 | 4.3 | 0.2 | O K |
| 960 min Summer | 12.525 | 0.025 | 3.5 | 0.1 | O K |
| 1440 min Summer | 12.518 | 0.018 | 2.6 | 0.1 | O K |
| 2160 min Summer | 12.514 | 0.014 | 1.9 | 0.1 | O K |
| 2880 min Summer | 12.511 | 0.011 | 1.5 | 0.1 | O K |
| 4320 min Summer | 12.508 | 0.008 | 1.1 | 0.0 | O K |
| 5760 min Summer | 12.507 | 0.007 | 1.0 | 0.0 | O K |
| 7200 min Summer | 12.506 | 0.006 | 0.8 | 0.0 | O K |
| 8640 min Summer | 12.505 | 0.005 | 0.7 | 0.0 | O K |
| 10080 min Summer | 12.505 | 0.005 | 0.7 | 0.0 | O K |
| 15 min Winter | 13.434 | 0.934 | 15.0 | 4.7 | O K |
| 30 min Winter | 13.499 | 0.999 | 15.6 | 5.0 | O K |
| 60 min Winter | 13.283 | 0.783 | 13.6 | 3.9 | O K |
| 120 min Winter | 12.898 | 0.398 | 10.2 | 2.0 | O K |
| 180 min Winter | 12.667 | 0.167 | 8.1 | 0.8 | O K |

| Storm Event | Rain (mm/hr) | Time-Peak (mins) |
|---|---|---|
| 15 min Summer | 88.604 | 19 |
| 30 min Summer | 58.947 | 26 |
| 60 min Summer | 37.537 | 42 |
| 120 min Summer | 23.172 | 72 |
| 180 min Summer | 17.261 | 102 |
| 240 min Summer | 13.950 | 132 |
| 360 min Summer | 10.331 | 186 |
| 480 min Summer | 8.337 | 246 |
| 600 min Summer | 7.054 | 306 |
| 720 min Summer | 6.152 | 366 |
| 960 min Summer | 4.954 | 484 |
| 1440 min Summer | 3.645 | 722 |
| 2160 min Summer | 2.678 | 1096 |
| 2880 min Summer | 2.150 | 1460 |
| 4320 min Summer | 1.576 | 2124 |
| 5760 min Summer | 1.264 | 2784 |
| 7200 min Summer | 1.065 | 3680 |
| 8640 min Summer | 0.926 | 4408 |
| 10080 min Summer | 0.823 | 5040 |
| 15 min Winter | 88.604 | 18 |
| 30 min Winter | 58.947 | 26 |
| 60 min Winter | 37.537 | 42 |
| 120 min Winter | 23.172 | 72 |
| 180 min Winter | 17.261 | 102 |

©1982-2011 Micro Drainage Ltd

Summary of Results for 30 year Return Period (+20%)

| Storm Event | Max Level (m) | Max Depth (m) | Max Infiltration (l/s) | Max Volume (m³) | Status |
|---|---|---|---|---|---|
| 240 min Winter | 12.549 | 0.049 | 6.9 | 0.2 | O K |
| 360 min Winter | 12.537 | 0.037 | 5.2 | 0.2 | O K |
| 480 min Winter | 12.530 | 0.030 | 4.2 | 0.1 | O K |
| 600 min Winter | 12.525 | 0.025 | 3.6 | 0.1 | O K |
| 720 min Winter | 12.522 | 0.022 | 3.1 | 0.1 | O K |
| 960 min Winter | 12.518 | 0.018 | 2.5 | 0.1 | O K |
| 1440 min Winter | 12.513 | 0.013 | 1.9 | 0.1 | O K |
| 2160 min Winter | 12.510 | 0.010 | 1.4 | 0.1 | O K |
| 2880 min Winter | 12.508 | 0.008 | 1.2 | 0.0 | O K |
| 4320 min Winter | 12.506 | 0.006 | 0.9 | 0.0 | O K |
| 5760 min Winter | 12.505 | 0.005 | 0.7 | 0.0 | O K |
| 7200 min Winter | 12.504 | 0.004 | 0.6 | 0.0 | O K |
| 8640 min Winter | 12.504 | 0.004 | 0.5 | 0.0 | O K |
| 10080 min Winter | 12.504 | 0.004 | 0.5 | 0.0 | O K |

| Storm Event | Rain (mm/hr) | Time-Peak (mins) |
|---|---|---|
| 240 min Winter | 13.950 | 126 |
| 360 min Winter | 10.331 | 186 |
| 480 min Winter | 8.337 | 250 |
| 600 min Winter | 7.054 | 308 |
| 720 min Winter | 6.152 | 362 |
| 960 min Winter | 4.954 | 490 |
| 1440 min Winter | 3.645 | 700 |
| 2160 min Winter | 2.678 | 1092 |
| 2880 min Winter | 2.150 | 1488 |
| 4320 min Winter | 1.576 | 2128 |
| 5760 min Winter | 1.264 | 2744 |
| 7200 min Winter | 1.065 | 3840 |
| 8640 min Winter | 0.926 | 4040 |
| 10080 min Winter | 0.823 | 5240 |

©1982-2011 Micro Drainage Ltd

## Rainfall Details

| | | | |
|---|---|---|---|
| Rainfall Model | FSR | Winter Storms | Yes |
| Return Period (years) | 30 | Cv (Summer) | 0.750 |
| Region | England and Wales | Cv (Winter) | 0.840 |
| M5-60 (mm) | 20.300 | Shortest Storm (mins) | 15 |
| Ratio R | 0.350 | Longest Storm (mins) | 10080 |
| Summer Storms | Yes | Climate Change % | +20 |

## Time / Area Diagram

Total Area (ha) 0.085

| Time (mins) | Area (ha) | Time (mins) | Area (ha) | Time (mins) | Area (ha) |
|---|---|---|---|---|---|
| 0-4 | 0.028 | 4-8 | 0.028 | 8-12 | 0.029 |

©1982-2011 Micro Drainage Ltd

## Model Details

Storage is Online Cover Level (m) 15.100

## Lined Soakaway Structure

| | | | |
|---|---|---|---|
| Infiltration Coefficient Base (m/hr) | 5.50000 | Ring Diameter (m) | 2.10 |
| Infiltration Coefficient Side (m/hr) | 5.50000 | Pit Multiplier | 1.4 |
| Safety Factor | 2.0 | Number Required | 1 |
| Porosity | 0.30 | Cap Volume Depth (m) | 2.000 |
| Invert Level (m) | 12.500 | Cap Infiltration Depth (m) | 2.000 |

©1982-2011 Micro Drainage Ltd

Event: 30 min Winter

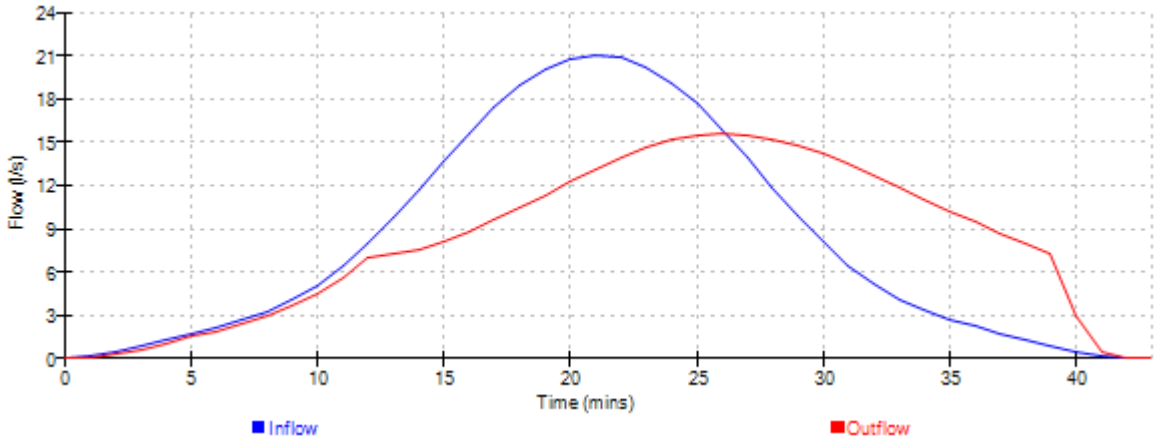


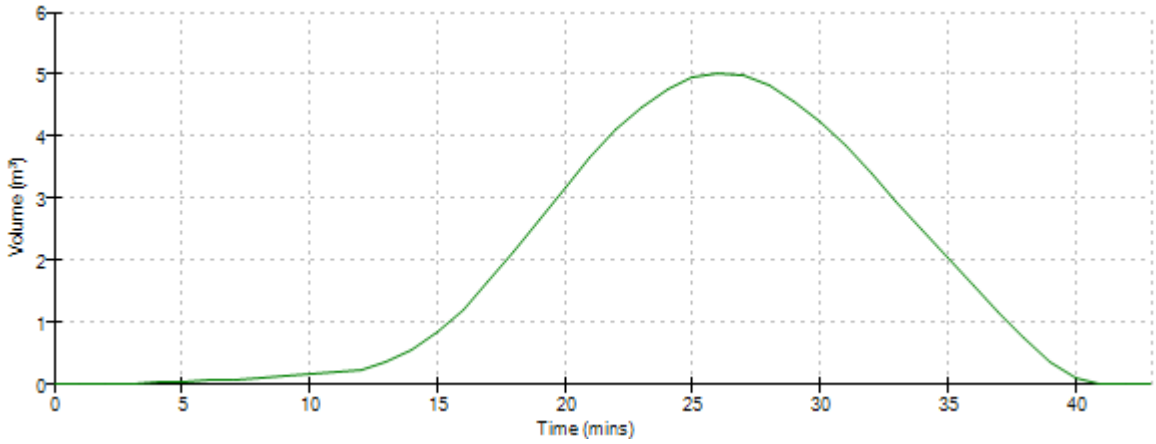


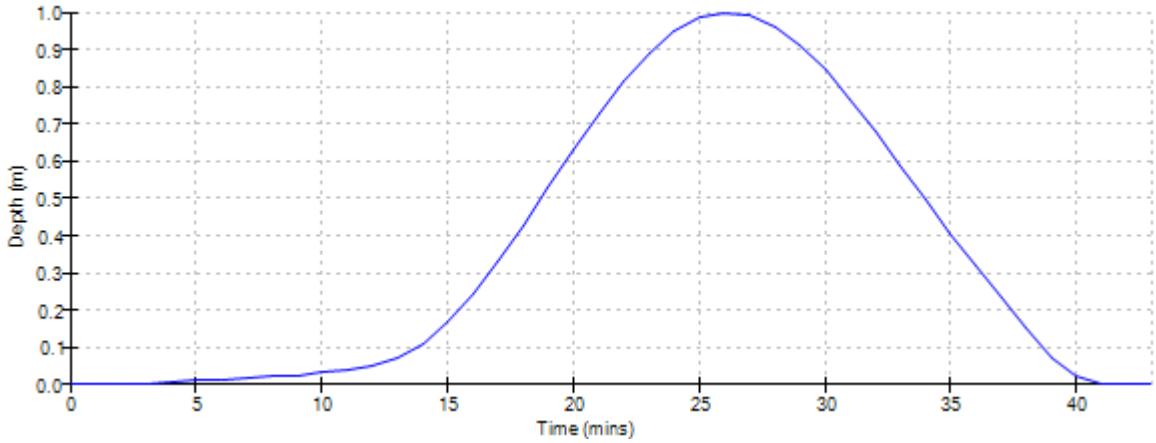


©1982-2011 Micro Drainage Ltd

## Summary of Results for 100 year Return Period (+20%)

Half Drain Time : 4 minutes.

| Storm Event | Max Level (m) | Max Depth (m) | Max Infiltration (l/s) | Max Volume (m³) | Status |
|---|---|---|---|---|---|
| 15 min Summer | 13.689 | 1.189 | 17.3 | 6.0 | O K |
| 30 min Summer | 13.842 | 1.342 | 18.7 | 6.7 | O K |
| 60 min Summer | 13.727 | 1.227 | 17.6 | 6.2 | O K |
| 120 min Summer | 13.394 | 0.894 | 14.6 | 4.5 | O K |
| 180 min Summer | 13.128 | 0.628 | 12.2 | 3.1 | O K |
| 240 min Summer | 12.937 | 0.437 | 10.5 | 2.2 | O K |
| 360 min Summer | 12.697 | 0.197 | 8.4 | 1.0 | O K |
| 480 min Summer | 12.562 | 0.062 | 7.2 | 0.3 | O K |
| 600 min Summer | 12.544 | 0.044 | 6.2 | 0.2 | O K |
| 720 min Summer | 12.539 | 0.039 | 5.5 | 0.2 | O K |
| 960 min Summer | 12.531 | 0.031 | 4.4 | 0.2 | O K |
| 1440 min Summer | 12.523 | 0.023 | 3.2 | 0.1 | O K |
| 2160 min Summer | 12.517 | 0.017 | 2.4 | 0.1 | O K |
| 2880 min Summer | 12.513 | 0.013 | 1.9 | 0.1 | O K |
| 4320 min Summer | 12.510 | 0.010 | 1.4 | 0.0 | O K |
| 5760 min Summer | 12.508 | 0.008 | 1.2 | 0.0 | O K |
| 7200 min Summer | 12.507 | 0.007 | 1.0 | 0.0 | O K |
| 8640 min Summer | 12.506 | 0.006 | 0.8 | 0.0 | O K |
| 10080 min Summer | 12.506 | 0.006 | 0.8 | 0.0 | O K |
| 15 min Winter | 13.866 | 1.366 | 18.9 | 6.9 | O K |
| 30 min Winter | 13.987 | 1.487 | 20.0 | 7.5 | O K |
| 60 min Winter | 13.731 | 1.231 | 17.7 | 6.2 | O K |
| 120 min Winter | 13.233 | 0.733 | 13.2 | 3.7 | O K |
| 180 min Winter | 12.926 | 0.426 | 10.4 | 2.1 | O K |

| Storm Event | Rain (mm/hr) | Time-Peak (mins) |
|---|---|---|
| 15 min Summer | 114.876 | 19 |
| 30 min Summer | 77.140 | 26 |
| 60 min Summer | 49.360 | 42 |
| 120 min Summer | 30.423 | 72 |
| 180 min Summer | 22.546 | 102 |
| 240 min Summer | 18.126 | 132 |
| 360 min Summer | 13.338 | 192 |
| 480 min Summer | 10.711 | 250 |
| 600 min Summer | 9.027 | 308 |
| 720 min Summer | 7.846 | 368 |
| 960 min Summer | 6.282 | 484 |
| 1440 min Summer | 4.583 | 730 |
| 2160 min Summer | 3.337 | 1084 |
| 2880 min Summer | 2.660 | 1464 |
| 4320 min Summer | 1.929 | 2128 |
| 5760 min Summer | 1.534 | 2848 |
| 7200 min Summer | 1.286 | 3552 |
| 8640 min Summer | 1.113 | 4304 |
| 10080 min Summer | 0.986 | 5000 |
| 15 min Winter | 114.876 | 19 |
| 30 min Winter | 77.140 | 26 |
| 60 min Winter | 49.360 | 42 |
| 120 min Winter | 30.423 | 74 |
| 180 min Winter | 22.546 | 104 |

©1982-2011 Micro Drainage Ltd

Summary of Results for 100 year Return Period (+20%)

| Storm Event | Max Level (m) | Max Depth (m) | Max Infiltration (l/s) | Max Volume (m³) | Status |
|---|---|---|---|---|---|
| 240 min Winter | 12.728 | 0.228 | 8.6 | 1.1 | O K |
| 360 min Winter | 12.547 | 0.047 | 6.7 | 0.2 | O K |
| 480 min Winter | 12.538 | 0.038 | 5.4 | 0.2 | O K |
| 600 min Winter | 12.532 | 0.032 | 4.5 | 0.2 | O K |
| 720 min Winter | 12.528 | 0.028 | 4.0 | 0.1 | O K |
| 960 min Winter | 12.523 | 0.023 | 3.2 | 0.1 | O K |
| 1440 min Winter | 12.517 | 0.017 | 2.4 | 0.1 | O K |
| 2160 min Winter | 12.512 | 0.012 | 1.7 | 0.1 | O K |
| 2880 min Winter | 12.510 | 0.010 | 1.4 | 0.1 | O K |
| 4320 min Winter | 12.507 | 0.007 | 1.0 | 0.0 | O K |
| 5760 min Winter | 12.506 | 0.006 | 0.9 | 0.0 | O K |
| 7200 min Winter | 12.505 | 0.005 | 0.7 | 0.0 | O K |
| 8640 min Winter | 12.505 | 0.005 | 0.7 | 0.0 | O K |
| 10080 min Winter | 12.504 | 0.004 | 0.6 | 0.0 | O K |

| Storm Event | Rain (mm/hr) | Time-Peak (mins) |
|---|---|---|
| 240 min Winter | 18.126 | 134 |
| 360 min Winter | 13.338 | 184 |
| 480 min Winter | 10.711 | 250 |
| 600 min Winter | 9.027 | 306 |
| 720 min Winter | 7.846 | 366 |
| 960 min Winter | 6.282 | 480 |
| 1440 min Winter | 4.583 | 724 |
| 2160 min Winter | 3.337 | 1080 |
| 2880 min Winter | 2.660 | 1440 |
| 4320 min Winter | 1.929 | 2196 |
| 5760 min Winter | 1.534 | 3120 |
| 7200 min Winter | 1.286 | 3336 |
| 8640 min Winter | 1.113 | 4752 |
| 10080 min Winter | 0.986 | 4760 |

©1982-2011 Micro Drainage Ltd

## Rainfall Details

| | | | |
|---|---|---|---|
| Rainfall Model | FSR | Winter Storms | Yes |
| Return Period (years) | 100 | Cv (Summer) | 0.750 |
| Region | England and Wales | Cv (Winter) | 0.840 |
| M5-60 (mm) | 20.300 | Shortest Storm (mins) | 15 |
| Ratio R | 0.350 | Longest Storm (mins) | 10080 |
| Summer Storms | Yes | Climate Change % | +20 |

## Time / Area Diagram

Total Area (ha) 0.085

| Time (mins) | Area (ha) | Time (mins) | Area (ha) | Time (mins) | Area (ha) |
|---|---|---|---|---|---|
| 0-4 | 0.028 | 4-8 | 0.028 | 8-12 | 0.029 |

©1982-2011 Micro Drainage Ltd

## Model Details

Storage is Online Cover Level (m) 15.100

## Lined Soakaway Structure

| | | | |
|---|---|---|---|
| Infiltration Coefficient Base (m/hr) | 5.50000 | Ring Diameter (m) | 2.10 |
| Infiltration Coefficient Side (m/hr) | 5.50000 | Pit Multiplier | 1.4 |
| Safety Factor | 2.0 | Number Required | 1 |
| Porosity | 0.30 | Cap Volume Depth (m) | 2.000 |
| Invert Level (m) | 12.500 | Cap Infiltration Depth (m) | 2.000 |

©1982-2011 Micro Drainage Ltd

Event: 30 min Winter

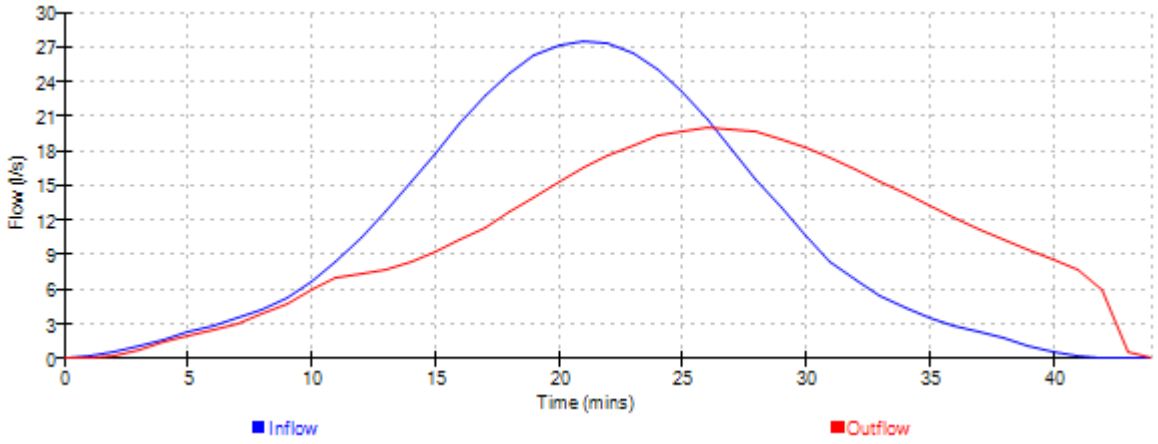


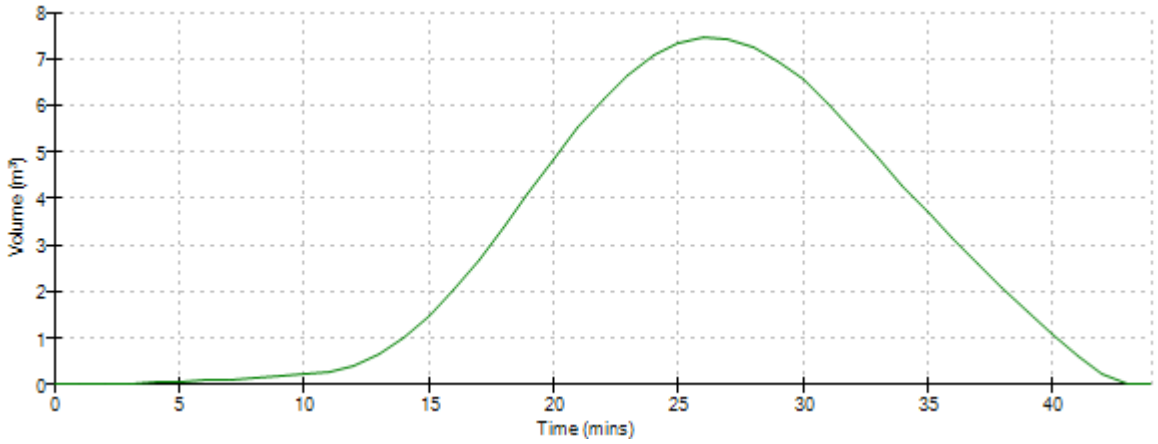


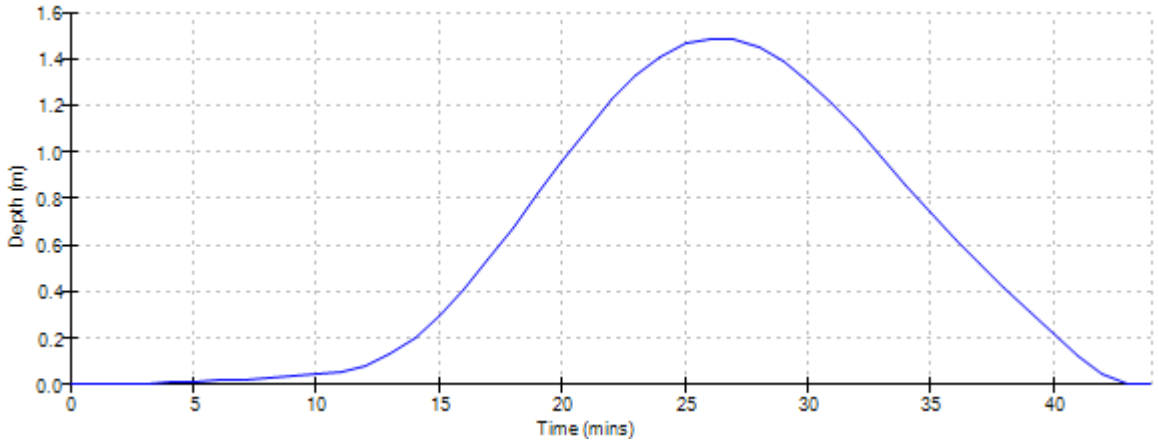


©1982-2011 Micro Drainage Ltd

## Summary of Results for 1 year Return Period (+45%)

Half Drain Time : 1 minutes.

| Storm Event | Max Level (m) | Max Depth (m) | Max Infiltration (l/s) | Max Volume (m³) | Status |
|---|---|---|---|---|---|
| 15 min Summer | 12.654 | 0.154 | 8.0 | 0.8 | O K |
| 30 min Summer | 12.689 | 0.189 | 8.3 | 0.9 | O K |
| 60 min Summer | 12.647 | 0.147 | 7.9 | 0.7 | O K |
| 120 min Summer | 12.550 | 0.050 | 7.0 | 0.3 | O K |
| 180 min Summer | 12.541 | 0.041 | 5.7 | 0.2 | O K |
| 240 min Summer | 12.535 | 0.035 | 4.9 | 0.2 | O K |
| 360 min Summer | 12.527 | 0.027 | 3.8 | 0.1 | O K |
| 480 min Summer | 12.523 | 0.023 | 3.3 | 0.1 | O K |
| 600 min Summer | 12.520 | 0.020 | 2.8 | 0.1 | O K |
| 720 min Summer | 12.518 | 0.018 | 2.5 | 0.1 | O K |
| 960 min Summer | 12.515 | 0.015 | 2.1 | 0.1 | O K |
| 1440 min Summer | 12.511 | 0.011 | 1.6 | 0.1 | O K |
| 2160 min Summer | 12.509 | 0.009 | 1.2 | 0.0 | O K |
| 2880 min Summer | 12.507 | 0.007 | 1.0 | 0.0 | O K |
| 4320 min Summer | 12.506 | 0.006 | 0.8 | 0.0 | O K |
| 5760 min Summer | 12.505 | 0.005 | 0.7 | 0.0 | O K |
| 7200 min Summer | 12.504 | 0.004 | 0.5 | 0.0 | O K |
| 8640 min Summer | 12.504 | 0.004 | 0.6 | 0.0 | O K |
| 10080 min Summer | 12.503 | 0.003 | 0.5 | 0.0 | O K |
| 15 min Winter | 12.717 | 0.217 | 8.6 | 1.1 | O K |
| 30 min Winter | 12.729 | 0.229 | 8.7 | 1.2 | O K |
| 60 min Winter | 12.621 | 0.121 | 7.7 | 0.6 | O K |
| 120 min Winter | 12.541 | 0.041 | 5.8 | 0.2 | O K |
| 180 min Winter | 12.532 | 0.032 | 4.5 | 0.2 | O K |

| Storm Event | Rain (mm/hr) | Time-Peak (mins) |
|---|---|---|
| 15 min Summer | 43.660 | 17 |
| 30 min Summer | 29.077 | 25 |
| 60 min Summer | 18.874 | 40 |
| 120 min Summer | 12.031 | 66 |
| 180 min Summer | 9.209 | 96 |
| 240 min Summer | 7.596 | 126 |
| 360 min Summer | 5.745 | 184 |
| 480 min Summer | 4.712 | 246 |
| 600 min Summer | 4.040 | 306 |
| 720 min Summer | 3.563 | 364 |
| 960 min Summer | 2.924 | 486 |
| 1440 min Summer | 2.213 | 718 |
| 2160 min Summer | 1.672 | 1076 |
| 2880 min Summer | 1.371 | 1416 |
| 4320 min Summer | 1.038 | 2156 |
| 5760 min Summer | 0.853 | 2864 |
| 7200 min Summer | 0.730 | 3664 |
| 8640 min Summer | 0.642 | 4168 |
| 10080 min Summer | 0.576 | 4784 |
| 15 min Winter | 43.660 | 17 |
| 30 min Winter | 29.077 | 25 |
| 60 min Winter | 18.874 | 40 |
| 120 min Winter | 12.031 | 68 |
| 180 min Winter | 9.209 | 98 |

©1982-2011 Micro Drainage Ltd

Summary of Results for 1 year Return Period (+45%)

| Storm Event | Max Level (m) | Max Depth (m) | Max Infiltration (l/s) | Max Volume (m³) | Status |
|---|---|---|---|---|---|
| 240 min Winter | 12.527 | 0.027 | 3.8 | 0.1 | O K |
| 360 min Winter | 12.521 | 0.021 | 2.9 | 0.1 | O K |
| 480 min Winter | 12.517 | 0.017 | 2.4 | 0.1 | O K |
| 600 min Winter | 12.515 | 0.015 | 2.1 | 0.1 | O K |
| 720 min Winter | 12.513 | 0.013 | 1.8 | 0.1 | O K |
| 960 min Winter | 12.511 | 0.011 | 1.5 | 0.1 | O K |
| 1440 min Winter | 12.508 | 0.008 | 1.2 | 0.0 | O K |
| 2160 min Winter | 12.506 | 0.006 | 0.9 | 0.0 | O K |
| 2880 min Winter | 12.505 | 0.005 | 0.7 | 0.0 | O K |
| 4320 min Winter | 12.504 | 0.004 | 0.6 | 0.0 | O K |
| 5760 min Winter | 12.504 | 0.004 | 0.5 | 0.0 | O K |
| 7200 min Winter | 12.503 | 0.003 | 0.5 | 0.0 | O K |
| 8640 min Winter | 12.503 | 0.003 | 0.4 | 0.0 | O K |
| 10080 min Winter | 12.503 | 0.003 | 0.4 | 0.0 | O K |

| Storm Event | Rain (mm/hr) | Time-Peak (mins) |
|---|---|---|
| 240 min Winter | 7.596 | 130 |
| 360 min Winter | 5.745 | 186 |
| 480 min Winter | 4.712 | 250 |
| 600 min Winter | 4.040 | 312 |
| 720 min Winter | 3.563 | 364 |
| 960 min Winter | 2.924 | 500 |
| 1440 min Winter | 2.213 | 696 |
| 2160 min Winter | 1.672 | 1044 |
| 2880 min Winter | 1.371 | 1428 |
| 4320 min Winter | 1.038 | 2236 |
| 5760 min Winter | 0.853 | 2864 |
| 7200 min Winter | 0.730 | 3592 |
| 8640 min Winter | 0.642 | 4680 |
| 10080 min Winter | 0.576 | 5144 |

©1982-2011 Micro Drainage Ltd

## Rainfall Details

| | | | |
|---|---|---|---|
| Rainfall Model | FSR | Winter Storms | Yes |
| Return Period (years) | 1 | Cv (Summer) | 0.750 |
| Region | England and Wales | Cv (Winter) | 0.840 |
| M5-60 (mm) | 20.300 | Shortest Storm (mins) | 15 |
| Ratio R | 0.350 | Longest Storm (mins) | 10080 |
| Summer Storms | Yes | Climate Change % | +45 |

## Time / Area Diagram

Total Area (ha) 0.085

| Time (mins) | Area (ha) | Time (mins) | Area (ha) | Time (mins) | Area (ha) |
|---|---|---|---|---|---|
| 0-4 | 0.028 | 4-8 | 0.028 | 8-12 | 0.028 |

©1982-2011 Micro Drainage Ltd

## Model Details

Storage is Online Cover Level (m) 15.100

## Lined Soakaway Structure

| | | | |
|---|---|---|---|
| Infiltration Coefficient Base (m/hr) | 5.50000 | Ring Diameter (m) | 2.10 |
| Infiltration Coefficient Side (m/hr) | 5.50000 | Pit Multiplier | 1.4 |
| Safety Factor | 2.0 | Number Required | 1 |
| Porosity | 0.30 | Cap Volume Depth (m) | 2.000 |
| Invert Level (m) | 12.500 | Cap Infiltration Depth (m) | 2.000 |

©1982-2011 Micro Drainage Ltd

Event: 30 min Winter

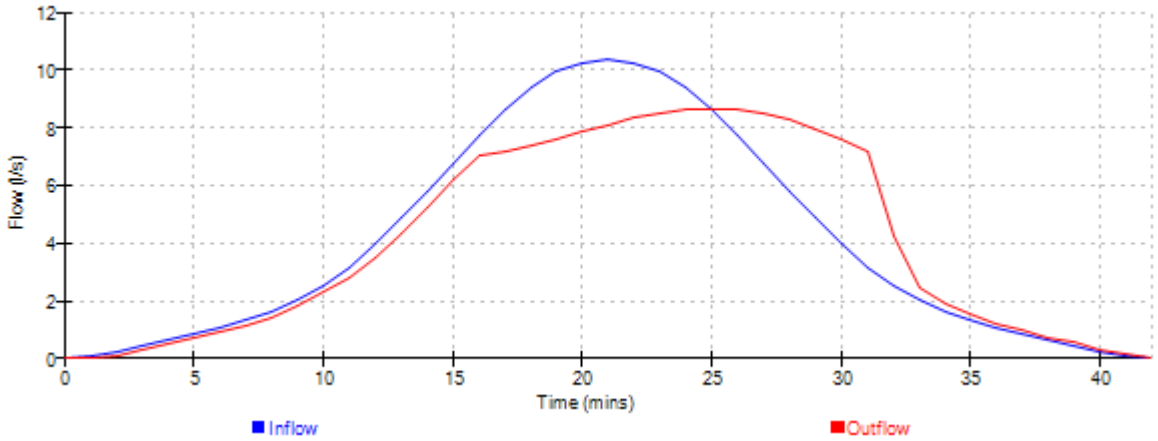


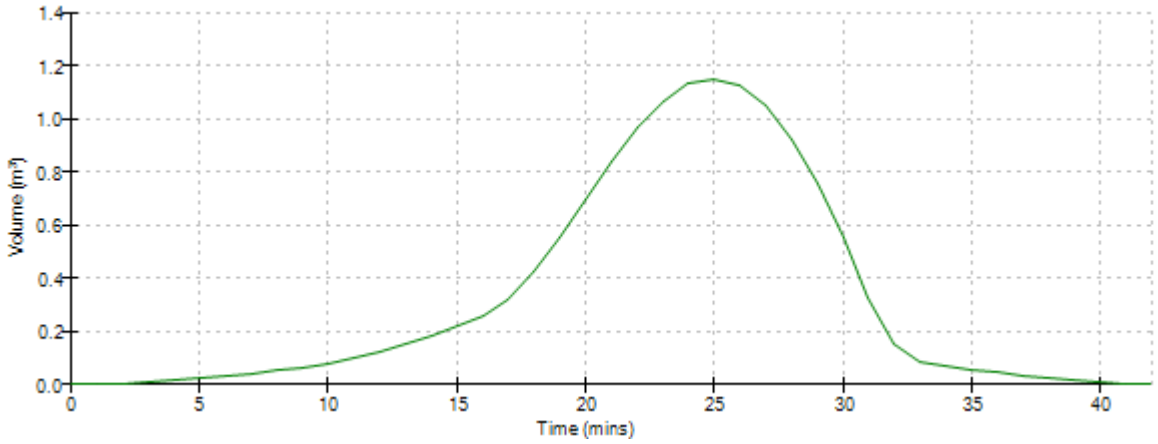


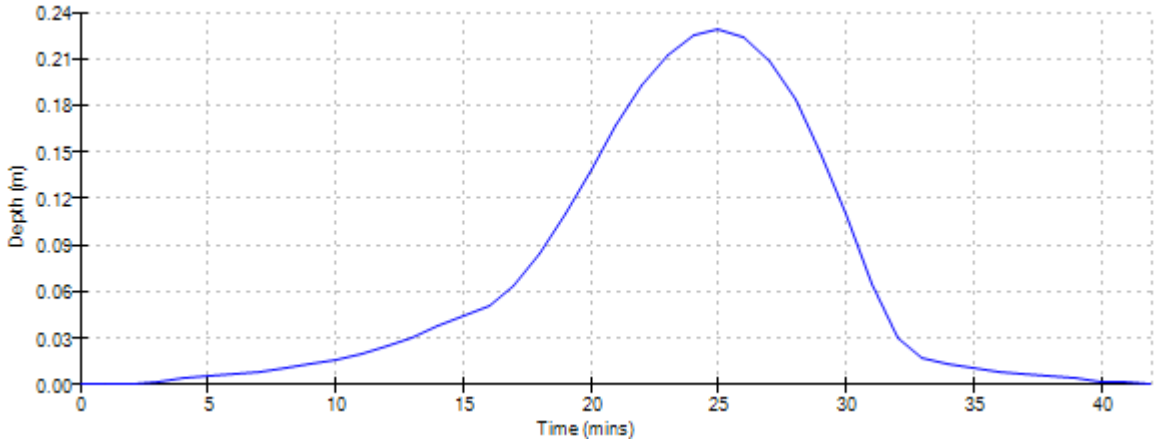


©1982-2011 Micro Drainage Ltd

## Summary of Results for 30 year Return Period (+45%)

Half Drain Time : 4 minutes.

| Storm Event | Max Level (m) | Max Depth (m) | Max Infiltration (l/s) | Max Volume (m³) | Status |
|---|---|---|---|---|---|
| 15 min Summer | 13.569 | 1.069 | 16.2 | 5.4 | O K |
| 30 min Summer | 13.696 | 1.196 | 17.3 | 6.0 | O K |
| 60 min Summer | 13.576 | 1.076 | 16.3 | 5.4 | O K |
| 120 min Summer | 13.272 | 0.772 | 13.5 | 3.9 | O K |
| 180 min Summer | 13.031 | 0.531 | 11.4 | 2.7 | O K |
| 240 min Summer | 12.860 | 0.360 | 9.8 | 1.8 | O K |
| 360 min Summer | 12.645 | 0.145 | 7.9 | 0.7 | O K |
| 480 min Summer | 12.549 | 0.049 | 6.9 | 0.2 | O K |
| 600 min Summer | 12.542 | 0.042 | 5.9 | 0.2 | O K |
| 720 min Summer | 12.537 | 0.037 | 5.2 | 0.2 | O K |
| 960 min Summer | 12.530 | 0.030 | 4.2 | 0.1 | O K |
| 1440 min Summer | 12.522 | 0.022 | 3.1 | 0.1 | O K |
| 2160 min Summer | 12.516 | 0.016 | 2.3 | 0.1 | O K |
| 2880 min Summer | 12.513 | 0.013 | 1.9 | 0.1 | O K |
| 4320 min Summer | 12.510 | 0.010 | 1.4 | 0.1 | O K |
| 5760 min Summer | 12.508 | 0.008 | 1.1 | 0.0 | O K |
| 7200 min Summer | 12.507 | 0.007 | 1.0 | 0.0 | O K |
| 8640 min Summer | 12.506 | 0.006 | 0.8 | 0.0 | O K |
| 10080 min Summer | 12.506 | 0.006 | 0.8 | 0.0 | O K |
| 15 min Winter | 13.739 | 1.239 | 17.7 | 6.2 | O K |
| 30 min Winter | 13.829 | 1.329 | 18.5 | 6.7 | O K |
| 60 min Winter | 13.579 | 1.079 | 16.3 | 5.4 | O K |
| 120 min Winter | 13.120 | 0.620 | 12.2 | 3.1 | O K |
| 180 min Winter | 12.841 | 0.341 | 9.7 | 1.7 | O K |

| Storm Event | Rain (mm/hr) | Time-Peak (mins) |
|---|---|---|
| 15 min Summer | 107.064 | 19 |
| 30 min Summer | 71.228 | 26 |
| 60 min Summer | 45.357 | 42 |
| 120 min Summer | 27.999 | 72 |
| 180 min Summer | 20.857 | 102 |
| 240 min Summer | 16.856 | 132 |
| 360 min Summer | 12.483 | 192 |
| 480 min Summer | 10.074 | 248 |
| 600 min Summer | 8.524 | 306 |
| 720 min Summer | 7.434 | 366 |
| 960 min Summer | 5.986 | 484 |
| 1440 min Summer | 4.405 | 722 |
| 2160 min Summer | 3.236 | 1088 |
| 2880 min Summer | 2.598 | 1452 |
| 4320 min Summer | 1.905 | 2136 |
| 5760 min Summer | 1.527 | 2848 |
| 7200 min Summer | 1.287 | 3632 |
| 8640 min Summer | 1.119 | 4104 |
| 10080 min Summer | 0.995 | 5144 |
| 15 min Winter | 107.064 | 18 |
| 30 min Winter | 71.228 | 26 |
| 60 min Winter | 45.357 | 42 |
| 120 min Winter | 27.999 | 72 |
| 180 min Winter | 20.857 | 104 |

©1982-2011 Micro Drainage Ltd

Summary of Results for 30 year Return Period (+45%)

| Storm Event | Max Level (m) | Max Depth (m) | Max Infiltration (l/s) | Max Volume (m³) | Status |
|---|---|---|---|---|---|
| 240 min Winter | 12.663 | 0.163 | 8.1 | 0.8 | O K |
| 360 min Winter | 12.544 | 0.044 | 6.2 | 0.2 | O K |
| 480 min Winter | 12.536 | 0.036 | 5.0 | 0.2 | O K |
| 600 min Winter | 12.531 | 0.031 | 4.3 | 0.2 | O K |
| 720 min Winter | 12.527 | 0.027 | 3.8 | 0.1 | O K |
| 960 min Winter | 12.522 | 0.022 | 3.1 | 0.1 | O K |
| 1440 min Winter | 12.516 | 0.016 | 2.2 | 0.1 | O K |
| 2160 min Winter | 12.512 | 0.012 | 1.7 | 0.1 | O K |
| 2880 min Winter | 12.510 | 0.010 | 1.4 | 0.1 | O K |
| 4320 min Winter | 12.507 | 0.007 | 1.0 | 0.0 | O K |
| 5760 min Winter | 12.506 | 0.006 | 0.9 | 0.0 | O K |
| 7200 min Winter | 12.505 | 0.005 | 0.7 | 0.0 | O K |
| 8640 min Winter | 12.505 | 0.005 | 0.7 | 0.0 | O K |
| 10080 min Winter | 12.504 | 0.004 | 0.6 | 0.0 | O K |

| Storm Event | Rain (mm/hr) | Time-Peak (mins) |
|---|---|---|
| 240 min Winter | 16.856 | 132 |
| 360 min Winter | 12.483 | 188 |
| 480 min Winter | 10.074 | 246 |
| 600 min Winter | 8.524 | 312 |
| 720 min Winter | 7.434 | 366 |
| 960 min Winter | 5.986 | 478 |
| 1440 min Winter | 4.405 | 724 |
| 2160 min Winter | 3.236 | 1060 |
| 2880 min Winter | 2.598 | 1412 |
| 4320 min Winter | 1.905 | 2080 |
| 5760 min Winter | 1.527 | 3104 |
| 7200 min Winter | 1.287 | 3600 |
| 8640 min Winter | 1.119 | 4144 |
| 10080 min Winter | 0.995 | 4720 |

©1982-2011 Micro Drainage Ltd

## Rainfall Details

| | | | |
|---|---|---|---|
| Rainfall Model | FSR | Winter Storms | Yes |
| Return Period (years) | 30 | Cv (Summer) | 0.750 |
| Region | England and Wales | Cv (Winter) | 0.840 |
| M5-60 (mm) | 20.300 | Shortest Storm (mins) | 15 |
| Ratio R | 0.350 | Longest Storm (mins) | 10080 |
| Summer Storms | Yes | Climate Change % | +45 |

## Time / Area Diagram

Total Area (ha) 0.085

| Time (mins) | Area (ha) | Time (mins) | Area (ha) | Time (mins) | Area (ha) |
|---|---|---|---|---|---|
| 0-4 | 0.028 | 4-8 | 0.028 | 8-12 | 0.028 |

©1982-2011 Micro Drainage Ltd

## Model Details

Storage is Online Cover Level (m) 15.100

## Lined Soakaway Structure

| | | | |
|---|---|---|---|
| Infiltration Coefficient Base (m/hr) | 5.50000 | Ring Diameter (m) | 2.10 |
| Infiltration Coefficient Side (m/hr) | 5.50000 | Pit Multiplier | 1.4 |
| Safety Factor | 2.0 | Number Required | 1 |
| Porosity | 0.30 | Cap Volume Depth (m) | 2.000 |
| Invert Level (m) | 12.500 | Cap Infiltration Depth (m) | 2.000 |

©1982-2011 Micro Drainage Ltd

Event: 30 min Winter

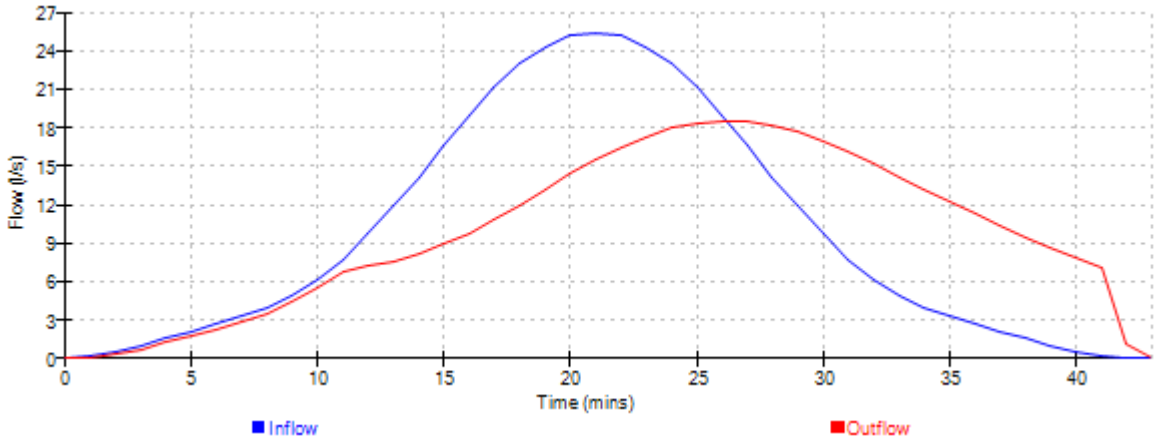


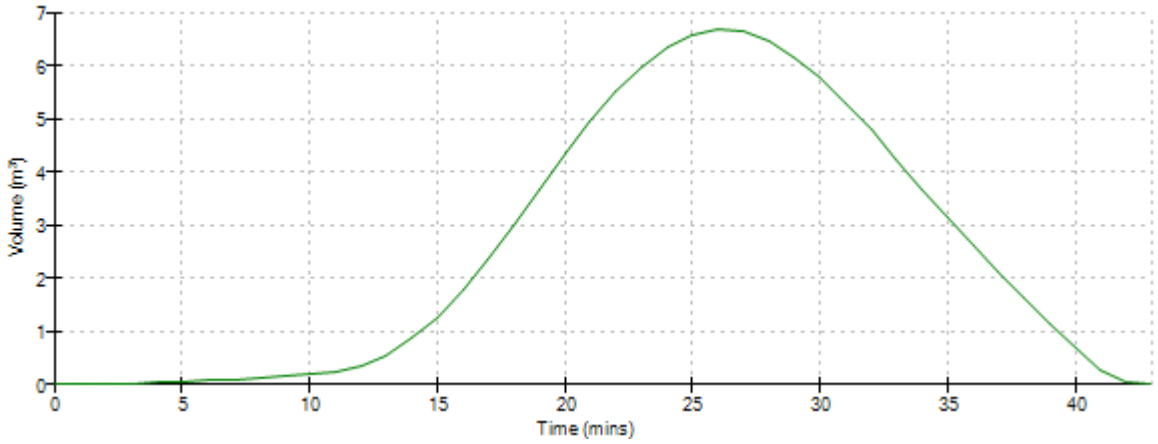


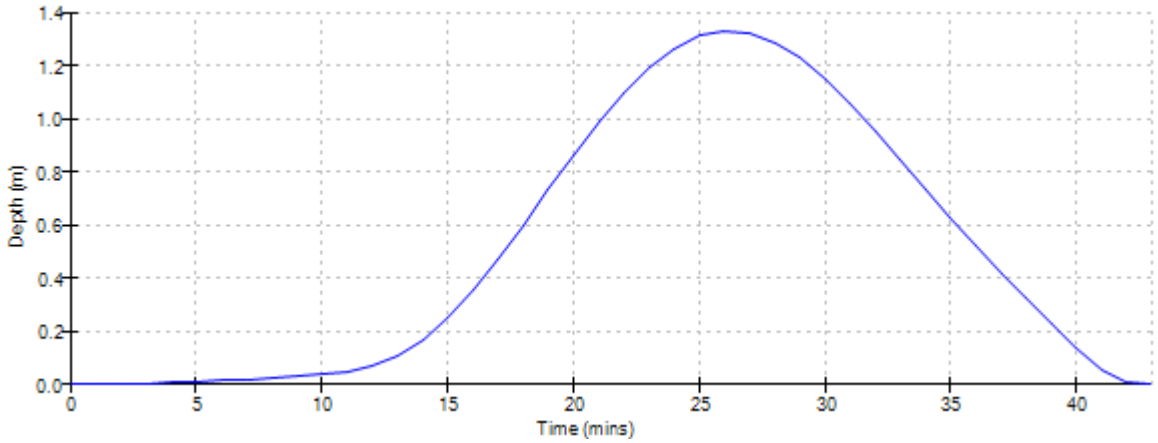


©1982-2011 Micro Drainage Ltd

## Summary of Results for 100 year Return Period (+45%)

Half Drain Time : 4 minutes.

| Storm Event | Max Level (m) | Max Depth (m) | Max Infiltration (l/s) | Max Volume (m³) | Status |
|---|---|---|---|---|---|
| 15 min Summer | 14.046 | 1.546 | 20.5 | 7.8 | O K |
| 30 min Summer | 14.242 | 1.742 | 22.3 | 8.7 | O K |
| 60 min Summer | 14.112 | 1.612 | 21.1 | 8.1 | O K |
| 120 min Summer | 13.718 | 1.218 | 17.5 | 6.1 | O K |
| 180 min Summer | 13.400 | 0.900 | 14.7 | 4.5 | O K |
| 240 min Summer | 13.170 | 0.670 | 12.6 | 3.4 | O K |
| 360 min Summer | 12.876 | 0.376 | 10.0 | 1.9 | O K |
| 480 min Summer | 12.695 | 0.195 | 8.4 | 1.0 | O K |
| 600 min Summer | 12.579 | 0.079 | 7.3 | 0.4 | O K |
| 720 min Summer | 12.547 | 0.047 | 6.6 | 0.2 | O K |
| 960 min Summer | 12.538 | 0.038 | 5.3 | 0.2 | O K |
| 1440 min Summer | 12.527 | 0.027 | 3.8 | 0.1 | O K |
| 2160 min Summer | 12.520 | 0.020 | 2.9 | 0.1 | O K |
| 2880 min Summer | 12.516 | 0.016 | 2.3 | 0.1 | O K |
| 4320 min Summer | 12.512 | 0.012 | 1.7 | 0.1 | O K |
| 5760 min Summer | 12.510 | 0.010 | 1.4 | 0.1 | O K |
| 7200 min Summer | 12.508 | 0.008 | 1.2 | 0.0 | O K |
| 8640 min Summer | 12.507 | 0.007 | 1.0 | 0.0 | O K |
| 10080 min Summer | 12.507 | 0.007 | 1.0 | 0.0 | O K |
| 15 min Winter | 14.263 | 1.763 | 22.4 | 8.8 | O K |
| 30 min Winter | 14.423 | 1.923 | 23.9 | 9.6 | O K |
| 60 min Winter | 14.126 | 1.626 | 21.2 | 8.2 | O K |
| 120 min Winter | 13.533 | 1.033 | 15.9 | 5.2 | O K |
| 180 min Winter | 13.163 | 0.663 | 12.6 | 3.3 | O K |

| Storm Event | Rain (mm/hr) | Time-Peak (mins) |
|---|---|---|
| 15 min Summer | 138.808 | 19 |
| 30 min Summer | 93.211 | 26 |
| 60 min Summer | 59.643 | 42 |
| 120 min Summer | 36.761 | 72 |
| 180 min Summer | 27.243 | 102 |
| 240 min Summer | 21.903 | 132 |
| 360 min Summer | 16.117 | 192 |
| 480 min Summer | 12.943 | 252 |
| 600 min Summer | 10.908 | 310 |
| 720 min Summer | 9.480 | 368 |
| 960 min Summer | 7.591 | 486 |
| 1440 min Summer | 5.538 | 734 |
| 2160 min Summer | 4.032 | 1080 |
| 2880 min Summer | 3.214 | 1468 |
| 4320 min Summer | 2.331 | 2136 |
| 5760 min Summer | 1.854 | 2840 |
| 7200 min Summer | 1.554 | 3560 |
| 8640 min Summer | 1.345 | 4328 |
| 10080 min Summer | 1.191 | 5024 |
| 15 min Winter | 138.808 | 19 |
| 30 min Winter | 93.211 | 26 |
| 60 min Winter | 59.643 | 42 |
| 120 min Winter | 36.761 | 74 |
| 180 min Winter | 27.243 | 104 |

©1982-2011 Micro Drainage Ltd

Summary of Results for 100 year Return Period (+45%)

| Storm Event | Max Level (m) | Max Depth (m) | Max Infiltration (l/s) | Max Volume (m³) | Status |
|---|---|---|---|---|---|
| 240 min Winter | 12.923 | 0.423 | 10.4 | 2.1 | O K |
| 360 min Winter | 12.642 | 0.142 | 7.9 | 0.7 | O K |
| 480 min Winter | 12.546 | 0.046 | 6.5 | 0.2 | O K |
| 600 min Winter | 12.539 | 0.039 | 5.5 | 0.2 | O K |
| 720 min Winter | 12.534 | 0.034 | 4.8 | 0.2 | O K |
| 960 min Winter | 12.527 | 0.027 | 3.8 | 0.1 | O K |
| 1440 min Winter | 12.520 | 0.020 | 2.9 | 0.1 | O K |
| 2160 min Winter | 12.515 | 0.015 | 2.1 | 0.1 | O K |
| 2880 min Winter | 12.512 | 0.012 | 1.7 | 0.1 | O K |
| 4320 min Winter | 12.509 | 0.009 | 1.2 | 0.0 | O K |
| 5760 min Winter | 12.507 | 0.007 | 1.0 | 0.0 | O K |
| 7200 min Winter | 12.506 | 0.006 | 0.9 | 0.0 | O K |
| 8640 min Winter | 12.505 | 0.005 | 0.7 | 0.0 | O K |
| 10080 min Winter | 12.505 | 0.005 | 0.7 | 0.0 | O K |

| Storm Event | Rain (mm/hr) | Time-Peak (mins) |
|---|---|---|
| 240 min Winter | 21.903 | 134 |
| 360 min Winter | 16.117 | 194 |
| 480 min Winter | 12.943 | 244 |
| 600 min Winter | 10.908 | 300 |
| 720 min Winter | 9.480 | 364 |
| 960 min Winter | 7.591 | 484 |
| 1440 min Winter | 5.538 | 722 |
| 2160 min Winter | 4.032 | 1088 |
| 2880 min Winter | 3.214 | 1404 |
| 4320 min Winter | 2.331 | 2152 |
| 5760 min Winter | 1.854 | 2944 |
| 7200 min Winter | 1.554 | 3448 |
| 8640 min Winter | 1.345 | 4360 |
| 10080 min Winter | 1.191 | 5200 |

©1982-2011 Micro Drainage Ltd

## Rainfall Details

| | | | |
|---|---|---|---|
| Rainfall Model | FSR | Winter Storms | Yes |
| Return Period (years) | 100 | Cv (Summer) | 0.750 |
| Region | England and Wales | Cv (Winter) | 0.840 |
| M5-60 (mm) | 20.300 | Shortest Storm (mins) | 15 |
| Ratio R | 0.350 | Longest Storm (mins) | 10080 |
| Summer Storms | Yes | Climate Change % | +45 |

## Time / Area Diagram

Total Area (ha) 0.085

| Time (mins) | Area (ha) | Time (mins) | Area (ha) | Time (mins) | Area (ha) |
|---|---|---|---|---|---|
| 0-4 | 0.028 | 4-8 | 0.028 | 8-12 | 0.028 |

©1982-2011 Micro Drainage Ltd

## Model Details

Storage is Online Cover Level (m) 15.100

## Lined Soakaway Structure

| | | | |
|---|---|---|---|
| Infiltration Coefficient Base (m/hr) | 5.50000 | Ring Diameter (m) | 2.10 |
| Infiltration Coefficient Side (m/hr) | 5.50000 | Pit Multiplier | 1.4 |
| Safety Factor | 2.0 | Number Required | 1 |
| Porosity | 0.30 | Cap Volume Depth (m) | 2.000 |
| Invert Level (m) | 12.500 | Cap Infiltration Depth (m) | 2.000 |

©1982-2011 Micro Drainage Ltd

Event: 30 min Winter

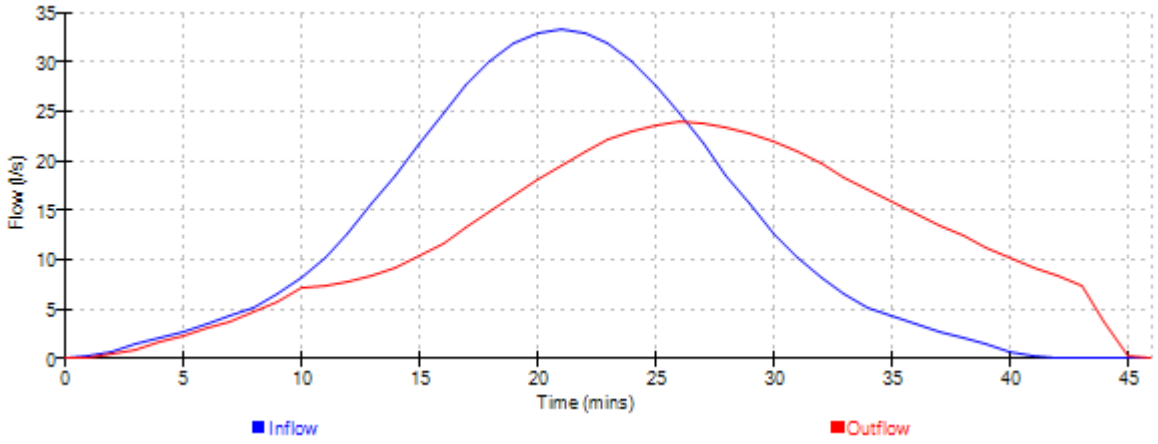


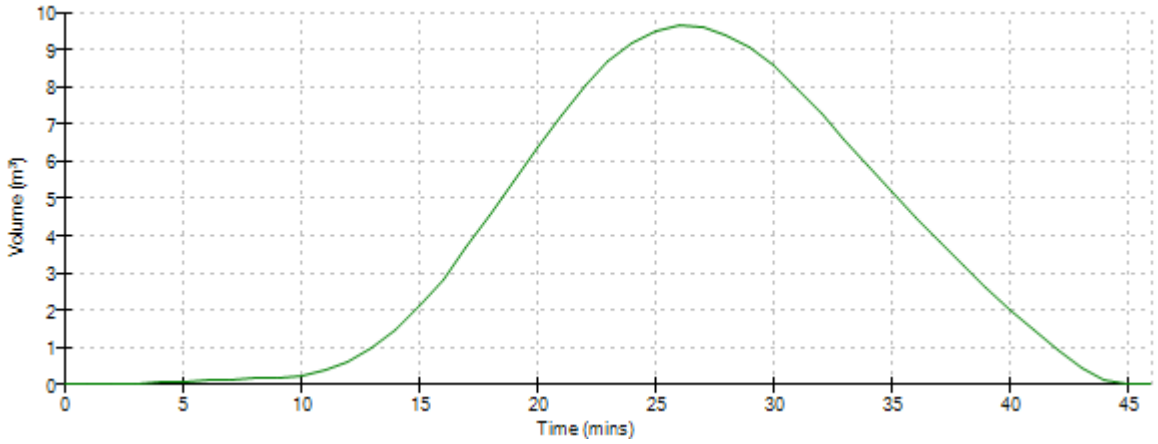


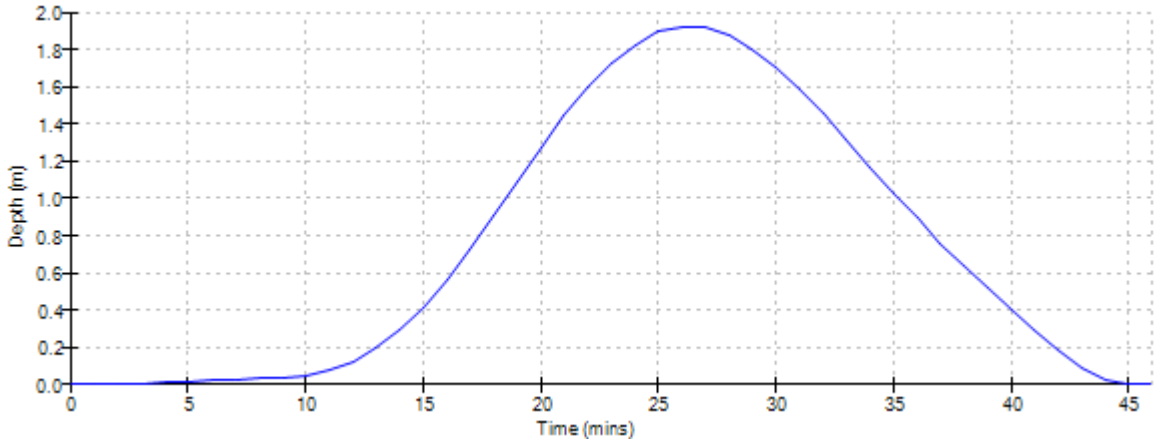


©1982-2011 Micro Drainage Ltd