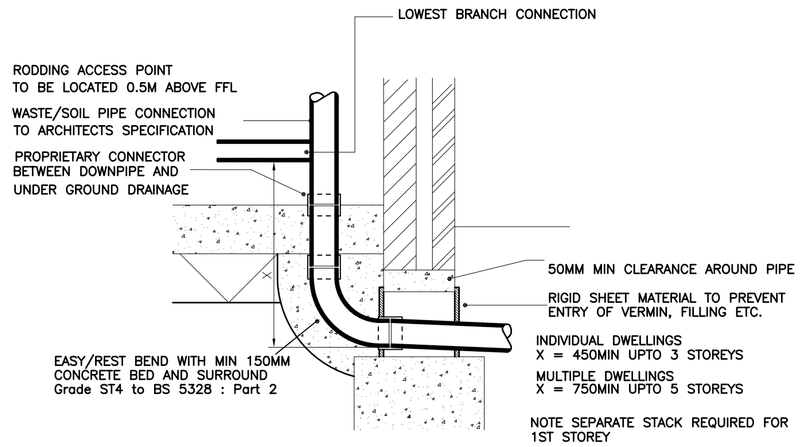

TYPICAL SOIL VENT PIPE DETAILS

SCALE 1:20

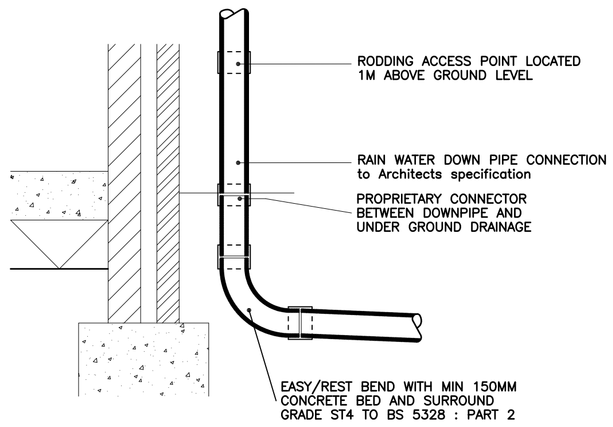

TYPICAL RAIN WATER DOWNPIPE DETAIL

SCALE 1:20

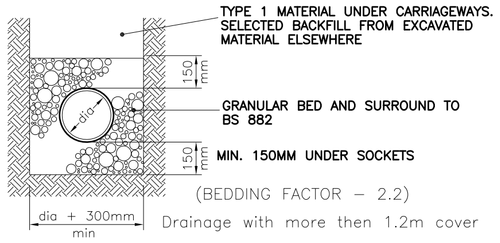

TYPE 'S'

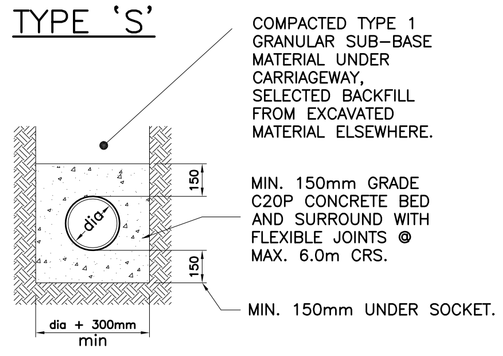

CONCRETE PIPE BEDDING
PIPE BEDDING DETAIL

SCALE 1:20

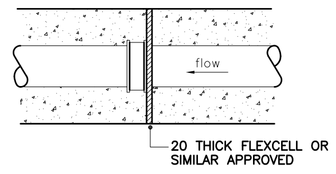

FLEXIBLE JOINT DETAIL
For Sleeved Pipes

TYPICAL PIPE JOINTING DETAIL

SCALE 1:20

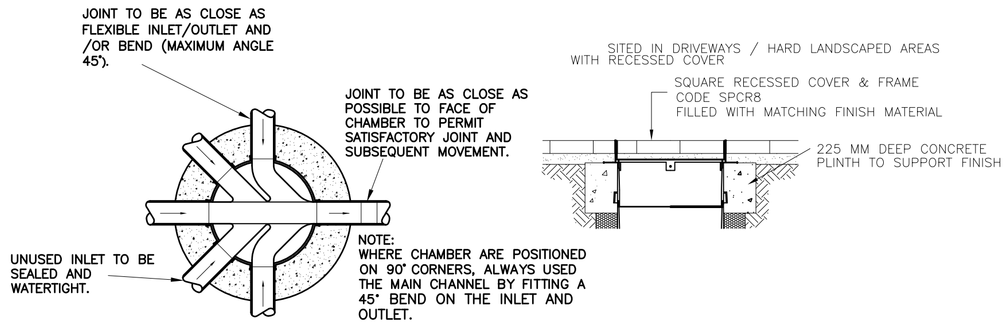

PLAN

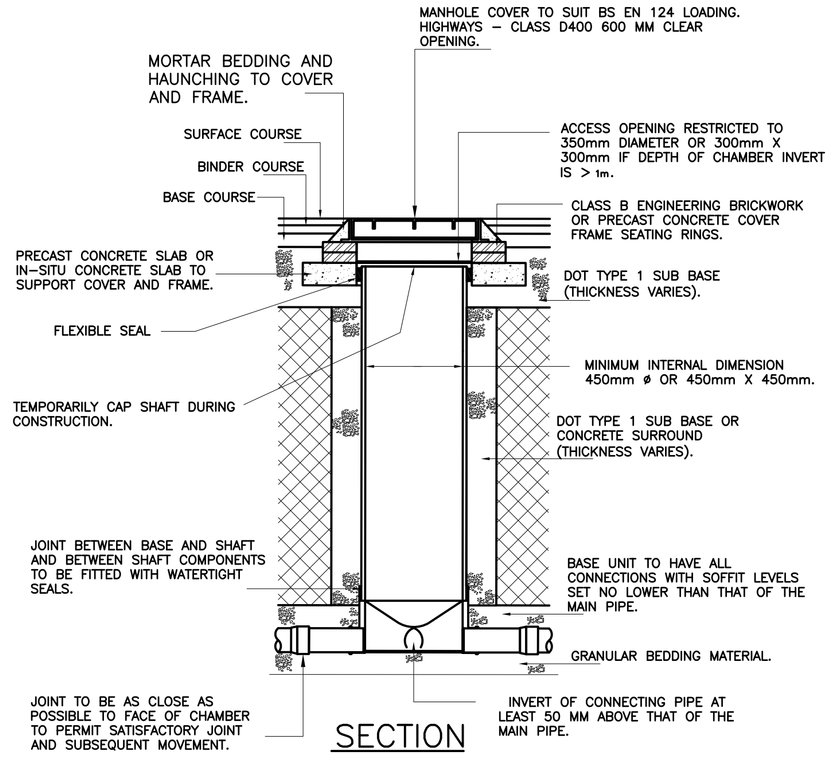

SECTION

TYPE 3 - 450P POLYPROPYLENE INSPECTION CHAMBER (MAX. DEPTH 3.0M TO PIPE SOFFIT).

SCALE 1:20

NOTE: PLASTIC CHAMBERS AND RING SHALL COMPLY WITH BS EN 13598-1 AND BS EN 13598-2 OR HAVE EQUIVALENT INDEPENDENT APPROVAL.

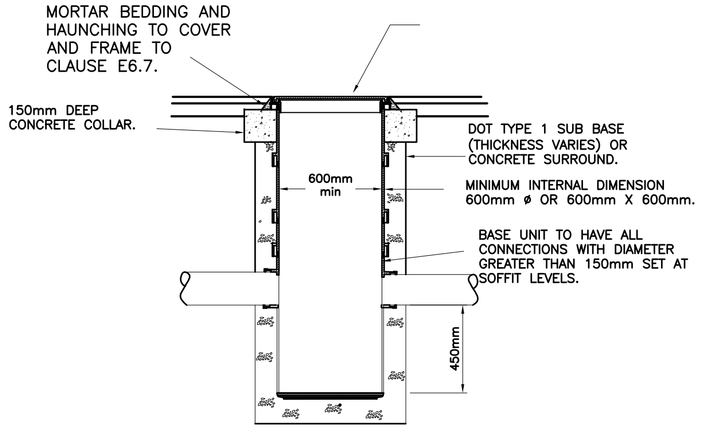

TYPE 3A-600P POLYPROPYLENE SILT TRAP INSPECTION CHAMBER.

SCALE 1:20

In addition to these notes, reference shall be made to the specification of works and the relevant Architect's and Specialist's drawings and specifications.

The Contractor is responsible for verifying all site dimensions before commencing work.

All dimensions are in millimetres unless noted otherwise.

This drawing has been produced electronically and may have been photo reduced or enlarged when printed or copied. Dimensions on this drawing shall not be scaled. Work only to figured dimensions. Any dimensional discrepancies errors or omissions are to be reported to the engineer immediately.

Levels are in metres unless noted otherwise to Ordnance Survey datum.

The Contractor is responsible for the stability of the building whilst the works are in progress.

NOTES

1. THIS DRAWING IS BASED ON DRAWING NO. JO-776-PL-02A BY INCEPTION PLANNING LIMITED.
2. THIS DRAWING IS TO BE READ IN CONJUNCTION WITH THE FOLLOWING DRAWING:

   56377/20 DRAINAGE LAYOUT
3. CONTRACTOR IS TO TAKE NECESSARY PRECAUTIONS TO ENSURE THAT TRENCHES ARE KEPT CLEAR OF GROUND WATER DURING CONSTRUCTION.
4. ALL DRAINAGE WORKS TO BE CARRIED OUT IN ACCORDANCE WITH "SEWERS FOR ADOPTION" 7TH EDITION.
5. ALL ADOPTED PIPEWORK TO BE 100ø VITRIFIED CLAY UNLESS NOTED OTHERWISE.
6. ALL PIPEWORK THROUGH WALLS TO BE IN ACCORDANCE WITH THE BUILDING REGULATIONS.
7. ALL PIPEWORK UNDER ROADS WITH LESS THAN 900MM COVER TO HAVE 150MM CONCRETE SURROUND.
8. MINIMUM GRADIENT TO DRAINS TO BE 1:80 FOR 110ø OR 110ø FW AND 1:100 FOR 110ø SW.
9. POSITIONS OF MANHOLES SHOWN ON THIS DRAWING ARE INDICATIVE ONLY. ACTUAL LOCATIONS TO BE FINALIZED ON SITE.
10. PROVIDE CONCRETE LINTELS OVER OPENINGS WHERE PIPES PASS THROUGH WALLS. ALLOW FOR 150MM CLEARANCE ALL ROUND PIPE.

ALL DIMENSIONS AND LEVELS TO BE CHECKED AND CONFIRMED BY THE ARCHITECT PRIOR TO CONSTRUCTION.

REV	DESCRIPTION	DATE	BY
0	ORIGINAL ISSUE	20/03/25	JS

DIXON HURST
CONSULTING CIVIL & STRUCTURAL ENGINEERS
HEVERSHAM HOUSE, 18-22 BOUNDARY ROAD, HOVE, BN3 4EF
T: (01273) 421444 F: (01273) 420008 E: hove@dhk.co.uk
www.dhk.co.uk
Registered in England No. 3438720 - Registered Office 4 Frederick Terrace, Brighton BN1 1AX.

CONTRACT
OCEAN VIEW BUSINESS PARK
GARDNER ROAD
SOUTHWICK, EAST SUSSEX

DRAWING
DRAINAGE DETAILS

DRAWING No.	REV	CHECKED
56377 / 21	0	
SCALE 1:20@ A1	DATE MAR 25	DRAWN JS / APPROVED
AutoCAD Ref: 56377-10.dwg		

This drawing is produced using Autocad: Only written dimensions are to be respected