Planning Services, Adur District Council

Civic Centre,
Ham Road,
Shoreham-by-Sea,
West Sussex,
BN43 6PR

Tel : (01273) 263222 (calls may be recorded)
website : www.adur.gov.uk
e-mail : developmentcontrol@adur.gov.uk

ADUR DISTRICT COUNCIL

PLAN No. Adla 84/08

DATE RECEIVED 07 APR 2008

Application for Planning Permission.
Town and Country Planning Act 1990

Publication of planning applications on council web sites
Please note that with the exception of applicant contact details and Certificates of Ownership, the information provided on this application form and in supporting documents may be published on the council's website.
If any other information that is provided as part of the application which falls within the definition of personal data under the Data Protection Act and is not to be published on the council's website, please contact the council's planning department.

1. Applicant Name, Address and Contact Details

Title: Mr First name: ASHOK Surname: STHANKIYA

Company name

Street address: 272 UPPER SHOREHAM RD

Town/City: SHOREHAM-BY-SEA

County:

Country:

Postcode: BN43 6BF

	Country Code	National Number	Extension Number
Telephone number:			
Mobile number:			
Fax number:			

Email address:

Are you an agent acting on behalf of the applicant? (●) Yes ( ) No

2. Agent Name, Address and Contact Details

Title: Miss First Name: Kayleigh Surname: Burch-Brodie

Company name: Hughes Network Systems

Street address: Sunrise Parkway
Linford Wood

Town/City: Milton Keynes

County: Buckinghamshire

Country: England

Postcode: MK14 6LS

	Country Code	National Number	Extension Number
Telephone number:			
Mobile number:			
Fax number:			

Email address: K.Burch-Brodie@eu.hns.com

3. Description of the Proposal

Please describe the proposed development including any change of use:

To fit a vsat satellite dish mesh type 0.74 metres eliptical and grey colour to the south facing wall of the building

Has the building, work or change of use already started? ( ) Yes (●) No

4. Site Address Details

Full postal address of the site (including full postcode where available)

House: 272 Suffix:

House name: Southlands Post Office

Street address: Upper Shoreham Road

Town/City: SHOREHAM-BY-SEA

County: West Sussex

Postcode: BN43 6BF

Description of location or a grid reference
(must be completed if postcode is not known):

Easting: 522559

Northing: 106076

Description:

5. Pre-application Advice

Has assistance or prior advice been sought from the local authority about this application? ○ Yes ◉ No

6. Pedestrian and Vehicle Access, Roads and Rights of Way

Is a new or altered vehicle access proposed to or from the public highway? ○ Yes ◉ No

Is a new or altered pedestrian access proposed to or from the public highway? ○ Yes ◉ No

Are there any new public roads to be provided within the site? ○ Yes ◉ No

Are there any new public rights of way to be provided within or adjacent to the site? ○ Yes ◉ No

Do the proposals require any diversions/extinguishments and/or creation of rights of way? ○ Yes ◉ No

7. Waste Storage and Collection

Do the plans incorporate areas to store and aid the collection of waste? ○ Yes ◉ No

Have arrangements been made for the separate storage and collection of recyclable waste? ○ Yes ◉ No

8. Neighbour and Community Consultation

Have you consulted your neighbours or the local community about the proposal? ○ Yes ◉ No

9. Council Employee / Member

Is the applicant or agent related to any member of staff or elected member of the council? ○ Yes ◉ No

10. Materials

Please state what materials (including type, colour and name) are to be used externally (if applicable):

Walls - description:

Description of *existing* materials and finishes:

Description of *proposed* materials and finishes:

To fit a satellite dish to the south facing wall of the building

Are you supplying additional information on submitted plan(s)/drawing(s)/design and access statement? ○ Yes ◉ No

11. Vehicle Parking

Please provide information on the existing and proposed number of on-site parking spaces:

Type of vehicle	Existing number of spaces	Total proposed (including spaces retained)	Difference in spaces

12. Foul Sewage

Please state how foul sewage is to be disposed of:

Mains sewer ☐ Package treatment plant ☐ Unknown ☒

Septic tank ☐ Cess pit ☐

Other

Are you proposing to connect to the existing drainage system? ○ Yes ○ No ◉ Unknown

13. Assessment of Flood Risk

Is the site within an area at risk of flooding? Refer to the Environment Agency's Flood Map showing flood zones 2 and 3 and consult Environment Agency standing advice and your local planning authority requirements for information as necessary. ○ Yes ◉ No

If Yes, you will need to submit an appropriate flood risk assessment to consider the risk to the proposed site.

Is your proposal within 20 metres of a watercourse (e.g. river, stream or beck)? ○ Yes ◉ No

Will the proposal increase the flood risk elsewhere? ○ Yes ◉ No

How will surface water be disposed of?

☐ Sustainable drainage system ☐ Main sewer ☐ Pond/lake

☐ Soakaway ☐ Existing watercourse

14. Biodiversity and Geological Conservation

Is there a reasonable likelihood of the following being affected adversely or conserved and enhanced within the application site, OR on land adjacent to or near the application site:

a) Protected and priority species

○ Yes, on the development site ○ Yes, on land adjacent to or near the proposed development ◉ No

b) Designated sites, important habitats or other biodiversity features

○ Yes, on the development site ○ Yes, on land adjacent to or near the proposed development ◉ No

c) Features of geological conservation importance

○ Yes, on the development site ○ Yes, on land adjacent to or near the proposed development ◉ No

15. Existing Use

Please describe the current use of the site:

Retail outlet

Is the site currently vacant? ○ Yes ◉ No

Does the proposal involve any of the following:

Land which is known to be contaminated? ○ Yes ◉ No

Land where contamination is suspected for all or part of the site? ○ Yes ◉ No

A proposed use that would be particularly vulnerable to the presence of contamination? ○ Yes ◉ No

Application advice

If you have said Yes to any of the above, you will need to submit an appropriate contamination assessment.

16. Trees and Hedges

Are there trees or hedges on the proposed development site? ○ Yes ◉ No

And/or: Are there trees or hedges on land adjacent to the proposed development site that could influence the development or might be important as part of the local landscape character? ○ Yes ◉ No

If Yes to either or both of the above, you will need to provide a full Tree Survey with accompanying plan before your application can be determined. Your Local Planning Authority should make clear on its website what the survey should contain, in accordance with the current 'BS5837: Trees in relation to construction - Recommendations'

17. Trade Effluent

Does the proposal involve the need to dispose of trade effluents or waste? ○ Yes ◉ No

18. Residential Units

Does your proposal include the gain or loss of residential units? ○ Yes ◉ No

19. All Types of Development: Non-residential Floorspace

Does your proposal involve the loss or gain of non-residential floorspace? ○ Yes ○ No ◉ Unknown

20. Employment

If known, please complete the following information regarding employees:

	Full-time	Part-time	Equivalent number of full-time
Existing employees	0	0	0
Proposed employees	0	0	0

21. Hours of Opening

If known, please state the hours of opening for each non-residential use proposed:

Use	Monday to Friday Start Time	Monday to Friday End Time	Saturday Start Time	Saturday End Time	Sunday and Bank Holidays Start Time	Sunday and Bank Holidays End Time	Not Known

22. Site Area

What is the site area? 20.00 sq.metres

23. Industrial or Commercial Processes and Machinery

Please describe the activities and processes which would be carried out on the site and the end products including plant, ventilation or air conditioning. Please include the type of machinery which may be installed on site:

.

Is the proposal for a waste management development? ○ Yes ◉ No

24. Hazardous Substances

Is any hazardous waste involved in the proposal? ○ Yes ◉ No

25. Site Visit

Can the site be seen from a public road, public footpath, bridleway or other public land? ◉ Yes ○ No

If the planning authority needs to make an appointment to carry out a site visit, whom should they contact? (Please select only one)

◉ The agent ○ The applicant ○ Other person

26. Certificates (Certificate A)

Certificate of Ownership - Certificate A

Town and Country Planning (General Development Procedure) Order 1995 Certificate under Article 7

I certify/The applicant certifies that on the day 21 days before the date of this application nobody except myself/ the applicant was the owner (owner is a person with a freehold interest or leasehold interest with at least 7 years left to run) of any part of the land or building to which the application relates.

Title: Miss First name: Kayleigh Surname: Burch-Brodie

Person role: Agent Declaration date: 03/04/2008 ☒ Declaration made

26. Certificates (Agricultural Holdings Certificate)

Agricultural Holding Certificate

Town and Country Planning (General Development Procedure) Order 1995 Certificate under Article 7

Agricultural Land Declaration - You Must Select Either A or B

(A) None of the land to which the application relates is, or is part of an agricultural holding. ◉

(B) I have/The applicant has given the requisite notice to every person other than myself/the applicant who, on the day 21 days before the date of this application, was a tenant of an agricultural holding on all or part of the land to which this application relates, as listed below: ○

Title: Miss First Name: Kayleigh Surname: Burch-Brodie

Person role: Agent Declaration date: 03/04/2008 ☒ Declaration Made

27. Declaration

I/we hereby apply for planning permission/consent as described in this form and the accompanying plans/drawings and additional information. ☒

Date 03/04/2008

Streetwise

Enabled by Ordnance Survey

AREA 2 HA
SCALE: 1:1250
CENTRE COORDINATES: 522559.2 , 106076.4



PLANNING
No.
Application
07 APR 2008

Supplied by Streetwise Maps Ltd
www.streetwise-maps.com
Licence No: 100042435



A2.b3w08

07 APR 2008

HUGHES

HUGHESNET MANAGED SERVICES

PLANNING D... ...ON
PLAN No. Ax/01 84/08
DATE RECEIVED 07 APR 2008

Europe

VSAT Radio Safety application note

Nov 2007, Issue 1.1

HughesNet
Broadband Unbound.

PROPRIETARY NOTICE

All rights reserved. This publication and its contents are proprietary to Hughes Network Systems Ltd. No part of this publication may be reproduced in any form or by any means without the written permission of Hughes Network Systems, Ltd, Sunrise Parkway, Linford Wood, Milton Keynes, MK14 6LS, United Kingdom.

HUGHES, HughesNet, IPOS, SPACEWAY, AiReach, Broadband Unbound, and Connect to the future are trademarks of Hughes Network Systems, LLC. All other trademarks are the property of their respective owners.

While every reasonable effort has been made to have correct service description in this draft document, Hughes reserves the right to correct or amend these. All such service commitments are subject to contract.

Copyright © 2007 Hughes Network Systems Ltd

1.0 Overview

Hughes has looked at the question of radio safety very carefully and is completely satisfied that the energy level is many times lower than the safety limit.

A few people have expressed concern about the possibility of a Hughes VSAT antenna causing personal harm due to the level of radio energy. In fact, both measurements and calculations show that the levels one can be exposed to are well below internationally recognised safety levels by a factor of 20 or more, and even these low levels are hard to achieve.

2.0 The VSAT Installation

2.1 Power calculations

The VSAT radio system can transmit a maximum of 2W power and the smallest antenna we us is "74cm" antenna. Actually this antenna is really elliptical but has the surface area equivalent to a 74cm circular antenna.

Table 1 in the annex of "**Corrigendum to the DIRECTIVE 2004/40/EC OF THE EUROPEAN PARLIAMENT AND OF THE COUNCIL, of 29 April 2004**" defines the maximum exposure levels as 50W/m^2. Table 6 and 7 of the **ICNIRP Guidelines for limiting exposure to time-varying electric, magnetic, and electromagnetic fields** give a limit of 50W/m^2 for occupation and 10W/m^2 for the general public. The following table shows that the power levels are well below this limit with our smallest antenna and most powerful transmit amplifier.

Antenna diameter	0.74 m
Antenna area	0.43 m^2
Power output	2 W
Feed losses	0.5 dB
Power at feed	1.8 W
VSAT power density	4.1 W / m^2
Public limit	10 W / m^2
Safety margin	59%

In actual fact in many installations the system is not transmitting most of the time. Considering typical applications such as;

a) *Lottery or ATM* – during the busier times we might expect 3 transactions per minute which results in 3 to 6 bursts of perhaps 10ms each. This reduces the average power to less than 0.1W/m^2 – safety margin of 99.9%.

b) *Office Internet* – for a busy office of 5 people one can calculate a peak rate of one 25ms burst every 90ms; this reduces the average power to less than 1.2W/m^2 – safety margin of 88%.

© 2007 Hughes Network Systems Ltd.

2.2 Antenna Location

Typically the antenna is mounted between 3m and 10m above the ground which means the antenna beam points some way over where anyone will be, indeed this is a fundamental requirement of a Hughes VSAT installation. This is illustrated in the following diagram.

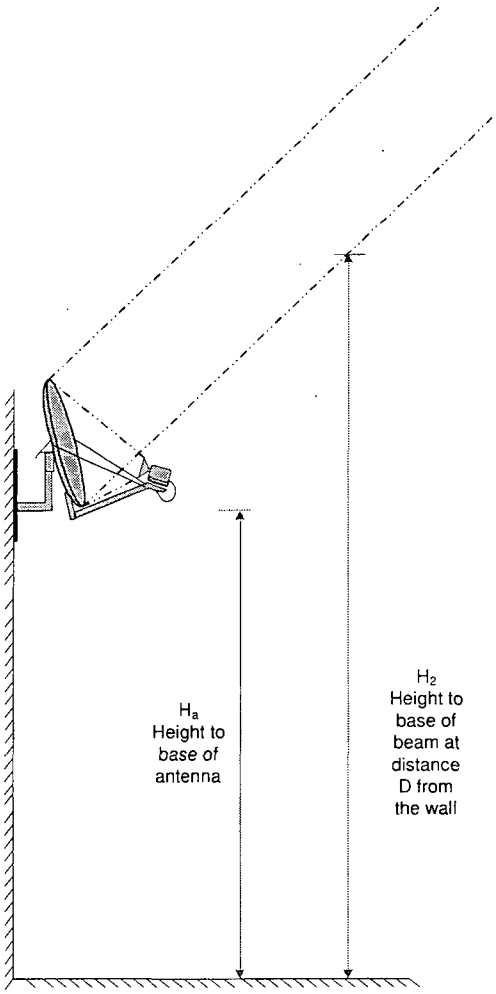

When installed, the antenna seems to be pointing lower in the sky than the direction the radio energy is actually transmitted. This energy tends to stay within a tube the size of the antenna until it reaches something called the collimation point where it will then spread out a little. The collimation point for our antennas will be in excess of 50m from the VSAT antenna.

Over 99.99% of the radio energy is focused in the beam towards the satellite so less than 0.01% of the radio energy can be transmitted to the sides and rear of the antenna.

The following table shows the height of the bottom of the beam above ground level (H_2 in the diagram) for a typical UK antenna elevation of 25º.

Typical elevation angle		25 degrees		
Distance from wall		2	5	10 m
		Height of beam (H_2) in m		
Height H_a of antenna base	2	2.93	5.26	9.93
	3	3.93	6.26	10.93
	4	4.93	7.26	11.93
	5	5.93	8.26	12.93

© 2007 Hughes Network Systems Ltd.

2.3 Safety built in

Hughes VSATs will detect if an object (such as a person on a ladder) is between the antenna surface and the feed as shown below. If an object is detected or the receive signal is otherwise blocked all transmissions will be ceased immediately and automatically.

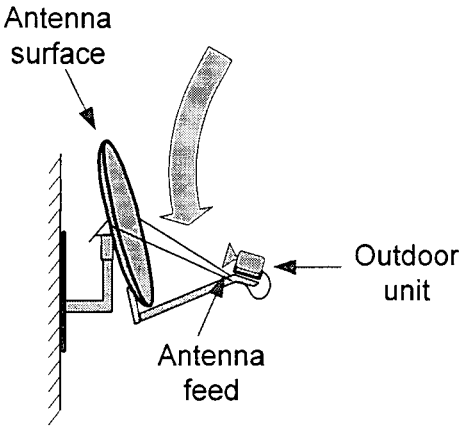

2.4 Measurements

Even with highly sensitive radio energy meters[1] it is not possible to measure any energy more than a few centimetres away from the feed horn.

3.0 Conclusions

By its very nature, a Hughes VSAT antenna;

- Emits low levels of radio energy with a safety factor of between 88% and in excess of 99 % below the safety requirements;
- Focuses 99.9% of this radio energy into a tight beam of about 1m in diameter in to the sky in the direction of the satellite and away from the ground;
- Will stop transmissions when its path is blocked;
- Is always pointed into the sky away from people; and
- Is located well above the ground and is difficult to get close to.

For these reasons Hughes is able to reassure its Customers and their end users of their safety from the HughesNet VSAT radio transmissions.

[1] Where the minimum level they can detect is about 0.1W/m^2.

© 2007 Hughes Network Systems Ltd.

Table of Contents

1.0 Overview 3
2.0 The VSAT Installation 3
2.1 Power calculations 3
2.2 Antenna Location 4
2.3 Safety built in 5
3.0 Conclusion 5

Change control

Issue	Date	By	Notes
Issue 1	1999	S Watts	
Issue 1.1	Nov 2007	S Watts	Updated to reflect branding, move to 2W 74cm and referring to current legislation

PLANNING
PLAN No. Aoc/01 84/08
DATE 07 APR 2008

Design and Access Statement

Address:

Proposal:
To inform all concerned, this planning permission is being sent on behalf of the customer by Hughes Network Systems Ltd, we are responsible for installing dishes for the upgraded National Lottery terminals A short site survey has been carried out suggesting the best place to site our satellite, both sympathetically and to accommodate building access.
We propose the installation of a VSAT satellite dish with which to submit and receive broadband signal to the front of the building. The dish being of minimal proportions, 74cm in diameter and semitransparent mesh to be more sympathetic to the area. The colour is grey at the moment but if requested can easily be sprayed any colour to blend into the area.

Setting:
The property 272 Upper Shoreham Road is shop is placed on the middle of the street. The shop has a brick exterior with a blue fascia.

Siting:
The proposed dish site is facing south towards the main road.

Access:
Thales, our experienced installation company state that site access will be largely unaffected as they will rarely be at one site for more than half a day.

Summary:
The dish is being used for Camelot's new scheme to transmit lottery tickets information, it incorporates safe and cutting edge technology which will be used by Camelot to upgrade and improve their current system. With digital television soon becoming a requirement there will be and already are many similar dishes in the area. I feel this request is reasonable considering the benefits it will give to people over Britain.
I am including pictures of the dish in question that have been sited before to give an idea of scale and design

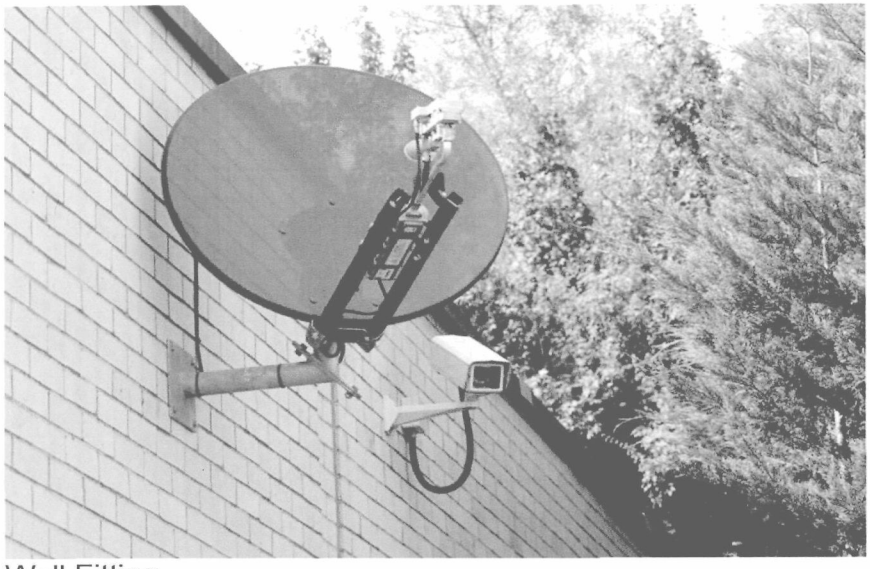

Wall Fitting

NOTES:-

1. PART TO BE FREE FROM BURRS & SHARP EDGES.
2. PART MUST HAVE AN RMS VALUE OF 0.6 OR BETTER.
3. PART MUST BE FREE OF ANY WRINKLES OR TEARS AT ANY POINT ON ANTENNA FACE OR RIM.
4. ANTENNA RIM TO BE UNIFORM ALL THE WAY ROUND THE ANTENNA (TYPICAL RIM DETAIL).
5. ALL DIMENSIONS ARE BEFORE PAINTING.

REFLECTOR DESIGN

DRAWN IN ACCORDANCE WITH BS308

PROJECT NUMBER **1096**

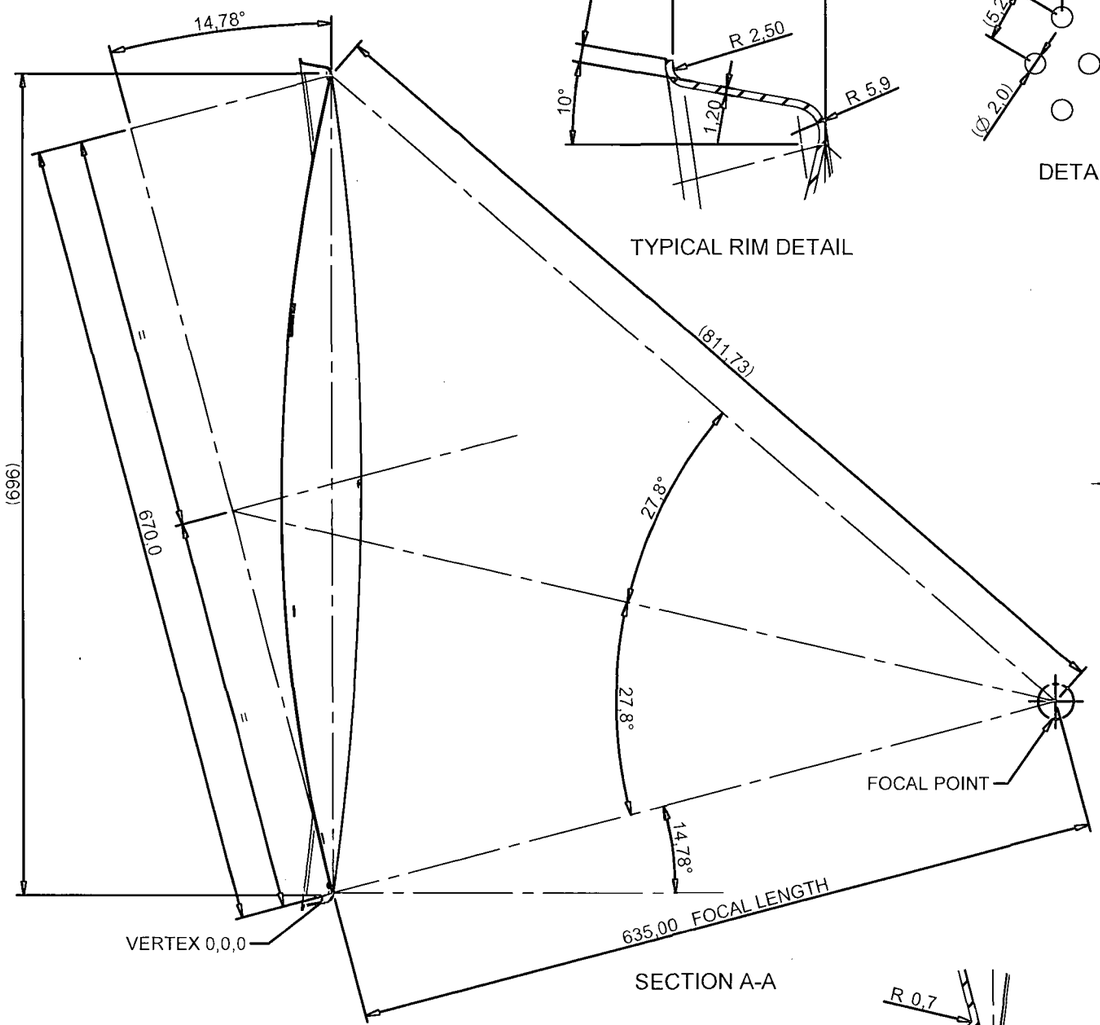

SECTION A-A

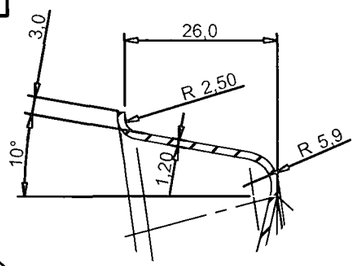

TYPICAL RIM DETAIL

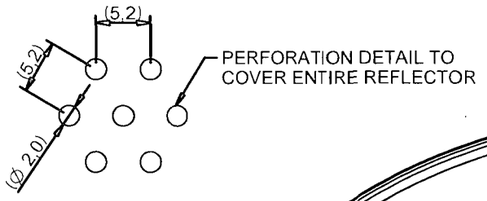

DETAIL D

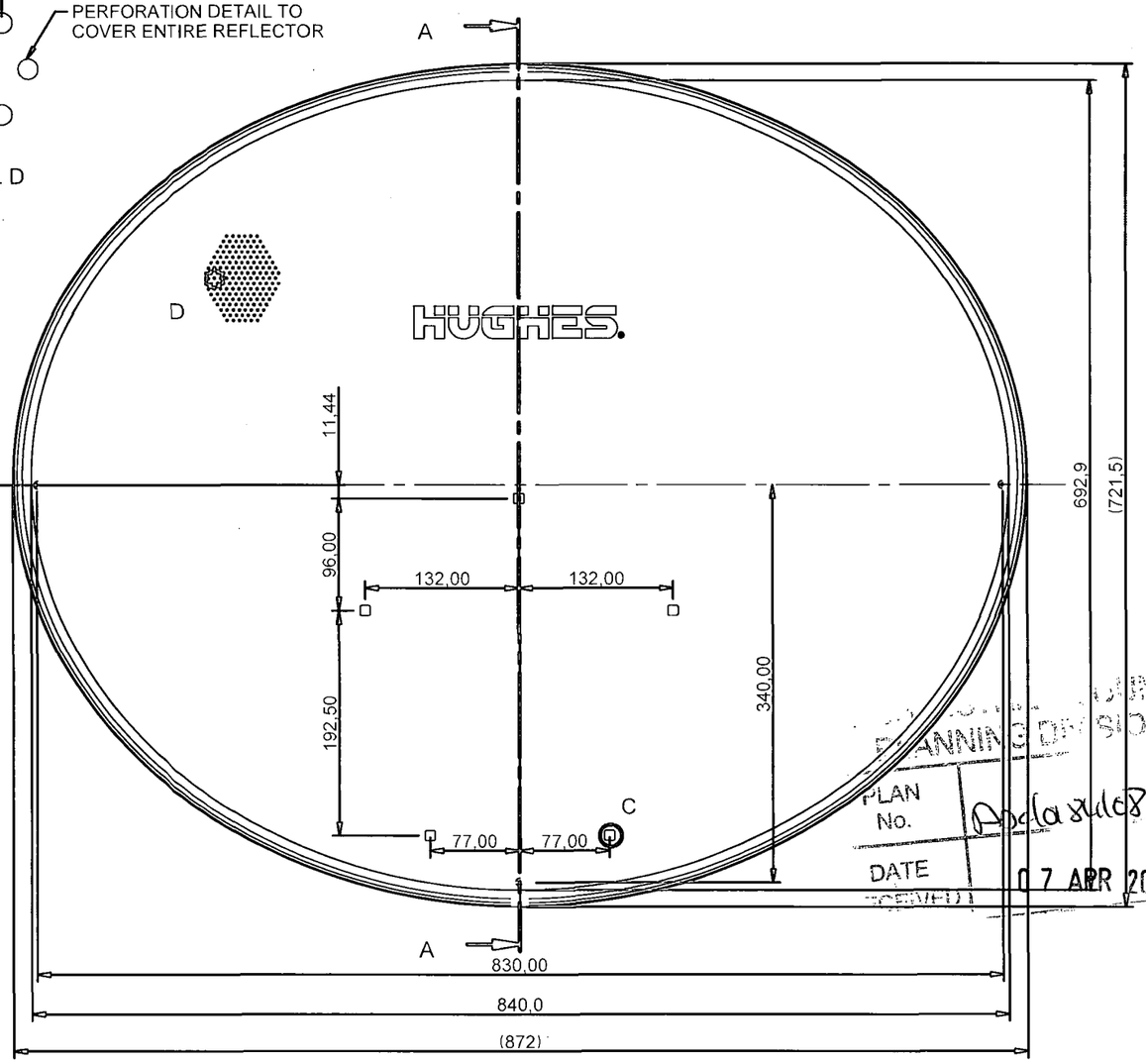

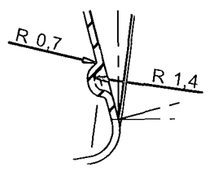

DIMPLE DETAIL

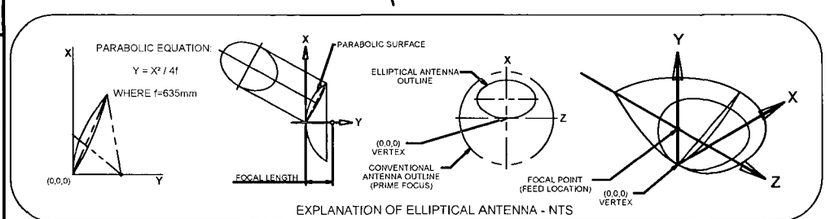

EXPLANATION OF ELLIPTICAL ANTENNA - NTS

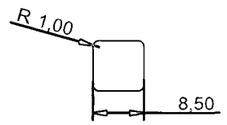

HOLE DETAIL

PLAN No. A04a84/08
DATE 07 APR 2008

ISSUE	MODIFICATION & POSITION	INIT	DATE
A	Initial issue	G.M	26/FEB/08

VOLUME = 659723mm³
SURFACE AREA = 1.10m²
MASS = 5.185kg

RAVEN

All Unstated Tolerances
1mm ± 1.0mm
1.0mm ± 0.4mm
1.00mm ± 0.1mm
1.000mm ± 0.05mm
Angles and Bends 0.5°

THIS DRAWING/SPECIFICATION IS ISSUED ON CONDITION THAT IT IS NOT COPIED, REPRINTED OR DISCLOSED TO A THIRD PARTY IN WHOLE OR IN PART WITHOUT PRIOR WRITTEN CONSENT OF RAVEN MANUFACTURING

A3 SIZE

DRAWN	G.M	DATE	26/FEB/08
CHECKED		SCALE	1:5

TITLE **Ku 74cm PERFORATED REFLECTOR SCALED DRAWING**

RAVEN PART No WP HNS010 — RAVEN Dwg No 1096-03-031

MATERIAL: Material Thickness - 1.2mm; Material Spec. - UK: DC04 to BS EN 10130; Perforation detail: 2mm Hole on a 5,2mm triangular pitch

FINISH: Powder Coat to withstand 700 hours salt spray when tested in accordance with ASTMB117; Paint Colour: RAL 7016

REV A

A3 THIRD ANGLE PROJECTION

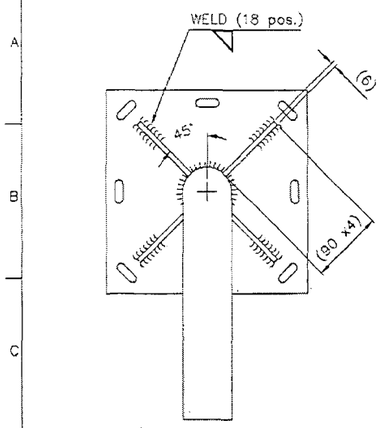

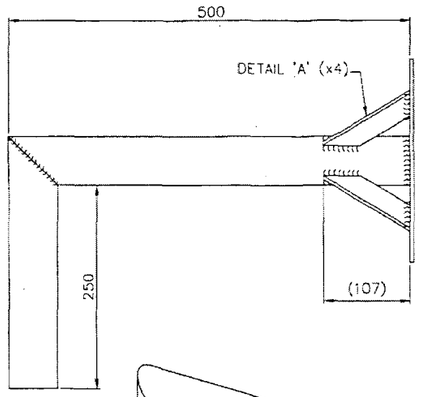

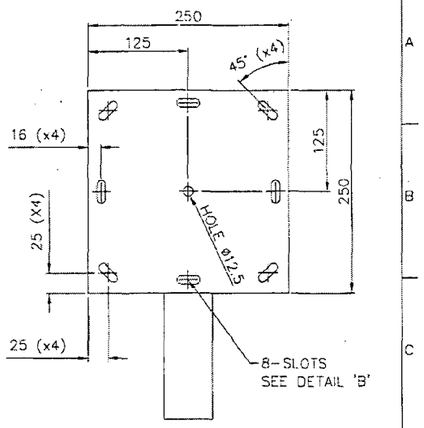

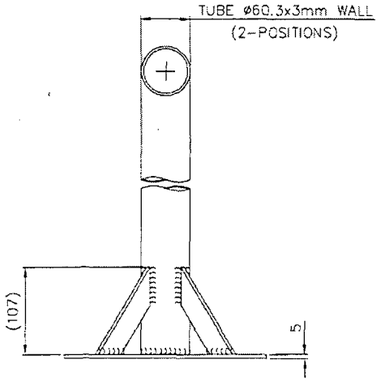

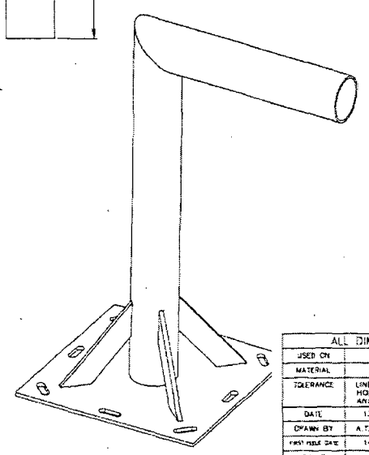

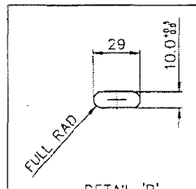

DETAIL 'B'
SCALE 1:2

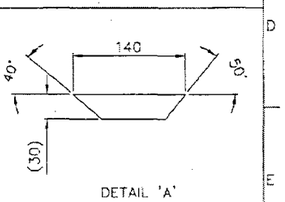

DETAIL 'A'
MATERIAL: 30x6mm STEEL

ALL DIMENSIONS IN MILLIMETRES

		AMENDMENTS			
		ISSUE	DATE	AMENDMENT	BY
USED ON					
MATERIAL	STEEL				
TOLERANCE	LINEAR ±0.3 HOLES ±0.3 ANGULAR 1°				
DATE	13/11/07				
DRAWN BY	A.T.G. HYNES				
FIRST ISSUE DATE	14/11/07				
SCALE	1:4				

This document is confidential and is the exclusive property of Blake U.K. Limited with which the copyright rests. It must not be copied, loaned or transferred, nor must the information it contains be disclosed to any third party without prior written consent of Blake U.K. Limited.

blake uk

Blake U.K. Limited
177/178 Rubond Road, Sheffield, England. S3 9PT
Telephone: +44(0)114 275 9729 , Fax: +44(0)114 275 606
Web Address: www.blake-uk.com

TITLE: WALL MOUNT ø60x500mm

DRAWING No. SAT/8G | ISSUE 01

PLANNING
PLAN No. A/01/8/08
DATE 07 APR 2008