DO NOT SCALE FROM THIS DRAWING

1m 2m 3m 4m 5m 6m 7m 8m 9m 10m

1:50 Scale Bar

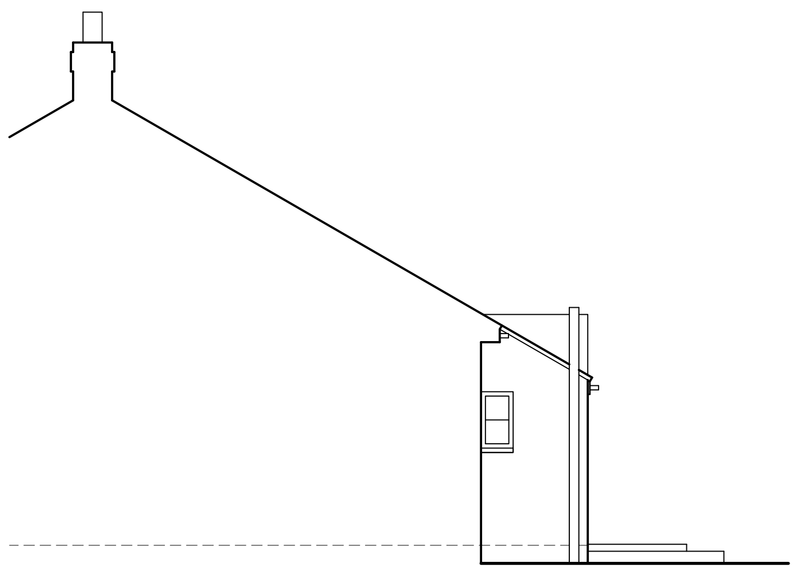

North Elevation (Side)

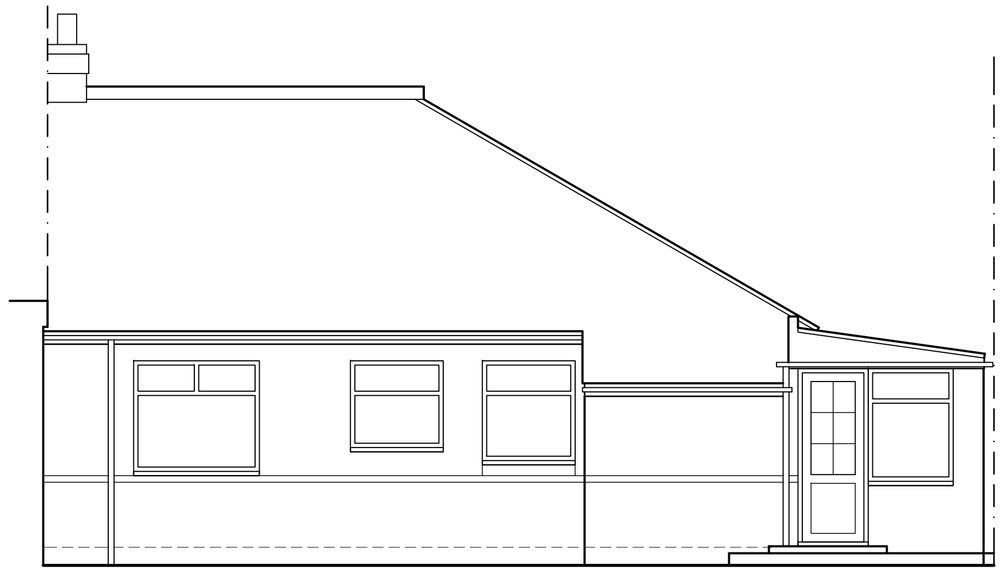

West Elevation (Rear)

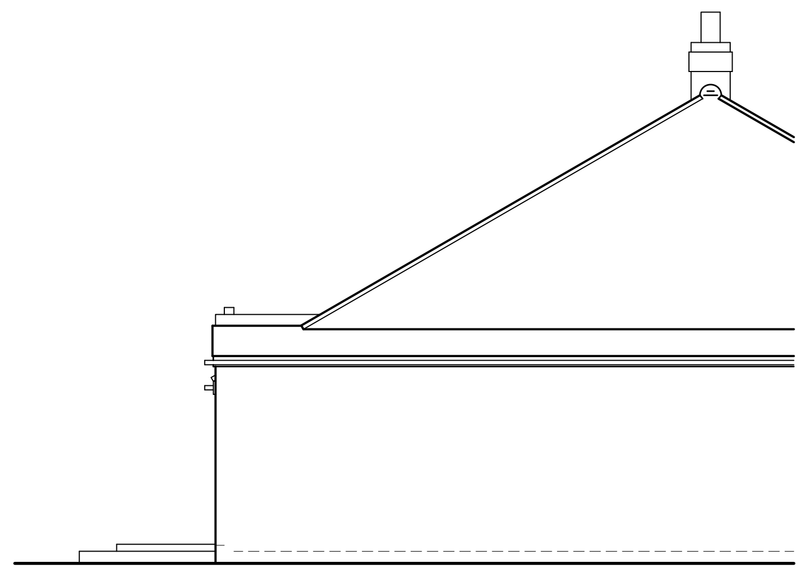

South Elevation (Side)

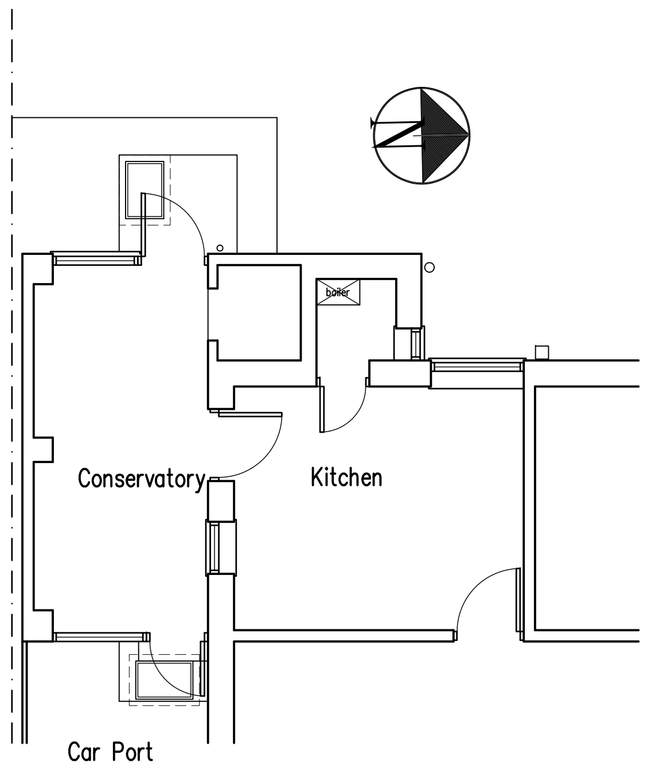

Part Ground Floor Plan

A	02.10.18	Elevations relabelled

Proposed Conversion Of Existing Conservatory & Associated Internal Works at: 6 Greet Road, Lancing, West Sussex

rja Planning & Building Consultants Ltd.
1st Floor
10 High Street
Shoreham-By-Sea
West Sussex BN43 5DA
t: 01273 467297 mob: 07971 375739
e: rex@rjapbc.co.uk web: www.rjapbc.co.uk

Chartered Institute of Architectural Technologists

PROJECT: 6 Greet Road, Lancing, West Sussex

DRAWING TITLE: Existing Floor Plan & Elevations

CLIENT: Mr & Mrs P. Cheal

DWG NO: 18706–02

REVISION: A

SCALE: 1:50 @ A1

DATE: 26.09.18

DRAWN: rex