EMAQ+
Training and Technical Guidance from the Experts

# Control of Odour and Noise from Commercial Kitchen Exhaust Systems

Update to the 2004 report prepared by NETCEN for the Department for Environment, Food and Rural Affairs



Dr Nigel Gibson
5-9-2018

# Copyright

This document is an amendment of the original document prepared by AEA Technology/ NETCEN for Defra published in 2005.

The content of this document which are EMAQ copyright are presented in '*italic text*'. EMAQ is a brand name of Ricardo-AEA Limited.

The content of this amendment which remain under Crown copyright is presented in 'normal text'. It is reproduced and can be re-used under the terms of the Open Government Licence Version 3- http://www.nationalarchives.gov.uk/doc/open-government-licence/version/3/

EMAQ+
The Gemini Building
Fermi Avenue
Harwell IBC
Harwell
Didcot
OXON,OX11 0QR

Telephone: 01235 753620
Email: emaq@ricardo.com

# Foreword

*Local Authorities, commercial kitchen designers and commercial kitchen operators have a vested interest in ensuring that appropriate equipment and techniques are employed to minimise the impact of these activities. Until September 2017 stakeholder were able to rely on the original version of the "Control of Odour and Noise from Commercial Kitchen Exhaust Systems" report, at which point Defra determined that the original published in 2005 was out of date and the guidance was 'withdrawn'.*

*Following Defra's decision to change the status of the original report, EMAQ decided to survey its local authority subscribers to evaluate whether the 2005 report was still relied upon. Of the survey responses received*

- *over 97% of subscribers used the 2005 report.*
- *over 96% of subscribers found the 2005 report useful.*
- *Over 83% of subscribers were aware that the 2005 report had been withdrawn*
- *About 7% of subscribers had taken steps to issue their own guidance*
- *Over 83% of subscribers were in favour of revising and updating the guidance*

*On the basis of the survey responses we took the decision to amend the 2005 report to ensure that the up-to-date technical guidance remained available to our subscribers. In preparing this amended document we applied the following editorial philosophy:*

- *We would rely on the original report structure and text as far as possible. The original document focused around English interpretation of relevant laws and regulations. This has continued in the amendment, however principles embodied in this document could be employed elsewhere.*
- *Where material in the original report was out of date and could not be replicated with more recent data, the original material would be removed.*
- *We would update any reference to latest legislation, standard and other technical material.*
- *We would take into account changes in cooking methods e.g. move toward wood fired cookers.*
- *Where material is available we would include additional 'case study' material to support the use of the guidance*

***Changes made to the original document have been highlighted in italics.***

*As experience of using the Guidance develops, and as further improvement relating to pollution control from commercial kitchen become available, it is anticipated that revisions of this document will become necessary. EMAQ is particularly keen to hear of examples of good assessment and design practice in this area so they can be incorporated in future versions of this document. All comments and further information in relation to this topic should be sent to emaq@ricardo.com.*

*The EMAQ document aims to be the authoritative voice for the provision of technical guidance on various aspects of pollution management by maintaining, enhancing and promoting the highest standards of working practices in the field and for the professional development of those who undertake this work. Membership of EMAQ is mainly drawn from Local Authority professionals working within the fields of pollution science, pollution assessment and pollution management.*



Dr Nigel Gibson

# Best Practice for Design and Operation of Commercial Kitchen Ventilation Systems: Performance Requirements

**Minimum Ventilation Rates**

- An internal ambient air temperature of 28°C maximum
- Maximum humidity levels of 70%
- Internal noise level should be between NR40 – NR50
- Dedicated make up air system to be approximately 85% of the extract flow rate
- Minimum air change rate of 40 per hour (bases on canopy and general room extraction)
- *Extract flow rates for a commercial kitchen should be calculated using the thermal convection method only, as this overcomes heat and odour variation between different types of cooking appliances. Other less reliable methods remain available.*

**Minimum Requirements for Canopy**

**Velocity requirements:**

- Light loading – 0.25 m/s (applies to steaming ovens, boiling pans, bain maries and stock pot stoves)
- Medium loading – 0.35 m/s (applies to deep fat fryers, bratt pans solid and open top ranges and griddles)
- Heavy loading – 0.5 m/s (applies to chargrills, mesquite and specialist broiler units)

**Sizing:**

- *Ideally, the plan dimensions of the canopy shall always exceed the plan dimensions of the catering equipment by a minimum of 250 mm on each free side*
- *This should be increased to 600 mm in front of combination steaming ovens to cope with the steam or fumes released when the doors of the appliance are opened. Solid fuel appliances must have an overhang of 300 mm from the door open position*

**Materials:**

- A material that would comply with the food hygiene requirement is stainless steel

**Grease Separation:**

- *The grease extracted by the separators shall be collected and removed so that it will not accumulate in either the canopy plenum or the ductwork system, or fall back onto the cooking surface*
- *The separator shall be constructed so that there are no sharp edges or projections and shall be easily removable for regular cleaning*
- *Primary filters that retain grease within the filtration matrix until cleaned, shall not be used (not to be confused with those designed with purpose made integral collection reservoirs)*

**Minimum Requirements for Duct Work**

- All duct work should be Low Pressure Class 'A' and constructed in accordance with BESA Specification DW/144 with a minimum thickness of 0.8 mm
- Duct velocities should be as follows:

| | Supply (m/s) | Extract (m/s) |
|---|---|---|
| Main runs | 6 – 8 | 6 – 9 |
| Branch runs | 4 – 6 | 5 – 7 |
| Spigots | 3 – 5 | 5 – 7 |

- All internal surfaces of the ductwork should be accessible for cleaning and inspection. Access panels should be installed at 2.0 m centres and should be grease tight using a heat proof gasket or sealant
- Duct work should not pass through fire barriers
- Where it is not possible to immediately discharge the captured air, fire rated duct work may be required

**Minimum Requirements for Fans**

Fans should be selected to handle the design resistance with an additional 10% airflow and 20% pressure margin allowed to suit possible extensions to the original kitchen plan.

Backward curved centrifugal, mixed flow or axial flow impellers are preferred as they are less prone to unbalance and are more easily maintained and cleaned due to their open construction. Fixed or adjustable metal impellers with a robust and open construction shall be used,

*Care shall always be taken with the location of the supply and extract fans to ensure that there is sufficient space for regular cleaning and maintenance. Limited space shall not restrict selection of the correct fan.*

Drain holes should be fitted.

*For fans serving canopies above solid fuel burning appliances, the motor must be out of the airstream and impellers must have metal blades.*

**Minimum Requirements for Odour Control**

Objectives

- for new premises or premises covered by planning conditions restricting the impact of odour the system shall be designed to prevent harm to the amenity.
- for existing premises not covered by planning conditions restricting the impact of odour, the system shall be designed to avoid statutory nuisance and shall comply with the principles of Best Practical Means.
- *The design of a control system should recognise that there are two phases of contamination in a kitchen exhaust; particulate (grease, smoke, hydrocarbons/VOC) and gaseous (odour). The particulate phase needs to be removed prior to dealing with the gaseous phase.*

To achieve these objectives the odour control system shall include an adequate level of:

1. *Particulate and* odour control; and
2. stack dispersion.

The overall performance of the odour abatement system will represent a balance of 1 and 2.

**Discharge stack**

The discharge stack shall:

1. Discharge the extracted air not less than 1 m above the roof ridge of any building within *15* m of the *vent serving* the commercial kitchen*. Additional odour control measures may still be required depending on the cooking type and frequency.*
2. If 1 cannot be complied with for planning reasons, then the extracted air shall be discharged not less than 1 m above the roof eaves or dormer window of the building housing the commercial kitchen. *A higher level of odour control measures than those required in part 1 may be required.*
3. If 1 or 2 cannot be complied with for planning reasons, then *higher level of odour control measures than those required in part 1 or 2 may be required*.

**Odour arrestment plant performance**

Low to medium level control may include:

1. Fine filtration or ESP followed by carbon filtration (carbon filters rated with a 0.1 second residence time).
2. Fine filtration followed by counteractant/neutralising system to achieve the same level of control as 1.

High level odour control may include:

1. Fine filtration or ESP followed by carbon filtration (carbon filters rated with a 0.2 - 0.4 second residence time).
2. Fine filtration or ESP followed by UV ozone system to achieve the same level of control as 1.

Very high level of odour control may include:

1. Fine filtration or ESP followed by carbon filtration (carbon filters rated with a 0.4 – 0.8 second residence time).
2. Fine filtration or ESP followed by carbon filtration and by counteractant/neutralising system to achieve the same level of control as 1.
3. Fine filtration or ESP followed by UV ozone system to achieve the same level of control as 1.

*In some instances where very high levels of control are required combinations or sacrificial levels of filtration may be employed.*

Maintenance must be carried out to ensure these performance levels are always achieved.

**Minimum Requirements for Noise Control**

For new premises or premises covered by planning conditions restricting the impact of noise the system shall be designed to prevent an acoustic impact on the external environment and therefore harm to the amenity, as well as ensuring that noise exposure of kitchen staff does not constitute an occupational noise problem (see Control of Noise at Work Regulations 2005).

For existing premises not covered by planning conditions restricting the impact of noise, the system shall be designed to avoid statutory nuisance and shall comply with the principles of Best Practicable Means.

To achieve these objectives the noise control system shall include:

- control of noise at source to the greatest extent possible; and
- control of noise to the environment by taking acoustic considerations into account within duct, grille and termination design.

The control system should meet the requirements laid down in *BS4142: 2014* "Method for Rating and assessing industrial and commercial sound" or local standards where they exist (whichever is more appropriate).

*Where in-line attenuators are used they shall be constructed so that there is no grease impregnation into the acoustic media. A protective membrane shall be specified for this purpose or this will reduce the design performance of the attenuator. This should be taken into account when selection is made.*

*It may be necessary to apply additional acoustic controls such as in line silencer or splitter attenuator after grease removal stages. Care should be taken to ensure that all such elements are capable of being accessed for cleansing purposes.*

**Minimum Requirements for Fire Suppression**

Proprietors of commercial kitchens are under a duty to ensure that the fire precautions meet the requirements of *The Regulatory Reform (Fire Safety) order 2005.*

***Minimum Requirements for Wood Burning Appliances***

*When serving a canopy above a wood burning appliance, the complete extract ductwork system shall be:*

- *Manufactured from stainless steel*
- *Constructed to DW/144 specification*
- *Have a minimum of 2-hour fire rating, tested and assessed to the latest version of BS476 part 24*

*Surface temperatures can reach in excess of 250°C so in these instances, in accordance with Building Control, the ductwork should be insulated to avoid heat transfer to adjacent combustible materials.*

*Solid Fuel Appliances should be considered separately when designing a safe and effective ventilation/control system.*

**Maintenance**

Proprietors of commercial kitchens have a duty to ensure that the ventilation system serving their kitchen are maintained and operated effectively. Good maintenance is a prerequisite for ensuring that a system complies with Best Practicable Means under statutory nuisance provision and will form a key element of any scheme designed to minimise harm to the amenity under planning regulation. Good maintenance is required by the food hygiene regulations and will also minimise the risk of fire *and minimise noise*. The recommended cleaning period for grease extract system ductwork is:

| Grease loading | | Daily usages | Cleaning interval (months |
|---|---|---|---|
| *Heavy use* | *Heavy/continuous grease production* | *6 – 12 hours*<br>*12 -16 hours* | *3-6 months*<br>*2-3 months* |
| *Moderate use* | *Moderate grease production* | *6 – 12 hours*<br>*12 -16 hours* | *6-12 months*<br>*3-4 months* |
| *Light use* | *No significant grease production* | *6 – 12 hours*<br>*12 -16 hours* | *12 months*<br>*6 months* |

**Recommendations for maintenance of odour control system include:**

- System employing fine filtration and carbon filtration
  - Change fine filters every two weeks
  - Change carbon filters every 4 to 6 months
- Use a system employing ESP and other in line abatement, typically
  - *ESP systems cleaned, and sump emptied on a four weekly basis.*
  - *UV-C systems used in line, cleaned on a four weekly basis*
  - *Side Stream UV-C systems, cleaned every 3 to 6 months.*
  - *Carbon filters with ESP pre-treatment change carbon filter every 6 to 12 months.*

*These time frames may increase or reduce for extreme or very light applications.*

# Abbreviations Used

| | |
|---|---|
| BCO | Building Control Officer |
| *BESA* | *Building Engineering Services Association* |
| BS | British Standard |
| BSRIA | Building Services Research and Information Association |
| CIBSE | Chartered Institution of Building Services Engineers |
| CIEH | Chartered Institution of Environmental Health |
| Defra | Department for Environment, Food and Rural Affairs |
| EHO | Environmental Health Officer |
| ESP | Electrostatic precipitator |
| HSE | Health and Safety Executive |
| HVAC | Heating, Ventilation and Air Conditioning |
| PO | Planning Officer |
| UV | Ultra Violet |
| *VOC* | *Volatile organic carbon* |

# Glossary of Terms

| | |
|---|---|
| **ACCESS DOOR** | A door providing access for maintenance or inspection purposes. |
| **AIR CONDITIONING** | A form of air treatment whereby temperature, humidity, ventilation, and air cleanliness are all controlled within limits determined by the requirements of the air-conditioned space. |
| **AIR DIFFUSER** | A supply air terminal device usually placed in the ceiling and generally of circular, square or rectangular shape composed of divergent deflecting parts. |
| **AIR FILTER** | A mechanical device for removing particulate contaminants from an air stream. |
| **AIR HANDLING UNIT** | The assembly of air treatment equipment within one casing. It may include filters, fans, humidifier, cooler battery and associated controls. |
| ***BAG FILTER*** | *A filter with varying degrees of efficiency categorised by Eurovent as typically M5 to M6 and F7 to F9.* |
| **BALANCING** | The process of adjusting the rates of air flow to achieve specified values. |
| **CARBON FILTER** | An air cleaning device, normally using activated carbon for removing gaseous chemicals. |
| **CASSETTE UNIT** | A type of split packaged air conditioning unit in which the internal unit is mounted in the ceiling (recessed into the ceiling void). |
| **COIL** | A heat-exchanging battery made of tubing formed into a compact shape by spiral or serpentine configuration. |
| **DAMPER** | A blade or set of blades that can be moved within a duct in order to control air flow rate. |
| **DETERGENT** | A cleansing agent, which may be solvent or water based, for removing dirt. |
| **DIRT** | Dry dust and debris |
| **DIRT TRAPS** | Those parts of the system prone to heavy dirt accumulation. |
| **DISINFECTION** | A process to reduce microorganisms to an acceptable level. |
| **DUCT** | An enclosure of any cross-sectional shape, but generally circular or rectangular, through which air can flow. |
| **DUCTWORK** | A system of ducts for distribution or extraction of air. |
| ***ELECTROSTATIC PRECIPITATOR (ESP)*** | *A high efficiency filter using electrical charge to remove and trap grease and smoke.* |
| **EXHAUST HOOD OR CANOPY** | A hood associated with an extract system into which contaminated air and entrained solid particles are accelerated. |
| **FAN** | A rotary machine for propelling air or gas. |
| **FINE FILTER** | A particulate/grease filter normally located after a grease filter, is usually present to protect a carbon filter or ESP. |

| | |
|---|---|
| **FIRE DAMPER** | A mobile closure within a duct, which is operated automatically or manually and is designed to prevent the passage of fire. |
| **FUNGI** | Plants without chlorophyll, including moulds and mildew. |
| **FUSIBLE LINK** | A safety device having a low temperature melting point release mechanism. |
| **GREASE FILTER** | A washable filter normally located within the hood over kitchen appliances. |
| **GRILLE** | A mesh or lattice entry or termination fitted to a duct. |
| **HAZARD** | A situation or source of potential harm, which if realised, could result in injury or ill health to humans, or damage to the natural or built environment. |
| **HEPA AIR FILTER** | High Efficiency Particulate Arrestance filter. |
| ***PANEL FILTER*** | *A filter with varying degrees of efficiency categorised by Eurovent as typically G1 to G4* |
| **PATHOGEN** | Any disease-producing microorganism. |
| **PLENUM** | A void forming part of the air distribution system. |
| ***UV-c IN THE CANOPY*** | *An arrangement of UV lamps emitting c band radiation and Ozone in the kitchen extract canopy.* |
| ***UV-c IN LINE*** | *A device employing UV lamps emitting c band radiation and Ozone fitted in line in the ducting after ESP or fine filtration.* |
| ***UV-c SIDE STREAM*** | *A device employing UV lamps emitting c band radiation and Ozone fitted externally (in clean air) from the air stream injecting into the ducting.* |

# Table of contents

**1 Introduction ..... 1**
1.1 Preamble ..... 1
1.2 Report Structure ..... 1

**2 Background ..... 3**
2.1 Odour ..... 3
2.1.1 Odour and nuisance ..... 3
2.1.2 What is odour? ..... 3
2.1.3 Attributes of odour ..... 3
2.1.4 Effects of odour ..... 4
2.1.5 Physical properties and odour perception ..... 4
2.1.6 Factors that influence magnitude of an odour problem ..... 4
2.1.7 Characteristics of different food types and cooking appliances ..... 5
2.2 Noise ..... 8
2.2.1 Noise and nuisance ..... 8
2.2.2 Properties of noise ..... 8
2.2.3 Types of noise in commercial kitchens ..... 10
2.3 Typical Problems Encountered with Commercial Kitchen Ventilation Systems ..... 11

**3 Regulation of Kitchen Ventilation Systems ..... 13**
3.1 Role of Council Officers ..... 13
3.1.1 Regulation in response to submission of a planning application ..... 13
3.1.2 Regulation in response to a noise and/or odour complaint ..... 14
*3.1.3 Assessment of whether causing statutory nuisance* ..... 15
3.1.4 Regulation in response to a change of use not requiring planning permission ..... 15
3.2 Regulation Governing Design and Performance of Ventilation Systems ..... 16
3.2.1 Relevant legislation ..... 16
3.2.2 Industry guidance/standards ..... 19
3.2.3 Regulations/guidance relating to fire safety ..... 19
*3.3 Additional case study material* ..... 19

**4 Review of Common Types of Kitchen Ventilation Systems ..... 21**
4.1 Overview ..... 21
4.2 Extraction Canopy ..... 23
4.2.1 What ventilation systems are used ..... 23
4.2.2 Determining ventilation rates ..... 24
4.2.3 Make-up air ..... 24
4.2.4 Hoods/extract points ..... 25
4.2.5 Ventilated Ceilings ..... 29
*4.2.6 Specific requirements for solid fuel catering equipment* ..... 30
4.2.7 Materials of construction of canopies ..... 30
4.3 Duct Work ..... 31
4.4 Dampers ..... 32
4.5 Fans ..... 32
4.6 Access Panels for Cleaning ..... 35
4.7 Odour Abatement Tools ..... 35
*4.7.1 Pre-conditioning of extracted air* ..... 36
4.7.2 Coarse or Grease separation ..... 36
4.7.3 Fine filtration ..... 41
4.7.4 Electrostatic precipitation ..... 43
4.7.5 Adsorption ..... 45

4.7.6 In-line oxidation systems ..... 46
4.7.7 Odour neutralising and counteracting agents ..... 46
4.7.8 Stack ..... 47
4.7.9 Package abatement plant with treated air recirculation ..... 51
4.7.10 Summary of grease and odour mitigation measures ..... 52
4.8 Noise Attenuation ..... 54
4.9 Fire Suppression ..... 56
4.10 Financial Considerations ..... 57
4.10.1 Cost of odour abatement equipment ..... 57
4.10.2 Relative cost effectiveness of odour abatement systems. ..... 60
4.10.3 Cost of noise abatement equipment ..... 61
4.10.4 Relative cost effectiveness of odour abatement systems ..... 61
4.11 Installation ..... 62

**5 Maintenance Requirements ..... 63**
5.1.1 Consequence of Poor Maintenance ..... 63
5.1.2 Recommendations for maintenance ..... 64
5.1.3 Maintenance Activities ..... 65
5.1.4 Monitoring Methods ..... 66

**Appendices**
Appendix 1 Summary of Odour and Noise Problems Encountered by Local Authority Environmental Officers – *Not reproduced*
Appendix 2 Information Required To Support Planning Application For Commercial Kitchen
Appendix 3 Risk Assessment for Odour
Appendix 4 Factors to take into account in noise assessment

# 1 Introduction

## 1.1 Preamble

Problems associated with nuisance odour and noise emissions from commercial kitchen exhausts are very common, particularly in urban areas where housing may be adjacent to or even immediately above catering premises. These premises might include pubs, clubs, restaurants and takeaways that may be open until the early hours of the morning.

Responsibility for the enforcement of statutory controls available to Local Authorities is shared between a number of regulatory functions;

- An authority's Building Control Officer would usually handle building Regulation requirements relating to the structural safety of installations such as high exhaust flues;
- Planning issues relating to new premises, and to the acceptability and positioning of new ventilation systems that involve the provision of a large flue, are likely to require planning consent, the application for which would be submitted to the Local Planning Authority;
- Environmental Health Officers/*Technical Officers* providing advice on the odour and noise control aspects of any planning application to the Planning Officers; and
- Environmental Health Officers/Technical Officers would deal with any complaints of statutory nuisance arising from the smell or noise of a kitchen extraction system.

Many kitchen extraction systems are well designed, well maintained and seldom cause nuisance problems. Others can provide a significant and recurring source of nuisance. Currently, there is little advice available to the enforcing officers on what measures may constitute best practicable means for abating the nuisance. Apart from the statutory nuisance aspects, kitchen exhaust system design may also:

- influence the work place environment where temperature, *pollutant exposure* and fume control is important; or
- have fire safety and hygiene implications where systems are poorly maintained.

*This guidance document is a revised and updated version of the original document,* originally prepared by Netcen, an operating division of AEA Technology, for Defra, and through it the Devolved Administrations of the Scottish Executive, the National Assembly for Wales, and the Department of the Environment in Northern Ireland to provide clear guidance to the regulation process.

***Amendments made to the original text are highlighted in italics.***

## 1.2 Report Structure

This report is structured as follows:

**Best Practice Guide** summarises the best practice for the design and operation of commercial kitchen ventilation systems and the control of grease, odour and noise emissions.

**Section 2** provides:

- a brief overview of odour and noise, illustrating why these parameters can be annoying to members of the public living in the vicinity of commercial kitchens;
- an indication of the composition of the emissions arising from commercial kitchens and types of cooking which can cause odour;
- an indication of the sources of noise from a commercial kitchen; and
- the findings of a survey of Local Authority Officers.

**Section 3** provides an overview of the roles of key Local Authority Officers who deal with proposed and existing kitchens. The overview summarises the legislative tools available for regulating and setting standards for commercial kitchen design and operation.

**Section 4** reviews the range of ventilation systems available, identifying the types of equipment available for the kitchen extraction system through to the control of grease, odour and noise emissions. The review also includes a cost benefit appraisal of remediation measures.

**Section 5** presents a practical guide for maintaining kitchen ventilation systems and the associated control equipment.

This report relates to ventilation/extraction systems in all types of premises where hot food is prepared for immediate consumption (other than reheating in microwave ovens).

The views expressed in the *original or amended guidance* were/are not necessarily those of the *organisation commissioning the work*. Its officers, servants or agents accept no liability whatsoever for any loss or damage arising from the interpretation or use of the information, or reliance upon the views contained herein.

All references to regulations, standards and guidelines relate to that current at the time of publication. The reader should ensure that they are in possession of the most recent advice when using this document.

# 2 Background

## 2.1 Odour

***Technical reference material on background to odour:***

*Defra, Odour Guidance for Local Authorities (March 2010). [Withdrawn September 2017]*

*Environment Agency, "H4 Odour Management" (March 2011).*

*SEPA, "Odour Guidance" (January 2010).*

*Institute of Air Quality Management "Guidance on the assessment of odour for planning" (April 2014)*

### 2.1.1 Odour and nuisance

Objectionable and offensive odours can cause significant adverse effects on people's lives and wellbeing. In the original guidance reference was made to the results of a CIEH which indicated that:

- *Odour complaints were received at a rate of about 350 per million population;*
- *There were about 4000 to 5000 premises subject to complaint;*
- *On this basis abatement notices were served on a small number of premises that were subject to complaint;*
- *Where prosecutions were taken these were generally successful.*

*The authors of this revised guidance have no reason to believe that this position illustrated by the CIEH data set has changed.*

*More recent data on statutory nuisance complaints in Scotland found that 43,222 complaints were received by Scottish Authorities between August 2016 and July 2017. Of this total 5% of complaints were related to air pollution (including odour).*[1]

*It is anticipated that odour problems associated with commercial kitchens will form only a small proportion of the complaints received but will form a significant proportion of the 'premises subject to complaint'.*

### 2.1.2 What is odour?

Odour is perceived by our brain in response to chemicals present in the air we breathe. Odour is the effect that those chemicals have upon us. Humans have sensitive senses of smell and they can detect odour even when chemicals are present in very low concentrations.

Most odours are a mixture of many chemicals that interact to produce what we detect as an odour. Odour-free air contains no odorous chemicals whilst fresh air is usually perceived as being air that contains no chemicals or contaminants that could cause harm, or air that smells "clean". Fresh air may contain some odour, but these odours will usually be pleasant in character such as the smell of freshly mown grass or sea spray.

Different life experiences and natural variation in the population can result in different sensations and emotional responses by individuals to the same odorous compounds. Because the response to odour is synthesised in our brain, other senses such as sight and taste, and even our upbringing, can influence our perception of odour and whether we find it acceptable, objectionable or offensive.

### 2.1.3 Attributes of odour

There are four interlinked (sensory) characteristics that are used to describe an odorous emission. These are as follows:

1. **Hedonic tone** is a judgement of the relative pleasantness or unpleasantness of an odour made by assessors in an odour panel. Outside of a laboratory setting this parameter can be subject to substantial variation between individuals. Some odours may be pleasant when weak but unpleasant when strong, or when exposure is frequent.

[1] https://www.rehis.com/story/over-100-statutory-nuisance-complaints-day-scotland-research-reveals [accessed on 10 August 2018)

2. **Quality/Characteristic** is a qualitative attribute, which is expressed in terms of “descriptors” (e.g. “oily”, “greasy” or “spicy”). This can be of use when establishing an odour source from complainants’ descriptions. Alternatively, it may be possible to identify key chemical components by a description of their specific odour.
3. **Concentration** is the “amount” of odour present in a sample of air. It is usually expressed in terms of odour units per cubic metre and is determined using dynamic dilution olfactometry.
4. **Intensity** may vary between faint to strong. Perceived intensity is the magnitude (strength) of perception of an odour. Increases or decreases in concentration of an odour do not always produce a corresponding proportional change in the odour strength as perceived by the human nose. This can be important for control where an odour has a strong intensity at low concentration as even a low residual odour may cause odour problems.

Odour quality, hedonic tone and concentration influence the perceived odour intensity (and potential for annoyance), although the response to a particular odour will vary between individuals.

### 2.1.4 Effects of odour

The main concern with odour is its ability to cause an effect that could be considered ‘objectionable or offensive’. An objectionable or offensive effect can occur where an odorous compound is present in very low concentrations, usually far less than the concentration that could cause adverse effects on the physical health of humans or impacts on any other part of the environment.

Effects that have been reported by people include nausea, headaches, retching, difficulty breathing, frustration, annoyance, depression, stress, tearfulness, reduced appetite, being woken in the night and embarrassment in front of visitors. All of these contribute to a reduced quality of life for the individuals who are exposed.

### 2.1.5 Physical properties and odour perception

How an odour is perceived, and its subsequent effects are not straightforward. The human perception of odour is governed by complex relationships and its properties need to be considered when assessing potential odour effects.

The perception of the intensity of odour in relation to the odour concentration is not a linear but a logarithmic relationship. This means that if the concentration of an odour increases tenfold, the perceived increase in intensity will be by a much smaller amount.

Interactions between mixtures of odorous compounds can also occur. These are known as synergistic effects. An example of a synergistic effect is where one odorous compound disguises or masks the presence of other compounds. As the odour concentration reduces through dilution the nature of the odour may change as different compounds dominate the effect. For example, certain emissions treated with incorrect levels of odour counteracting agents has been observed to have distinctly different odour characteristics at source than when diluted downwind. The odour intensity experienced by an observer is, in general, not equivalent to the sum of the intensities of the component odorous compounds. The perceived intensity may be greater or less than the components depending on the synergistic effects of the compounds present.

Exposure to an odour can result in people becoming desensitised so that they can no longer detect the odour even though the odorous chemical is constantly present in the air. This is sometimes known as olfactory fatigue. For example, people working in an environment with a persistent odour are often unaware of its presence and may not be aware if the odour is having an impact on the surrounding community.

### 2.1.6 Factors that influence magnitude of an odour problem

Factors that influence the control of odour from commercial kitchens include:

| | |
|---|---|
| **Size of the cooking facility:** | This influences the intensity of the odour and volume of ventilation air to be handled. |
| **Type of food prepared:** | This affects the chemical constituents within the ventilation air. |
| **Type of cooking appliances used:** | This dictates the level of fat, water droplets and temperature within the ventilation air. |

### 2.1.7 Characteristics of different food types and cooking appliances

The odour, grease and *smoke* characteristics from a range of commercial kitchen types are summarised in Table 1. Table 2 summarises the grease and moisture characteristics anticipated from a range of kitchen appliances.

**Table 1: Odour and grease characteristics arising from a range of commercial kitchens**

| | | Odour Potential[1] | | | | Grease Content | | | | *Smoke Content* | | | |
|---|---|---|---|---|---|---|---|---|---|---|---|---|---|
| Catering Establishment | Description | Low | Moderate | High | Very High | Low | Moderate | High | Very high | *Low* | *Moderate* | *High* | *Very high* |
| Tea shop | | □ | | | | □ | | | | □ | | | |
| Café serving all day breakfasts | Oil, cooking meat | | □ | | | | | □ | | | □ | | |
| Pizza restaurant gas or electric cooking | Herb | | □ | | | | □ | | | □ | | | |
| *Pizza Restaurant wood fired cooking* | *Herbs / garlic / wood* | | | □ | | | □ | | | | | □ | |
| Steakhouses | Fat | | □ | | | | □ | | | | | □ | |
| French | Herbs/garlic | | □ | | | | □ | | | | □ | | |
| Italian | Herbs/garlic | | □ | | | | □ | | | | | □ | |
| Most pubs | Fat | | □ | | | | □ | | | | □ | | |
| Chinese | Ginger, spices, oil | | □ | | | | | □ | | | □ | | |
| Japanese | Spices, oil | | □ | | | | | □ | | | □ | | |
| Cantonese | Spices, oil | | □ | | | | | □ | | | □ | | |
| Indian | Spices, oil | | | □ | | | | □ | | | □ | | |
| Thai | Spices, oil | | | □ | | | | □ | | | | □ | |
| *Turkish Restaurant* | *Fat, cooking meat, spices* | | | □ | | | | □ | | | | | □ |
| Vietnamese | Spices, oil | | | □ | | | | □ | | | □ | | |
| Kebab houses | Fat, cooking meat | | | □ | | | | □ | | | | | □ |
| Fried chicken | Oil, cooking meat | | | | □ | | | | □ | | □ | | |
| Pubs (large turnover of deep-fried food) | Oil, cooking meat | | | | □ | | | | □ | | □ | | |
| Fish and chips | Oil, | | | | □ | | | | □ | □ | | | |
| Fast food/burger | Oil, cooking meat | | | | □ | | | | □ | | □ | | |
| *Casual Dining – Burgers/ Chicken* | *Fat, cooking meat, spices* | | | □ | | | | □ | | | | | □ |

*Note (1) the odour potential is made up of the odour concentration and a measure of its annoyance potential*

**Table 2: Moisture and grease/smoke characteristics of various cooking appliances**

| | Particulate (Grease/Smoke) Loading | | | Moisture Content | | |
|---|---|---|---|---|---|---|
| Cooking Appliance | Light | Medium | Heavy | Light | Medium | Heavy |
| Cooking pots | □ | | | | | □ |
| Bain Maries | □ | | | | | □ |
| Steam ovens | □ | | | | | □ |
| Pizza ovens | | □ | | | □ | |
| Bratt pans | | □ | | | | □ |
| Oven ranges | | □ | | | □ | |
| Flat top grills | | □ | | | □ | |
| Chip fryers | | □ | | | □ | |
| Salamanders | | □ | | | □ | |
| Charcoal | | | □ | | □ | |
| Gas fired open grills | | | □ | | □ | |
| Char broilers | | | □ | | □ | |
| Chinese wok ranges | | | □ | | | □ |
| *Smokers* | | | □ | | □ | |
| *Wood Fired Pizza Ovens* | | | □ | □ | | |

## 2.2 Noise

***Technical reference material on background to noise:***

*British Standard 4142:2014*

*British Standard 8233:2014*

*Environment Agency, "H3 (part 2) Horizontal Guidance for Noise Part 2 – Noise Assessment and Control (2004)*

*Institute of Acoustics The science of sound*

*ISO 5136 Determination of sound power radiated into a duct by fans and other air-moving devices in-duct method*

*ISO 5801:2017(en) Fans — Performance testing using standardized airways*

*ISO 10302 "Acoustics -- Measurement of airborne noise emitted and structure-borne vibration induced by small air-moving devices -- Part 2: Structure-borne vibration measurements"*

*ISO 13347 "Industrial fans -- Determination of fan sound power levels under standardized laboratory conditions -- Part 3: Enveloping surface methods"*

*World Health Organisation Guidelines on Community Noise 1999*

*World Health Organisation Night Noise Guidelines for Europe 2009*

*Noise at Work Regulations 2005*

*Specific Local Planning Guidance & Standards (e.g. Supplementary Planning Documents, Planning Advice Notes, Technical Advice Notes)*

### 2.2.1 Noise and nuisance

Noise is one of the main environmental problems in Europe, potentially affecting people's health and behaviour. Noise is generated by several types of source such as transport, indoor and outdoor equipment and industrial activity. In the case of commercial kitchens, the noise generated by them can affect employees and the surrounding neighbourhood. Information on the noise nuisance from commercial kitchens is limited.

*In the original guidance reference was made to the results of a CIEH survey relating to noise attributed to commercial/leisure activities which indicated that:*

- *Noise complaints were received at a rate to about 1,000 per million population;*
- *There were about 32,000 sources subject to complaint, of which about 15% of sources were confirmed to be a nuisance;*
- *Abatement notices were served in about 30% of confirmed nuisance*
- *Prosecutions were taken in about 10% of abatement notices*
- *Where prosecutions were taken these were generally successful*

*The authors of this revised guidance have no reason to believe that this position has changed.*

*More recent data on statutory nuisance complaints in Scotland found that 43,222 complaints were received by Scottish Authorities between August 2016 and July 2017. Of this total 51% of complaints were related to noise).*[2]

*It is anticipated that noise problems associated with commercial kitchens will form only a small proportion of the complaints received and will also form a small proportion of the 'sources of complaint'.*

### 2.2.2 Properties of noise

Noise is any unwanted, unpleasant or harmful sound created by human activities. Different people perceive it in different ways. Human hearing detects frequencies from 20Hz to 20kHz with sound

[2] https://www.rehis.com/story/over-100-statutory-nuisance-complaints-day-scotland-research-reveals [accessed on 10 August 2018)

pressure levels ranging typically from 0 dB (normal threshold of hearing) up to 140 dB (i.e. near a military aircraft taking off).

Sound arises as a result of the vibration-excitation of an elastic medium and resultant propagation of energy through the medium in the form of waves. It results in the excitation of the eardrum, and hence its perception. The sound waves in the medium can assume several shapes including spherical and cylindrical forms.

**Frequency content:** Noise is considered tonal if there is a dominant frequency of relevance in the spectrum (and its harmonics) or broadband, where there is a contribution over many frequencies. *In both cases the noise could be described as a hum, but the former may have characteristics that make it perceptibly more significant.*

**Decibels and levels:** The response of the human being to sound is approximately proportional to the *sound pressure generated by the noise. For each doubling of sound pressure the level increases by 6dB. This is* usually represented in relation to a reference pressure level in the following form:

$$SPL = 20\log_{10}\left(\frac{p}{p_{ref}}\right)$$

| Example 1 sound pressure 100Pa | Example 2 sound pressure 200Pa |
|---|---|
| SPL = 20 x log(100/2.10$^{-5}$) | SPL = 20 x log(200/2.10$^{-5}$) |
| SPL = 20 x log (5000000) | SPL = 20 x log (10000000) |
| SPL = 20 x 6.7 | SPL = 20 7 |
| SPL = 134dB | SPL = 140dB |

Where $p_{ref} = 2\times10^{-5}$ Pa.

*6dB therefore represents a doubling of sound pressure.*

To add decibels (e.g. Levels L1 and L2) the following equation is used:

$$L_{tot} = 10\log_{10}\left(10^{\frac{L1}{10}} + 10^{\frac{L2}{10}}\right)$$

| Example 1 2 sources of 60dB | Example 2 one source 80dB one source 70dB |
|---|---|
| SPL = 10 x log(10$^{60/10}$ + 10$^{60/10}$) | SPL = 10 x log(10$^{80/10}$ + 10$^{70/10}$) |
| SPL = 10 x log (2000000) | SPL = 10 x log (200000000) |
| SPL = 10 x 6.3 | SPL = 10 x 8.04 |
| SPL = 63dB | SPL = 80.4dB |

This shows that adding two sound levels of equal magnitude increases the level by only 3 dB, *whilst sources that are different favour the more dominant source. Hence, attenuating the higher-level* sources first whenever there is more than one source of noise present is advisable.

**Weighting curves:** these curves are used to "shape" the frequency spectrum. There are several weighting curves used with the most common being "A", "Z" and "C". The A-weighted sound level approximates to the response of the human ear and is used to provide an indication of the human being's perception of noise, *whilst the Z-weighting curve represents a standardised linear response. C-Weighting is used by some machine manufacturers supplying acoustic data for their equipment.*

**Noise indicators:** People's perception to noise can vary significantly. In order to establish common assessment methods for noise and a definition for noise limit values, indicators are used. There are several types of indicator and their use will vary according to the aspect of noise of interest. The ones more commonly used are:

$L_{Aeq}$ *is an indicator of the notional steady-state sound at which, at a given position and over a defined period of time, it has the same A-weighted acoustic energy as the actual fluctuating sound.*

$L_{den}$ *is an indicator of the overall noise level during the day, evening and night which is used to describe annoyance caused by exposure to noise.* $L_{day,16hour}$*, and* $L_{night,\ 8hour}$ *can be used to compare directly with WHO related standards. These numbers can be estimated from sound power data for machines and distance correction calculations.*

$L_{night}$ *- is an indicator for the sound level during the night used to describe sleep disturbance.*

$L_{A90}$ *– this is the background noise level without the source noise operating, this is used in BS4142:2014 assessments.*

The process of trying to prevent, reduce or avoid noise has to be done on a prioritised basis by examining the noise characteristics and noise levels involved. For all noise predictions the essential

elements are the characterisation of the acoustic source, knowledge of the transmission path and propagation to the receiver point.

### 2.2.3 Types of noise in commercial kitchens

Factors that influence magnitude of noise in a commercial kitchen are:

- ***Unabated air intake****: air extracted from the kitchen is often replaced with passive or mechanical ventilation air intakes. Unabated air intakes are effectively holes in the building fabric allow noise out unless acoustically treated. Mechanical air intakes (with fan assist) may be a separate source of noise as these tend to be low level it may be possible to screen or cover such intakes to block line of sight with receptor.*
- **Size and format of the exhaust**: the bulk flow leaving the exhaust diffuser generates broadband aero-acoustic noise. The sound level increases with increase in air speed and decreases with increase in area. The presence of grilles will generate tonal components. The sound levels are inversely proportional to the increase in area and increase with the eighth power of the flow speed.
- **Heat release from kitchen:** this influences the size of the exhaust system required and the flow rate of air to be handled by the system. Increase in flow rates can increase the pressure perturbations that can generate noise or can excite other parts of the system leading to noise.
- **Type of cooking appliances used:** this dictates the overall noise level as each individual appliance might contribute significantly to the total noise.
- **Position of exhaust fan in the system:** this may influence the noise radiated by the fan to the interior or exterior of the building and the transmission of sound energy into the exhaust duct system.
- ***Final discharge direction:*** *this can influence the directivity of the sound - wall mounted ducts can transmit sound horizontally from the wall, whilst vertical emission stack discharges could produce point source emissions. Caps, cowls or other points of restriction of air flow can also influence emitted noise levels.*
- **Fitting and dimensions of the exhaust flow ducts:** exhaust duct dimensions, fixings and insulation can all influence the amount of noise these structures will transmit and propagate. Selection of appropriate noise attenuating materials, avoidance of flow restrictions, and vibration isolators between the ducts and the fan are some of the aspects to be considered. *Additionally, line of sight between kitchen and extract point may allow general kitchen noises, (crashing, banging, shouting etc.) to be emitted.*
- **Fan type and speed:** Type of fan used (e.g. centrifugal fan with blades that are backward curved, forward curved or radial, or axial fan) will influence the level and nature of noise emitted. The fan characteristic needs to be chosen so that it is operating at its most efficient duty point as this tends to be the region of minimum noise. If fan speed is too high it will be operating away from that point which can lead to increases in level of up to 10 dB, as well as inefficient air management. It is often also desirable acoustically to use larger fans operating at low speeds rather than smaller fans operating at higher speeds

Sources of noise from commercial kitchen ventilation systems are summarised in Table 3.

**Table 3: Sources of noise from commercial kitchen ventilation systems**

| Source of Noise | How/Why Noise Arises |
|---|---|
| *Air intake* | *- High velocities through intake duct or grill*<br>*- Unabated intake systems allowing noise transmission outwards* |
| Extract hood | - High air velocities through extract hood |
| Extract/supply grille | - High air velocities through extract/supply grille |
| Extract/supply ductwork | - High air velocities through extract/supply ductwork<br>- Resonance of fan noise through extract/supply ductwork |
| Extract/supply fan | - Fan motor noise<br>- Fan impeller balancing *of fans*<br>*- Build-up of grease on (inline) fans* |
| Extract/supply discharge point | - High extract/intake air velocities |

*Ventilation systems shall be designed to prevent an acoustic impact on the external environment and therefore harm to the amenity. It should also be noted that bad design can affect internal noise in flats above or on neighbouring properties if structure-borne noise is not dealt with sufficiently. This is relevant for new and existing kitchen.*

## 2.3 Typical Problems Encountered with Commercial Kitchen Ventilation Systems

*The types of problems encountered by Council Officers when dealing with odour and noise situations are summarised in Table 4.*

**Table 4: Summary of problems of commercial kitchen ventilation systems**

| Area | Effect |
|---|---|
| Where restaurant changes cooking type (e.g. from tea room to fish and chip shop) | Generally found that change introduces more extensive odour emissions over longer opening times.<br>Existing planning permission may not include an odour control requirement. Need to rely on nuisance legislation to ensure mitigation measures are installed. |
| *Air leaving the kitchen is too hot when it passes through the abatement system* | *The extracted air from the kitchen is too hot for grease and oil droplet to have formed by the time it reaches the secondary grease filters and odour abatement. Consequently, droplets only form once the air has passed through the abatement system.*<br>*The extraction system needs to include a means of reducing the air temperature before the secondary grease filters and odour abatement.*<br>*This may be particularly important for kitchens using wood burning appliances.* |
| Application of grease filters and pre filters | Mixed experience of filter maintenance. Maintenance interval of 14 days considered necessary. |
| Application of electrostatic precipitation | Concerns about:<br>• ESP used for odour control (as opposed to particle control); and<br>• Maintenance.<br>Generally used in conjunction with other abatement procedures. |
| Application of carbon filtration | Mixed experience with carbon filters. Concerns about:<br>• Poor maintenance;<br>• Effect on back pressure leading to noise;<br>• Effect on fan size leading to noise; and<br>• Maintenance interval of 4 to 6 months considered appropriate<br>Always used in conjunction with stack for discharge. |
| UV/ozone systems | Concerns about Residual ozone<br>Always used in conjunction with high efficiency particulate removal and a stack. |
| Application of odour neutralising agents | Mixed experiences with this range of products. Concerns about:<br>• Dosing levels leading to further odour problems;<br>• On-going maintenance.<br>Can be used as a ‘polishing’ technique in highly sensitive situations.<br>Must be used in conjunction with stack. |

| Area | Effect |
|---|---|
| Application of stack height | Mixed experience with stack heights. No consistency on appropriate height (roof eaves or ridge). Main concern occurred where:<br>• Premises on rising ground where effective stack height is reduced;<br>• Building housing premises is shorter than surrounding buildings; and<br>• Premises is a listed building, is located in a conservation area or located in a courtyard. |
| *Example noise problems* | • *worn fan bearings*<br>• *slipping belts*<br>• *grease build up on acoustic splitters*<br>• *transmission of sound through the building flats neighbouring the kitchen*<br>• *Failed activation mountings*<br>• *Duct noise (resonance)*<br>• *Air movement noise*<br>• *Fan balance problems*<br>• *Variable speed fans & resonance*<br>• *Intermittent operation (wind up and run down)* |
| *Chimney heights used for wood burning appliances* | *Problems occur when chimney heights are set too low and subsequently cause a potential nuisance.*<br>*It is recommended that chimneys should be designed in accordance with the minimum requirement of the chimney height memorandum.* |

# 3 Regulation of Kitchen Ventilation Systems

## 3.1 Role of Council Officers

There are a number of council officers within the Local Authority (LA) who may be involved in the regulation of commercial kitchen exhaust systems in terms of noise and odour. The nature and extent of their role will depend upon the situation that has initiated the process of regulation and/or the structure of the regulators organisation, but could typically result in engagement by any of the following:

- Planning application submitted (new build or change of use) *may involve Planning Officers (PO) Planning Enforcement Officers (PEO); Environmental Health Officers (EHO); Technical Officers (TO)*
- Noise or odour complaint has been received *will involve EHO or TO, but could also involve PEO*;
- Change of use not requiring a planning application *may involve PEO or EHO or TO*

The following sections provide a summary of the roles of the Local Authority Officers for each of these situations, and where applicable additional explanation is provided immediately below.

### 3.1.1 Regulation in response to submission of a planning application

Table 5 summarises the roles of the LA Officers in the regulation of commercial kitchens in response to submission of a planning application. This could be in relation to a new build kitchen, a change of use or an extension to an existing commercial kitchen premises requiring planning permission.

**Table 5: Summary of the roles of LA Officers when a planning application is submitted relating to a commercial kitchen**

| Activity | Planning Officer (PO) | Building Control Officer (BCO) | Environmental Health Officer (EHO/TO) |
|---|---|---|---|
| 1. Application received. | Circulates planning application - to Environmental Health Department(1). | | Provides advice to PO on conditions relating to noise and odour, or will recommend permission is conditioned or refused. |
| 2. Planning granted with conditions on odour/noise or may be refused based upon odour/noise issues | Example conditions for applications involving kitchen ventilation systems:<br>Noise – Levels that shouldn't be exceeded e.g. 1m from façade of nearest residential property, or at boundary of site.<br>Odour – Submission of an approved scheme for odour control. | | Although in theory conditions are from the planning or licensing department, in practice, EHO has direct contact with applicant to establish odour control scheme, and advises planner on whether appropriate. Any changes to be made will be discussed directly with the applicant.<br>The EHO may recommend refusal of planning permission, if in their opinion, the development will cause statutory nuisance that cannot be mitigated with conditions. |
| 3. Submission of 'full plans' for building regulations | | Plans checked for compliance with Parts B, F and J of Building Regulations. | |

| Activity | Planning Officer (PO) | Building Control Officer (BCO) | Environmental Health Officer (EHO/TO) |
|---|---|---|---|
| approval[3] if planning permission granted. | | | |
| 4. Inspections | | Inspections at defined points during construction and installation to check compliance with submitted plans. | Inspections for food hygiene purposes may require cleaning or maintenance of grease removal or odour abatement plant. |
| 5. Ongoing monitoring | No ongoing monitoring of compliance with planning conditions. In terms of odour & noise any follow-up will be by EHO if a complaint is received. | | Premises will be visited at a frequency set according to risk assessment of premises to check food hygiene requirements. No monitoring in terms of odour/noise. |

*Note (1) EHO's are assumed to be consultees to planning applications in most cases and their comments may have been considered when a Planning Department issues a decision notice. However, there is no requirement for the Planning Department to adopt the EHO advice, as other material considerations may be more pressing or have greater weight in planning terms. In extreme cases this may cause conflict between statutory nuisance provisions requiring abatement of nuisances and planning permission permitting land uses. In such cases legal advice should be sought by the regulator as to how to proceed.*

*Annex B provides examples of information required to support a Planning application for a commercial kitchen ventilation system.*

### 3.1.2 Regulation in response to a noise and/or odour complaint

Table 6**:** summarises the roles of the Planning and Environmental Health Officers in the situation that a noise and/or odour complaint is received by the Local Authority. The Building Control Officer has been omitted from the table because they are not normally involved.

**Table 6: Summary of the roles of LA Officers in response to a noise and/or odour complaint relating to a commercial kitchen**

| **Activity** | **Planning Officer (PO)** | **Environmental Health Officer (EHO)** |
|---|---|---|
| 1. Complaint received by LA. | If received by planning department then received by PEO if specific conditions in place, or referred to EHO for investigation. | EHO responsible for following up complaint received. |
| 2. Investigation of problem. | | Investigate initially by telephone call and then by a site visit. A visit will often be required particularly for odour assessment. |
| 3. Breach of planning conditions? | PEO liaison with EHO following site visit to establish whether in breach of conditions. If yes go to Activity 4. If no go to Activity 5. | Liaison with PO to establish whether in breach of conditions. If yes go to Activity 4. If no go to Activity 5. |
| 4. Discussion & persuasion | | EHO undertakes discussion to agree changes to rectify problem. If cannot be persuaded refer to Activity 6. |
| 5. Follow-up visits. | *PEO carry out follow-up compliance visits. Liaison with EHO may be necessary to ensure any changes are being/have been* | Site visits undertaken to ensure conditions now being met. If found still to be in breach, then refer to Activity 6. |

[3] Building regulations approval only has to be sought where building structure is affected – i.e. always in the case of a new build commercial kitchen, usually for an extension to an existing building, but only sometimes in relation to change in use.

| Activity | Planning Officer (PO) | Environmental Health Officer (EHO) |
|---|---|---|
| | *made to comply. PEO check that conditions are no longer being breached.* | |
| 6. Enforcement measures taken. | Enforcement notice issued by PEO. Review called by EHO following technical advice from EHO. | Technical advice provided to PO for issue of an enforcement notice. |
| 5. Statutory nuisance? | *PEO may supply evidence to support statutory nuisance investigation* | EHO to assess whether causing statutory nuisance. |

*Note: individual local authorities may have different duties and responsibilities assigned to officers.*

### *3.1.3 Assessment of whether causing statutory nuisance*

*Noise*

- *Planning conditions set upon grant of permission assume that the principles of planning are met, i.e. that no significant adverse impacts are present and that adverse impacts are reduced to a minimum. In these cases, it is unlikely that a statutory nuisance will be caused, since conditions/limits would have been set so as to avoid nuisance when addressing amenity or public nuisance. If these controls are in place and working, it is unlikely that statutory action can be taken. An investigation for statutory nuisance is still necessary, but ultimately it is for the local authority to determine compliance by whatever metric. It is strongly recommended that legal advice is taken where there is a potential for conflict.*

*Odour*

- *Planning conditions are only likely to have been set following an applicant putting forward a scheme to manage odour. It is possible that the scheme is appropriate, but that its implementation is poor. In such cases an assessment as to whether statutory nuisance is present (see section below for details of statutory nuisance) will be required.*

### 3.1.4 Regulation in response to a change of use not requiring planning permission

In most cases a change in use of a premises will require planning permission. However, if both the original and the planned future use fall within the same use class (as defined within the Town and Country Planning (Use Classes) Order, *as defined in the GDPO*, planning permission is not required. *This may impact on regulatory regimes available to resolve the issue.*

**Example: A change in use from a tea shop to an Indian restaurant. Both of which would fall under Use Class A3 that includes "use for the sale of food or drink for consumption on the premises or of hot food for consumption off the premises would not require consent, but an Indian restaurant seeking to add class A5 (takeaway) would require consent".**

**Table 7: Summary of the roles of LA Officers in response to a change of use not requiring planning permission relating to a commercial kitchen**

| Activity | Planning Officer (PO) | Building Control Officer (BCO) | Environmental Health Officer (EHO) |
|---|---|---|---|
| 1. Change of use for commercial kitchen premises within Class A3. | Planning permission not required. | Only involved if change in use includes changes to structure of the building. | The Food Premises (Registration) Regulations 1991 (as amended) requires all food premises to be registered with the local authority. On a change in the nature of the food business within Class A3, the owner must inform the LA Environmental Health Department so that details are changed on the register. |
| *2. Change of operation hours* | *May require application to vary condition, in* | | |

| Activity | Planning Officer (PO) | Building Control Officer (BCO) | Environmental Health Officer (EHO) |
|---|---|---|---|
| | *planning unlikely to involve change of infrastructure* | | |
| 3. Investigation into consequences of change in use. | | | As long as the change in use is registered (see below for further details) the EHO may review the likely consequences of the change in terms of protecting the local amenity. |
| 4. Provision of advice. | | | Provision of advice as to any changes that should be made in order to avoid a potential problem in future (i.e. causing statutory nuisance). If advice taken, then should be no problems. If not, then likely that a complaint will be made. |
| 5. Enforcement action. | | | EHO have powers under the Environmental Protection Act in case of likely occurrence of statutory nuisance. This route should only be taken if sure that nuisance will occur. Therefore, more likely to wait for a complaint. |
| 6. Receipt of complaint | Same procedure as detailed in Table 6. In this case it is more likely to require assessment for statutory nuisance in terms of noise as well as odour, since planning conditions set in relation to original use. | | |

Notification of the change in the nature of the food business is required under Regulations made under the Food Safety Act 1990, through the food business proprietor supplying the relevant authority with particulars of the changes. This requirement offers an opportunity to proactively assess the suitability of extraction systems for the new intended use. Implementation of this could vary between local authorities.

## 3.2 Regulation Governing Design and Performance of Ventilation Systems

There is no legislation directly governing the design and performance of commercial kitchen ventilation systems. However, other regulations protecting the health and safety of employees, food safety and local amenity *do exist. Other general requirements* for ensuring building integrity and relating to fire safety indirectly impact upon the design and performance *of extraction systems* and must be complied with. As a result, there are numerous forms of guidance available relating to the design and performance of ventilation systems including industry guidelines such as *DW172 - whilst not a legal requirement, is referenced by IGEM, Gas Safe and the HSE as being the specification for designing a commercial kitchen ventilation system*, British Standards, and guidance from government departments. This section aims to summarise the relevant legislation as well as guidance available.

### 3.2.1 Relevant legislation

❖ ***The Building Regulations 2000 (in response to the Building Act 1984)***

The main purpose of the Building Regulations is to protect the Health and Safety of people in and around buildings. It is necessary to gain approval under the Building Regulations for any new building, or any change to an existing building that involves changes to the building structure. The Regulations are split into 14 parts, of which the following are particularly applicable to commercial kitchens:

- Part B: Means of escape in the event of a fire, internal fire spread, external fire spread including access and facilities for the fire service;
- Part E: Resistance to the passage of sound;
- Part F: Ventilation of buildings; and
- Part J: Air supply to heat producing appliances, discharge of the products of combustion and the protection of buildings from the risk of fire due to heat producing appliances, chimneys and flues.

Part B and Part J relate to fire safety in the kitchen and are discussed further in the section on fire safety. *Part E references passage of sound within the building and may be relevant to restaurants or takeaways with residential accommodation attached.* Part F is more specific to the requirements for the design of ventilation systems in general. In terms of commercial kitchens, Part F refers to the CIBSE (Chartered Institution of Building Services) Guide B. Guide B2, section 3.6 sets out the requirements for ventilation systems in commercial kitchens. Complimentary to this, is Guide B3, which specifically deals with ductwork connected to ventilation systems. As well as providing general design criteria, there are sections dealing specifically with noise and fire issues.

### ❖ *The Environmental Protection Act 1990*

This Act gives powers to the local authority to implement measures to prevent occurrence of statutory nuisance and where it does occur to enforce implementation of measures to rectify them. Statutory nuisance is defined under the EPA 1990 for England and Scotland and includes, in relation to noise and odour:

a) any fumes or gases emitted from premises so as to be prejudicial to health or cause a nuisance;

b) any dust, steam, smell or other effluvia arising on industrial, trade or business premises and being prejudicial to health or a nuisance; and

c) noise emitted from premises so as to be prejudicial to health or a nuisance.

In Northern Ireland Statutory nuisance is defined under the Local Government (NI) Order ‘78/ Public Health (Ireland) Act 1878 as:

a) any factory, workshop, or workplace not kept in a cleanly state, or not ventilated in such a manner as to render harmless as far as practicable any gases, vapours dust, or other impurities generated in the course of the work carried out therein that are a nuisance or prejudicial to health, or so overcrowded while work is carried on as to be dangerous or prejudicial to health of those employed therein;

b) any trade, business, manufacture or process which is a nuisance, or which causes any grit or duct (being solid particles of any kind, other than such particles emitted from a chimney as an ingredient of smoke) or effluvia which is a nuisance to, or injurious to the health of, any of the inhabitants of the neighbourhood.

The Noise and Statutory Nuisance Act 1993 amends Part III of the EPA but does not affect the definition of statutory nuisance relating to noise and odour. One way in which the Local Authority is able to prevent statutory nuisance occurring is via conditions in planning permission. This is discussed below.

### ❖ *The Town and Country Planning Act 1990*

Town and Country Planning legislation requires new build commercial kitchens (as well as most other new developments) to obtain planning permission. In addition, premises will require planning permission for a change in use as defined under the Town and Country Planning (Use Classes) Order and where significant structural changes are to take place.

In relation to noise and odour, the local authority will consider whether sufficient measures for their control are included in the design, and subsequently planning permission may be granted with conditions. For commercial kitchens these are likely to include measures to ensure that noise and odour are managed to avoid detriment to the amenity.

### ❖ *National Planning Policy Framework (NPPF) (ENGLAND) 2018*

*Odour is not specifically mentioned in the guidance. A generic term “pollution” is used, but there is otherwise no specific guidance on odour, or kitchen extraction systems. A summary of the general comments is provided below:*

*Paragraph 8 references sustainable development overarching objectives - should "contribute to protecting and enhancing our natural, built and historic environment, including making effective use of land, … minimising waste and pollution."*

*Paragraph 9 encourages implementation of these objectives through the "preparation and implementation of plans… Planning policies and decisions should play an active role in guiding development to sustainable solutions, but in doing so should take local circumstances into account, to reflect the character, needs and opportunities of each area."*

*Paragraph 170 outlines general requirements for the control of pollution:*

> *170. Planning policies and decisions should contribute to and enhance the natural and local environment by: ….*
>
> *e) "preventing new and existing development from contributing to, being put at unacceptable risk from, or being adversely affected by, unacceptable levels of soil, air, water or noise pollution or land instability. Development should, wherever possible, help to improve local environmental conditions such as air and water quality, taking into account relevant information such as river basin management plans; …*

*Paragraph 180 provides additional detail:*

> *180. Planning policies and decisions should also ensure that new development is appropriate for its location, taking into account the likely effects (including cumulative effects) of pollution on health, living conditions and the natural environment, as well as the potential sensitivity of the site or the wider area to impacts that could arise from the development. In doing so they should:*
>
> *a) mitigate and reduce to a minimum potential adverse impacts resulting from noise from new development – and avoid noise giving rise to significant adverse impacts on health and the quality of life;*
>
> *b) identify and protect tranquil areas which have remained relatively undisturbed by noise and are prized for their recreational and amenity value for this reason; and*
>
> *c) limit the impact of light pollution from artificial light on local amenity, intrinsically dark landscapes and nature conservation."*

*Paragraph 183 advises that "the focus of planning policies should be on whether the proposed development is an acceptable land use, rather than control of processes or emissions (where these are subject to separate pollution control regimes)."*

*Supplementary planning guidance play a key role in steering planning policy. Such guidance is provided by the devolved governments.*

### ❖ *Health and Safety legislation/guidance*

In relation to general ventilation in the workplace, the *Workplace (Health, Safety and Welfare) Regulations* (1992) require that 'an effective and suitable provision shall be made to ensure that every enclosed workplace is ventilated by a sufficient quantity of fresh or purified air'. Directly related to commercial kitchens, the Health and Safety Executive (HSE) have produced a reference sheet with the title "Ventilation in catering kitchens" (2017). This provides guidance on how to assess the adequacy of any existing ventilation equipment, and the ventilation requirements for new build kitchens.

*The HSE has also published guidance (Catering Information Sheet No 26) dealing with the likely exposure to carbon monoxide from use of solid fuel appliances in commercial kitchens.*

*The Control of Noise at Work Regulations (2005) specify Action Levels that relate to the "daily personal noise exposure" ($L_{EP,d}$) of workers. At the first Action Level ($L_{EP,d}$ = 80 dB(A)) ear protection must be provided and at the second Action Level ($L_{EP,d}$ = 85 dB(A)) ear protection must be worn.*

*The Supply of Machinery (Safety) Regulations 2008 requires that any plant or equipment likely to expose an operator at a work station to more than 70dB of noise should provide full details of the acoustic sound pressure and sound power of the equipment of the equipment need to be provided. This can be used as screening criteria for the potential impact of extraction systems.*

### ❖ *Food Hygiene Legislation*

*The Food Safety and Hygiene (England) Regulations (2013) and EU Regulation 852/2004,* require that:

- There is to be suitable and sufficient means of natural or mechanical ventilation.
- Mechanical airflow from a contaminated area to a clean area is to be avoided.
- Ventilation systems are to be so constructed as to enable filters and other parts requiring cleaning or replacement to be readily accessible.

❖ ***Fire prevention legislation***

Proprietors of commercial kitchens are under a duty to ensure that the fire precautions meet the requirements of the "Fire Precaution (Workplace) Regulations 1997".

### 3.2.2 Industry guidance/standards

The *Building Engineering Services Association (BESA),* who aim to provide standards for the design of commercial kitchen ventilation systems, have produced relevant industry guidance. Their publications, along with other available relevant industry guidance, are listed below:

- BESA Standard for Kitchen Ventilation Systems, DW/171;
- *BESA Specification for Kitchen Ventilation Systems, DW/172;*
- *BESA Guide to Good Practice - Cleanliness of Ventilation Systems, TR/19*

It is worth noting that BESA Standard DW/171 includes a useful section on odour control *which complements this amended report*.

Also, in relation to food hygiene, there is a series of industry guides to compliance with "The Food Safety and Hygiene (England) Regulations 2013" and "EU Regulation 852/2004".

### 3.2.3 Regulations/guidance relating to fire safety

The Building Regulations Part B relates to general fire safety, and Part J relates to protection of buildings from fire risk due to heating appliances. These must, therefore be complied with by commercial kitchens in order to obtain building regulations approval. Further to this legislation, the establishment will also be required to comply with the "Fire Precautions (Workplace) Regulations 1997", which relate to general fire safety.

Guidance in terms of general fire safety is provided by the Building Services Research and Information Association in their publication with the title "Commissioning of Fire Systems in Buildings (1994)".

More specific guidance relating to fire suppression in ventilation systems and duct work is provided in the BESA Standard DW/171. *In addition to this the Association of British Insurers have produced a document on "Fire Risk Assessment for Catering Extract Ventilation". This provides practical guidance on the factors influencing the likelihood of a fire in a kitchen ventilation system and how to undertake an appropriate risk assessment.*

## *3.3 Additional case study material*

*The following case studies have been extracted for Defra "Odour Guidance for Local Authorities (March 2010)" [Withdrawn September 2017].*

***Case Study 1: Good Practice Example – Use of Planning Condition to control odours from an extract system*** *Practice Example – Use of Planning Condition to control odours from an extract system*

*"No air extraction system shall be used on the premises until a scheme which specifies the provision to be made for the control of odour emanating from the site has been submitted to and approved by the local planning authority. The scheme may include such combination of measures as may be approved by the LPA. The said scheme shall include such secure provision as will ensure that the said scheme endures for use and that any and all constituent parts are repaired, maintained and replaced so often as occasion may require."*

***Case Study 2: Good Practice Example – Ventilation/Extraction Statement***

*"Details of the position and design of ventilation and extraction equipment, including odour abatement techniques [and acoustic noise characteristics], will be required to accompany all applications for the use of premises for purposes within Use Classes A3 (i.e. restaurants and cafes used for the sale of food and drink on the premises), A4 (i.e. drinking establishments such as public houses, wine bars etc), A5 (i.e. hot food takeaways used for the sale of hot food for consumption off the premises), B1 (general business) and B2 (general industrial)."*

***Case Study 3: Good Practice Example - Odours from Hot Food Takeaway***

*One local authority served an abatement notice on this business requiring the abatement of the statutory nuisance arising from odours emanating from the ventilation extraction system by requiring the execution of works in compliance with the following schedule: "Within 1 calendar month of the date of service of this abatement notice, employ the services of a suitably qualified ventilation engineer to produce a scheme designed to abate the statutory nuisance from odours. Within 2 weeks thereafter and prior to any measures being implemented, submit the scheme to the Pollution Control Division of the Environment Department for written approval. Within 1 calendar month of receiving such approval ensure that the approved scheme is properly installed and commissioned."*

# 4 Review of Common Types of Kitchen Ventilation Systems

***Reference material on design considerations for kitchen ventilation system:***

***DW/100 Ductwork Publication Pack***
***DW/143 A Practical Guide to Ductwork Leakage Testing***
***DW/144 Specification for Sheet Metal Ductwork - Low, Medium & High Pressure/Velocity Air Systems***
***DW/145 Guide to installation of Fire and Smoke Dampers***
***DW/154 Specification for Plastics Ductwork***
***DW/191 Guide to Good Practice - Glass Fibre Ductwork***
***TR/19 Guide to Good Practice - Cleanliness of Ventilation Systems***
***CEDa Guidance on best practice for the safe installation, operation and maintenance of solid fuel fired catering equipment in commercial premises.***

## 4.1 Overview

The principle function of a kitchen canopy is to protect the working environment around the cooking process from soiled matter and flame, and to ensure that the working environment is tolerable and safe for people to work in. An air flow should be created across the cooking process(es) to capture the effluent created (heat, steam, fat, smoke and odour). Any vapours produced should be collected and contained by means of filters within the canopy and duct work, thus allowing clean air to be discharged. Ventilation is required in the kitchen area and adjoining areas because:

- considerable convective and radiant heat is given off by cooking equipment;
- air becomes laden with odours, grease, fumes and products of combustion;
- during meal preparation and washing up, humidity levels increase over a wide area;
- air replacement and consistency of temperature are required throughout the cooking and adjoining areas;
- air is required to dilute and replace products of combustion from gas fired appliances; and
- Supply air is required to ensure complete combustion of the fuel *and provide safe operation of the gas equipment. Details of these requirements are contained in the Building Regulations, BS 6173 and the CIBSE Guide B2*

The main emissions that require removal are:

- Expanded air from the heat load surrounding the cooking device;
- Precipitation of moisture existing in food into a vaporous state, primarily consisting of steam, grease, cooking odours and organic particulate;
- Smoke;
- Exhaust fumes from combustion appliances such as gas, wood or charcoal.

*For satisfactory operation of odour control it is necessary to ensure:*

- *The temperature of the extracted air must be low enough to ensure moisture/grease/fat droplets are able to form;*
- *Once particulate matter (moisture/grease/fat/smoke) has formed it should be abated as far as possible;*
- *Once the particulate matter loading is reduced, the odour control step can be applied.*

Kitchen ventilation systems can take many different forms. The design of a system is dictated by the type of cooking carried out, the scale of cooking carried out and the location of the kitchen premises. As

part of this general review the main elements that may be found in a ventilation system are shown in Figure 1 which presents a schematic diagram of a kitchen ventilation system. In this chapter the different options for each of these elements are described.

***Figure 1: Example of a well designed kitchen appliance ventilation system for a single canopy installation***

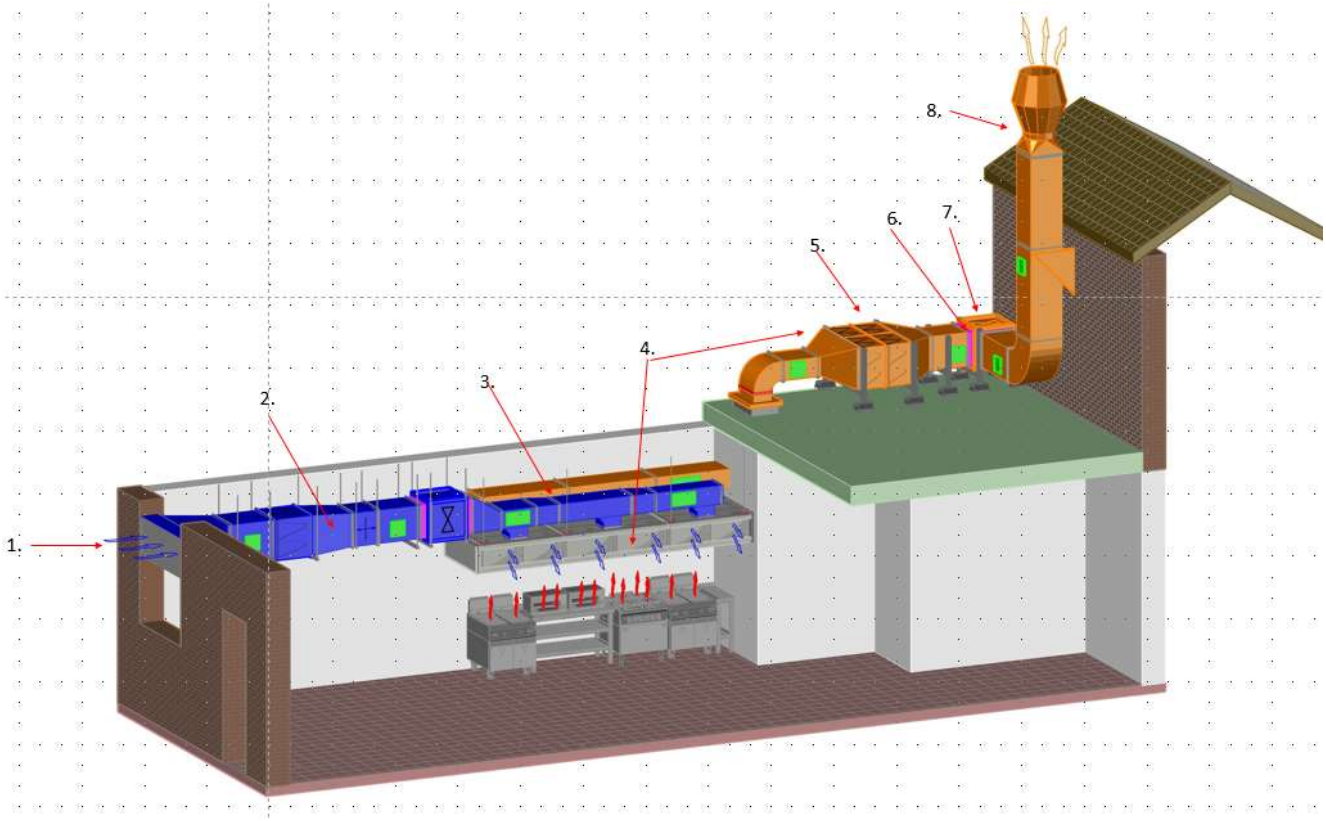


*Key:*

1. *Supply air intake*
2. *Supply side filter, heaters, fans etc*
3. *Ductwork - properly sized extract & supply ductwork to minimise air noise & resistance to airflow with balanced spigot connections to distribute air along length of canopy*
4. *Grease and particle separation/filtration*
5. *Odour control component (e.g. Carbon filtration module) - where required - to be sited under negative pressure (pre fan)*
6. *Flexible connections to isolate fan noise & transmission through duct*
7. *Extract fan - low noise centrifugal - positioned so as to keep all internal ductwork under negative pressure (pre fan). Also consider fan position for future maintenance access. Further, the preceding ducting may include silencer to attenuate noise positioned appropriately to reduce noise level at the extract point, and, antivibration mounts may also be appropriate.*
8. *High velocity discharge cowl positioned as high as 1m above roof ridge complete with suitable drain point*

## 4.2 Extraction Canopy

The objective of the extraction canopy or canopies within a commercial kitchen is to maintain the internal ambient environment:

- at a safe and comfortable temperature;
- within a comfortable moisture level; and
- at a safe noise level.

The following sub sections present background information that should be used when designing extraction systems and is presented here so that the adequacy of a ventilation accompanying a planning application or kitchen upgrade can be assessed. It is recommended that the actual design of a ventilation system be carried out by an expert.

*It is a mandatory requirement that all extraction systems (new and existing) should comply with the "Control of Noise at Work Regulations 2005". As the internal occupations noise level will be dictated by activities within the kitchen, as well as extraction system noise, ideally the extraction system should not contribute more than 70dB of noise at the operator location, (10dB below the lower exposure level). The "Supply of Machinery (Safety) Regulations 2008" require that all new plant has noise information specified where the sound level exceed 70dB at the workstation.*

### 4.2.1 What ventilation systems are used

The two main types of ventilation system used in kitchen areas are kitchen canopies and ventilated ceilings to achieve ideal air flow patterns across the appliance (see Figure 2). Modern systems are often able to extract/filter exhaust air, and to supply make-up air in a variety of ways.

For the purpose of dealing with an odour problem the main area of concern will be those extracts located over cooking areas as this will contain the most concentrated cooking odour. The level of odour that may be found within a general room extract system will contain more dilute odour and therefore will be harder to treat.

Noise problems can arise equally from any part of a mechanical ventilation system.

**Figure 2: Air flow patterns**

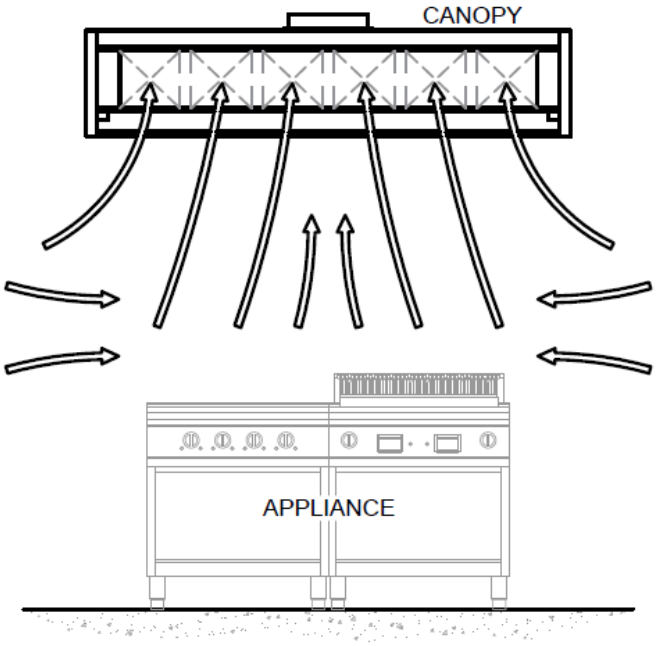

### 4.2.2 Determining ventilation rates

Calculation of the optimum ventilation rate for a given location is based primarily on the types of appliances in use, and on the level of activity of the location.

Several methods can be used to calculate the optimum vent rate:

*METHOD RECOMMENDED BY DW/172*

*1. Thermal Convection Method: Each appliance is assigned a thermal convection coefficient, which is multiplied by a factor dictated by its mode of heating (gas or electricity) to generate a convection value. Values for individual appliances are summed to determine the required ventilation capacity. More detailed description and input data are given in BESA DW/172 and CIBSE guide B2.*

Several other methods could be used to calculate the vent rates:

2. Face Velocity Method: Capture velocity for the level and type of loading is multiplied by canopy face area to determine the required ventilation rate. Velocities for light, medium, and heavy loading are 0.25, 0.35, and 0.5 m/s, respectively.
3. Appliance Power Input: Each appliance is assigned a ventilation rate, which is multiplied by the power input in KW to determine the required air flow rate. Individual flow rates in $m^3/s$ are added to calculate the total flow rate for a system. More detailed description and input data are given in CIBSE guide B.
4. Air Changes Method: A per hour vent rate equivalent to 40 times the ventilation volume is considered minimum for comfort under normal conditions, but rates as high as 60-120 volumes per hour may be required where high-output equipment is densely located. Using this method air may be extracted via both a hood extract and a ceiling extract.
5. Linear Extract Method: Each linear meter of active filter length is assigned a vent rate depending on the vent canopy type.
6. Meals Method: Extract rate in litres/sec is expressed as 10-15 times the number of meals served per hour.
7. Area Method: Area of the cooking space in $m^2$ is multiplied by 15-20 litres/sec to give an approximate volume flow rate.

*A commercial kitchen where no cooking takes place is classified as a Preparation Area and should be ventilated at a rate of at least 20 air-changes per hour.*

### 4.2.3 Make-up air

In order for a kitchen extract system to function correctly the overall design must include provision for make-up or replacement air. Air can be made up either by natural infiltration or by using a mechanical supply. If a mechanical input system is used, typically 85% of air will be provided mechanically and the remaining 15% by natural means.

*The Food Safety and Hygiene (England) Regulations 2013 and EU Regulation 852/2004* require that "mechanical air flow from a contaminated area to a clean area must be avoided". Mechanical systems offer a greater degree of control and avoid:

- Unfiltered air entering the kitchen;
- Air being drawn from dirty areas; and
- Draughts and discomfort during cold weather

Natural systems cannot provide targeted 'cooling' to staff working adjacent to canopies. Make-up air can be introduced into a kitchen by means of:

- the canopy;
- ventilated ceiling;
- HVAC system; or
- combination of the above.

A range of extraction/make up air hoods are available. The choice of hood will be dictated by the application. Whichever system is chosen due regard should be given to potential noise issues arising from the make-up air system (fans, duct work grilles etc).

Where a kitchen relies on a natural make-up air system, its resistance must be taken into account when calculating the overall system resistance against which the extraction fan will operate. In such a system, restaurant operators *should ensure sufficient volume of inlet air to cater for good extraction and should not* rely on open doors and windows within the kitchen area to supply natural make-up air. During summer months this may give rise to odour and noise problems for receptors living adjacent to the kitchen area or, allow the ingress of pests into the food areas.

### 4.2.4 Hoods/extract points

A range of extraction hoods are available (see Figure 3) and the choice of hood will be dictated by the application.

**Figure 3:Canopy design**

| a) Overhead wall mounted | b) Overhead single island |
|---|---|
| 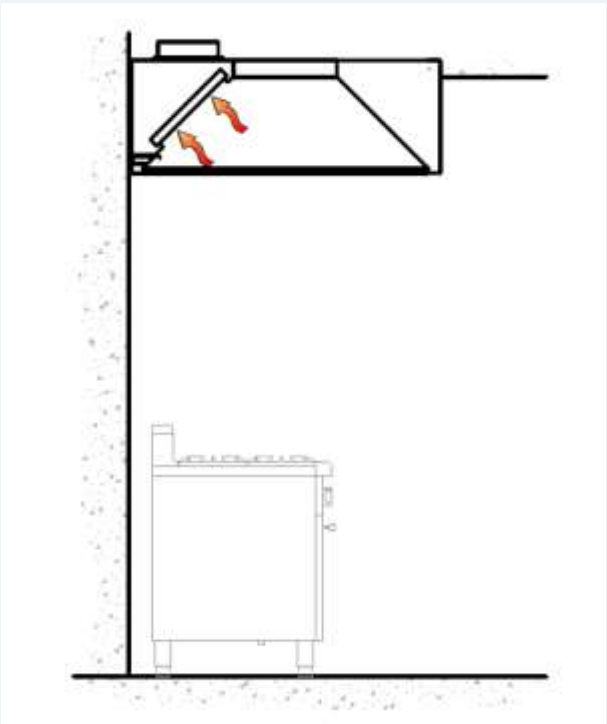 | 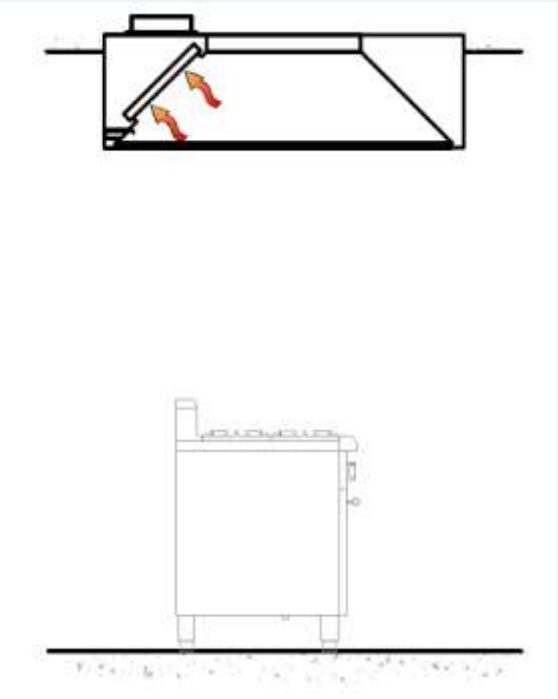 |

## c) Overhead double island

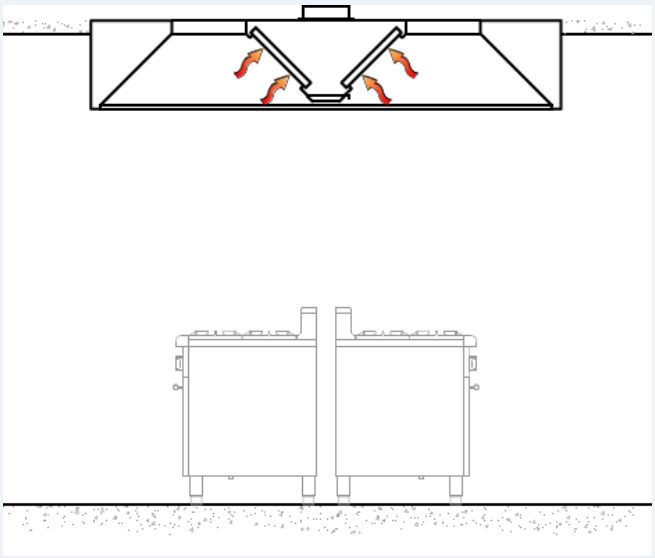

## d) Low level wall mounted

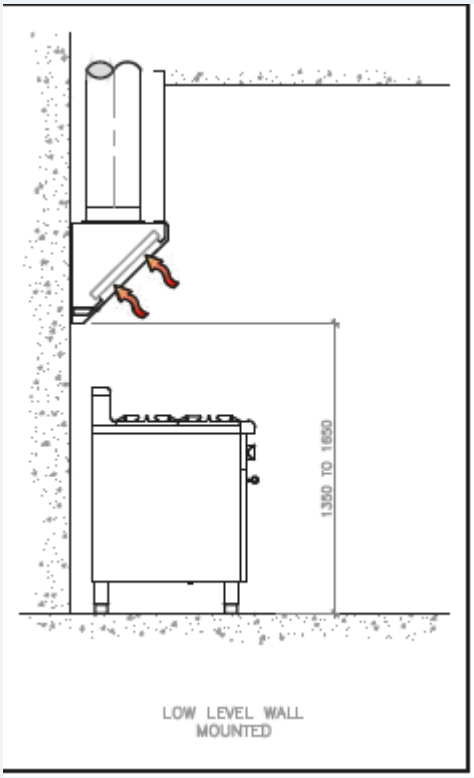


## e) Eyebrow

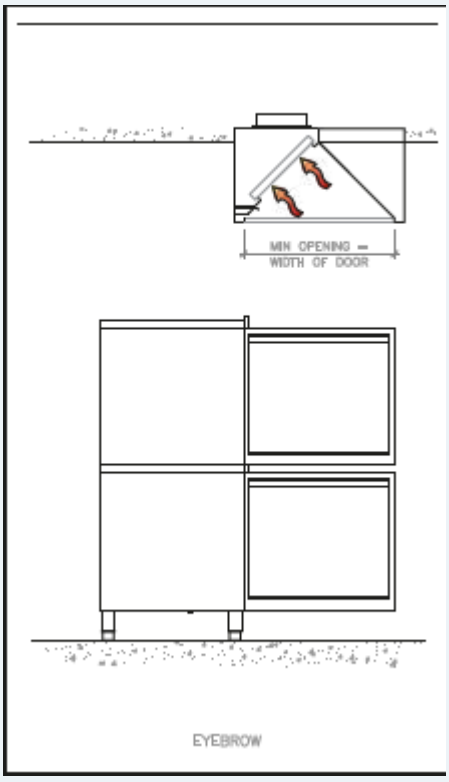


## f) Grille

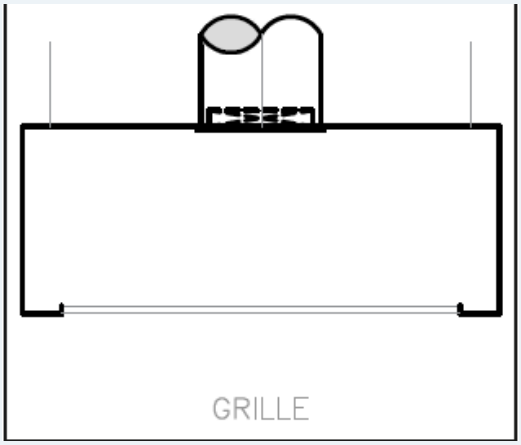

g) Dishwash canopy with condense drain

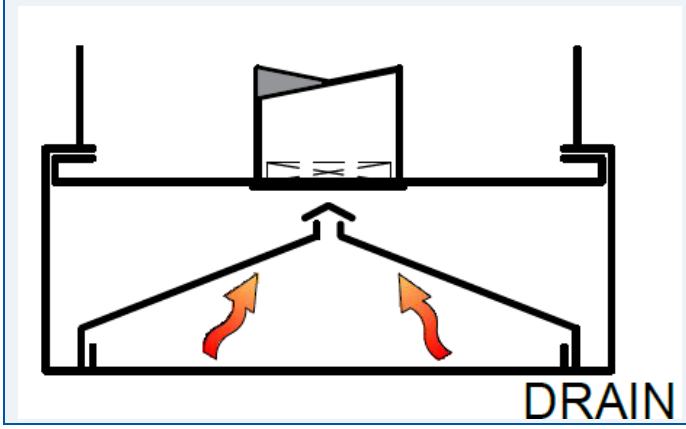


The dimensions of a canopy are dictated by the size of the catering equipment that it is serving. The two criteria that have the most influence on the amount of air required for effective ventilation are the **plan dimensions** and **height**.

When canopy dimensions are specified, then:

- Unless restricted by walls etc., the plan dimensions of the canopy shall always exceed the plan dimensions of the catering equipment by a minimum of 250mm on each free side.
- Dimensions at the side may need to be increased where high output equipment is located at the end of the cooking line-up. For example, the overhang should be increased to 600mm in front of combination steaming ovens to cope with the steam or fumes released when the doors of the appliance are opened.
- Solid fuel appliances must have an overhang of 300mm from the door open position.
- The overhang dimensions are to the inside of the condensation or stiffening channel, or the supply plenum, the appropriate dimension shall be added when specifying the overall canopy size.

The **height of the canopy** is governed by the height of the ceiling and the underside of the canopy should be located between 2000 and 2100 mm above the finished floor level. The efficiency of canopies less than 400mm high are less efficient than normal because the collection volume is reduced. In these situations, the face velocity may need to be increased to compensate. Where the ideal flow rate cannot be achieved the size of the canopy may be increased to aid capture.

The ideal distance between the lowest edge of the grease filter and the top of the cooking surface should be 450mm as a minimum. This is to avoid the risk of excessive temperatures or fire in the filter that could cause the extracted grease to vaporise and pass through to the ductwork.-This dimension will vary with the type of cooking appliance as illustrated in Figure 4 and can be reduced where fire suppression equipment is installed.

**Figure 4: canopy dimensions**

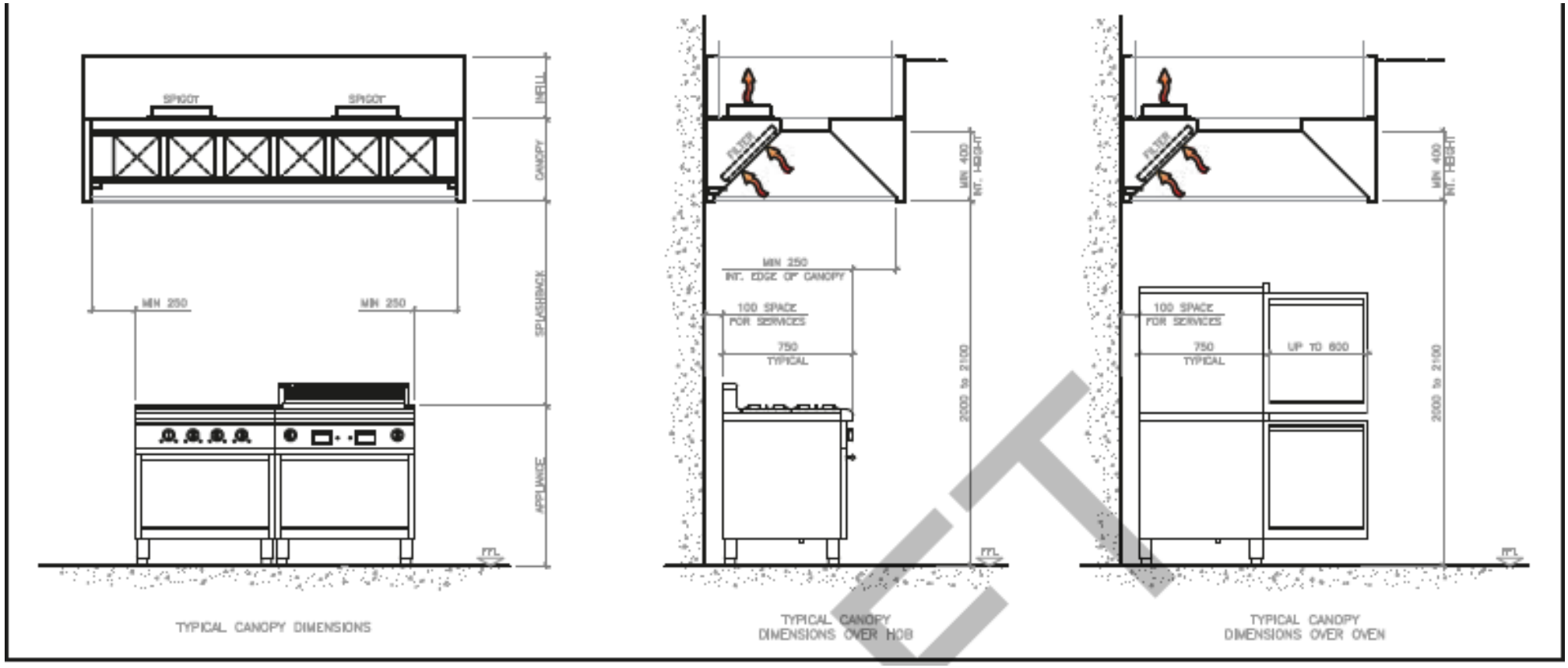

### 4.2.5 Ventilated Ceilings

In certain circumstances it may not be practical to install extract canopies, for example:

- where due to structural limitations, low ceiling levels make the use of canopies impractical;
- where the cooking equipment does not generate intensive output in concentrated areas; or
- where a good level of extraction is required but the level of odour/grease produced is relatively low such as in large food preparation or distribution areas.

In these situations, ventilated ceilings may be employed. These systems tend to have higher capital and installation costs and therefore the use will be limited to larger kitchens.

Two types of system are available:

- **Cassette system:** Is an integrated system incorporating partitioned or dedicated extract and partitioned or dedicated supply. The systems are modular and contain a number of cassettes of proprietary design, which filter and separate grease from the air prior to its exhaust. The grease is normally collected in a non-drip integral or perimeter trough for removal and cleaning.
- **Modular plenum system:** The plenum system comprises a series of filter plenum units which allow the exhaust air to pass through a single or double bank grease filter for grease separation before passing into the ceiling void for central point connection and discharge to atmosphere.

**Figure 5: Modular cassette ceiling**

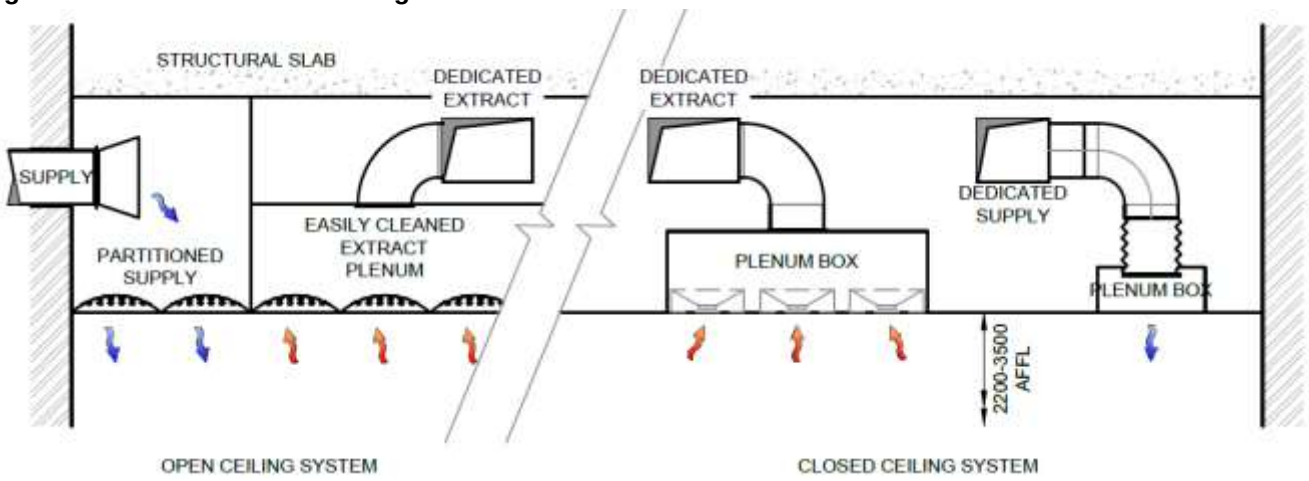

***Figure 6 : plenum ceiling***

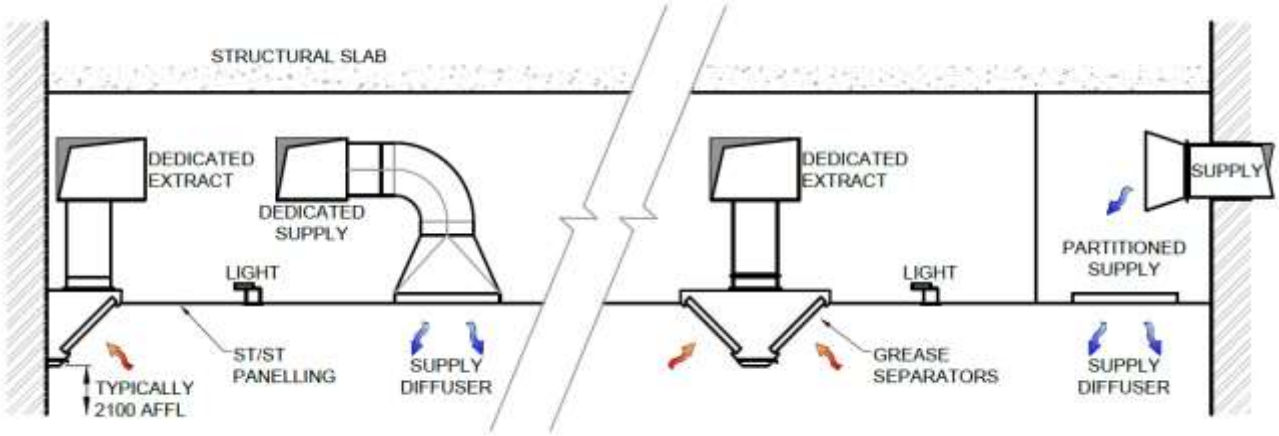


### 4.2.6 *Specific requirements for solid fuel catering equipment*

*This type of cooking equipment relies on burning solid fuel (e.g. wood, charcoal). The use of such equipment is restricted in Smoke Control Areas where either the fuel itself or the appliance shall be DEFRA approved.*

*There are fundamentally two types of equipment to be considered.*

- *Self-contained ovens and grills which have a built in flue and which are intended to be connected directly to a flue independent of other extraction systems. These are often decoratively designed or designed to go behind a decorative fascia in a front of house location.*
- *Equipment which is located in the kitchen often as part of the main extraction system used by equipment using other fuels.*

*Moisture content of the wood used as fuel may contribute to the odour emission from the establishment.*

*When solid fuel is burned, products of combustion, including carbon monoxide gas, are released. Carbon monoxide is a highly poisonous gas with no taste, smell or colour. Moderate exposure can lead to serious permanent ill-health effects or death. The advice published in the HSE Catering Information Sheet No 26 "Preventing exposure to carbon monoxide from use of solid fuel appliances in commercial kitchens" should be followed when designing the ventilation system.*

### 4.2.7 Materials of construction of canopies

The *Food Safety and Hygiene (England) Regulations 2013 and European directive* requires that in food preparation areas:

> "ceilings and overhead fixtures must be designed, constructed and finished to prevent the accumulation of dirt and reduce condensation, the growth of undesirable moulds and the shedding of particles."

In relation to canopies, it is best practice to use stainless steel especially if the relevant surface comes directly into contact with food. Typically canopies and other overhead fixtures are fabricated using ultra fine-grained stainless steel, supplied to *EN 10088* and Grade 304. Higher Grades of stainless steel may also be specified. Other materials that could be employed are as follows:

- **Galvanised steel** is not recommended.
- **Untreated aluminium** should not be used. Poisonous particles can be generated when aluminium oxidises in moist atmospheres.
- **Electrolytic zinc coated steel** can be used provided it is treated with a protective finish (e.g. heat beaked epoxy polyester powder coating)
- **Wired glass and translucent panels** should not be used as bacterial growth can occur at joints between sheets

Other best practice guidelines include:

- Where air must be equalised within a supply plenum of a canopy 0.8mm perforated stainless steel sheet should be used. In addition, care should be taken to ensure that the face velocity is about 0.7 m/s. Noise generation increases when velocities of 0.9m/s are exceeded.
- Discharge grills on make-up air systems should be fabricated with 1mm perforated stainless steel sheet.
- Condensation should be avoided in canopies that are provided with supply plenum. Where insulation is used it should:
  - be a rigid foil faced non fibrous slab, with a class 1 spread of flame; and
  - not be fibre based as this could contaminate food.

## 4.3 Duct Work

Duct work on a kitchen ventilation system may include:

- straight ducts of various length, rectangular or circular in cross-section;
- silencers;
- bends (elbows), right angled or curved;
- branches, which may have one or more outlets;
- distribution boxes (plenums);
- terminal units, grilles, diffusers, registers; and
- transition pieces which connect the fan or silencer to the duct.

Ductwork delivering make-up air to the canopy have no special requirements, other than the application of thermal insulation and protective mesh (pre-filtration and bird mesh screen). Designs should ensure that mechanical air flow from a contaminated area into a clean area must be avoided. Under normal circumstances and providing it runs within the fire compartment of the kitchen itself, extraction duct work has no special requirements. Such ductwork should be low pressure Class A type.

Other design considerations are:

- For kitchens, cooking materials with high grease content total ‘grease tightness’ may be required. This duct work may be constructed from 1.2 mm stainless steel or 1.6 mm electrolytic zinc coated steel. The duct work should be fully welded. Where gaskets are required they should be non-porous, impervious to grease and cooking oils and withstand temperatures experienced within the extract hood.
- For duct work serving water wash or water mist filtration systems should slope back to the canopy with a gradient of 1 in 50.
- Wherever possible duct work should not pass through any fire barriers.
- Duct work should take the most direct route to the exterior of the building with the minimum number of changes in direction and possible grease traps.
- No other systems should be connected into the kitchen extract system.
- Where the captured air cannot be discharged immediately fire rated ductwork may be required.
- Where supply air discharges directly into or downwards across the face of the canopy fire dampers should be installed in the supply spigot and where the duct penetrates the kitchen fire compartment. This prevents air fuelling the flames and/or acting as an exhaust route for fire.

- Duct velocities should be as follows:

| | Supply (m/s) | Extract (m/s) |
|---|---|---|
| Main runs | 6 – 8 | 6 – 9 |
| Branch runs | 4 – 6 | 5 – 7 |
| Spigots | 3 – 5 | 5 – 7 |

- All internal surfaces of the ductwork should be accessible for cleaning and inspection. Access panels should be installed *at 2.0* m *centres as recommended by DW172* and should be grease tight using heat proof gasket or sealant.

To minimise noise emissions from ducts:

- *Duct with stiff walls will vibrate less than a flexible one and will therefore have lower noise attenuation and break-out noise.*
- *Circular ducts have lower attenuation than rectangular ducts, as circular ducts have greater wall stillness*.
- Lined ducts, including bends, elbows or spigots, may be required if noise reduction is necessary.

## 4.4 Dampers

Volume control dampers are often necessary but should be kept to a minimum and incorporate the following features:

- For extract systems, the damper blades should ideally be fabricated from stainless steel.
- The operating mechanism should be outside the air stream and be capable of withstanding the higher air temperatures associated with kitchen extract systems.

In accordance with BS 9999, fire dampers must not be used in the extract system from a kitchen as the fire authorities may use the extract fan to clear smoke from the kitchen.

Where fire dampers may be required on the supply side, the following points should be considered:

- The damper should be of a robust construction suitable for its application and complete with an installation frame where appropriate.
- Due to the additional difficulty of working over hot cooking equipment, particular care should be taken when positioning access panels.
- A visual or audible alarm should be considered if the unit is in a remote location.

## 4.5 Fans

Kitchen ventilation systems often have relatively high resistance against which a fan has to operate. Therefore, fans need to be sized to cope with a design pressure of a minimum plus a minimum additional 10% pressure margin. Care must to be taken:

- to ensure operational changes e.g. build-up of dirt on mesh filters are taken into account; and
- if changes are made to the ventilation system that may alter the operating pressure.

To overcome such changes variable speed control or balancing dampers may be used. A range of impeller designs is available as follows:

- Backward curved centrifugal, mixed flow or axial flow impellers are preferred as they are less prone to imbalance and are easier to clean and maintain due to their open construction.
- Fixed or adjustable metal impellers are recommended.

- Lightweight multi-vane or plastic–type impellers can warp and are prone to collecting grease. Although plastic bladed fans can be used in non-grease, low temperature situation.

The fan must be able to operate at between 40°C and 60°C at 95% relative humidity. Motors should be rated to IP55[4]. Where fan motors sit within warm moist air streams, they should be upgraded to withstand more onerous conditions. To avoid excessive temperature build-up, temperature detectors should be fitted.

*An audible and/or visual indicator should be included to warn of fan failure.*

Drain holes, *fitted with breather plugs and easily accessible so they can be kept clear,* should be provided at the lowest point in the fan housing to remove condensation. Care needs to be taken to ensure that the drain hole does not downgrade the Index of Protection (IP) of the motor.

Dual or variable speed regulation are widely used. The fan must always operate at its design duty, especially when grease is being produced. A minimum extract level should be set within the speed regulator to ensure that, even at low speed, an adequate rate of ventilation is maintained. Speed regulation should be applied to both make-up air and extraction air. Speed regulation cannot be employed with water wash/cartridge systems as flow rates are fixed.

*In accordance with BS 6173 ("Specification for installation and maintenance of gas-fired catering appliances for use in all types of catering establishments")*, make-up and extract fan operation should be interlocked with gas supply, so that gas supply is switched off if the fans fail. Fans should be isolated when a fire suppression system is activated.

The connection between ductwork and fan housing should be suitable for use in grease-laden atmospheres and at duct temperature. Joints must be clamped or bonded to prevent air leakage. Under fire conditions the material should have a minimum integrity of at least 15 minutes. The advantages and disadvantages of different fan types are summarised in Table 8.

*For fans serving canopies above solid fuel burning appliances, the motor must be out of the airstream and impellers must have metal blades.*

*The high temperatures commonly seen in a solid fuel system can reach 260/300°C. This can lead to failure of the fan motor bearings and other components which cannot withstand the heat.*

**Table 8: Advantages and disadvantages of different fan types**

| Fan Type | Advantages | Disadvantages |
|---|---|---|
| Centrifugal Fan Sets (Direct driven) | • Large range of pressure and volume characteristics<br>• No temperature limitations<br>• Robust and easily maintained<br>• Adaptable to change in system requirements with pulley/motor changes<br>• Standby motors can be more readily fitted | • Expensive<br>• Requires more space than is usually available in the kitchen<br>• Drive belt models require regular belt maintenance<br>• Forward curved impeller fans should only be used for supply systems |
| Bifurcated Fans | • Robust with no temperature limitations<br>• With motor out of air stream this fan is still considered one of the safest options with high temperatures<br>• Easily installed into a ductwork system<br>• Robust and easily maintained | • Less expensive then centrifugal fan but not cheap<br>• Heavy in construction and not always easy to support<br>• Too noisy for siting within a working environment |

*[4] IP (or "Ingress Protection") ratings are defined in international standard EN 60529 (British BS EN 60529:1992, European IEC 60509:1989). They are used to define levels of sealing effectiveness of electrical enclosures against intrusion from foreign bodies (tools, dirt etc.) and moisture.*

| Fan Type | Advantages | Disadvantages |
|---|---|---|
| | | • In-duct noise requires abatement<br>• Restricted range of resistance capability<br>• Standard unit not readily available with speed regulation |
| Belt Driven Axial Fans | • Compact<br>• Extensive duty range when operated in series, adequate for kitchen use<br>• Few temperature limitations<br>• Easy installation into ductwork<br>• Less expensive | • Drive belts and other components require regular maintenance<br>• Less robust than previous fans |
| Axial Fans (Metal Impellers) | • Compact<br>• Extensive duty range when operated in series, adequate for kitchen use<br>• Easy removal for cleaning and maintenance<br>• Cheaper option than previous items unless multiple units are required. | • Temperature limitations<br>• Less robust than belt-driven or centrifugal fans |
| 'In-Line' Centrifugal and Mixed | • Compact<br>• Good duty range, adequate for kitchen use<br>• Less expensive than previous items<br>• Easy removal for cleaning and maintenance | • Temperature limitations, but still suitable for kitchen use<br>• Less robust than previous models<br>• Forward curved fans should only be used for supply systems |
| Roof Extract Fans (Vertical Jet Discharge with Centrifugal Impellers) | • Compact<br>• Good temperature range when motor is outside of air stream<br>• Easy removal for cleaning and maintenance<br>• No space restrictions<br>• Good external appearance<br>• No discharge ductwork required | • Temperature limitations, but suitable for kitchen use.<br>• Requires good roof access for maintenance<br>• More expensive than in-line/axial models |

*Note BESA DW172 recommends the use of Centrifugal, Bifurcated and Axial Fans.*

The noise characteristics of the various fan types are presented in Table 9.

**Table 9: Noise characteristics of different fan types**

| Fan Type | Noise | Description |
|---|---|---|
| Centrifugal | Lower frequencies | Air enters axially and is discharged radially. |
| Axial | Mid–range frequencies | Air enters and leaves the fan in a straight–through configuration. |
| Mixed flow | Lower frequencies | The air path is intermediate between axial and centrifugal. |
| Cross flow | Varied | Long cylindrical impeller with a large number of shallow blades discharging via a long slot. |
| Propeller | Tonal peaks | Similar to an axial fan, but mounted in a ring permitting both radial and axial discharge, higher volume and lower pressure. |

## 4.6 Access Panels for Cleaning

Access panels should be suitable for the purpose for which they are intended. They should incorporate quick release catches, sealing gasket and thermal, acoustic and fire-rated insulation properties equal to that of the duct to which the panel is fitted. The panel and aperture should be free of any sharp edges. Guidance on the required locations for access panels is provided in Table 10.

**Table 10: Location of access panels for cleaning**

| Control Dampers | Both sides |
|---|---|
| Fire Dampers | One side |
| Heating/cooling Coils | Both sides |
| Attenuators (Rectangular) | Both sides |
| Attenuators (Circular) | One side |
| Filter sections | Both sides |
| Air turning vanes | Both sides |
| Changes of Direction | One side |
| In Duct Fan/Devices | Both sides |

## 4.7 Odour Abatement Tools

Odour emissions from kitchens arise from odorous chemicals that are either too small to be trapped by coarse filtration or are present in the gas phase. The degree and type of odour control required is dictated by:

- size of the cooking facility;
- type of food prepared;
- *cooking method used*; and
- location of the premises.

The greater the potential risk of causing harm to the amenity or causing a nuisance the more effective the odour abatement must be. In certain circumstance where local planning requirements restrict the use of tall stacks more emphasis must be placed on odour abatement.

### *4.7.1 Pre-conditioning of extracted air*

*Emission control system tend to be considerably less effective if the air passing through the ductwork is too hot:*

- *At high duct temperatures grease/fat/moisture is less likely to form droplets and will not be removed by grease (particle) separators (e.g. fabric filter, ESP) located close to the extraction hood.*
- *If the high temperature persists down the duct, the grease/fat may either pass through the odour control stage (e.g. the carbon filter) with little odour control having occurred or may condense and 'blind' the leading face of the carbon filter.*

*There are various options for pre-conditioning the extracted air to reduce the heat content in the ductwork:*

- *By introducing ambient air to dilute the airstream and reduce the temperature of the air in the duct. The downside of doing this is that greater energy is required to move the increased air volume which in turn will require bigger noisier fans, larger ductwork and up rated, larger filtration control equipment.*
- *By installing a cooling system based on a finned coil within the duct work and passing a suitable heat exchange medium through it to remove the heat. In such systems there are energy considerations for cooling the airstream and maintenance considerations with equipment becoming blocked when exposed to smoky greasy air streams.*
- *By installing a cold water misting system to run continuously during cooking operation. Vapour entering the canopy passes through the mist which causes the grease particles in suspension to drop in temperature, solidify, increase in size and drop to a drainage trough from which it is flushed to a drain. The mist system is also suitable for solid fuel appliances where the mist will cool the extracted gas and also extinguish hot embers that may be drawn up into the canopy.*

**Figure 7: Example of cooling coil used to pre-condition extracted air**



### 4.7.2 Coarse or Grease separation

*The effective removal of particulate matter from the extracted air is a crucial step as it removes oil/grease odours from the extracted air. Its removal (i) prolongs the operational life of the odour control equipment and (ii) minimises cleaning/maintenance requirements.*

*The design of grease separators should meet the following minimum standard:*

- *Grease separators shall be manufactured in stainless steel.*
- *Grease separation is primarily used in extract systems for the removal of flammable grease deposits. Removal of grease also removes odour from the extract flow and so improves the performance of odour abatement.*
- *The grease extracted by the separators must be collected and removed so that it will not accumulate in either the canopy plenum or the ductwork system, or, fall back onto the cooking surface. In the event of fire, the filter shall also limit the penetration of flames downstream into the canopy plenum.*
- *The separator shall be easily removable for regular cleaning.*
- *Primary grease separators should be flame retardant and capable of removing as much airborne particulate (i.e. grease, oil etc) from the air stream as possible, to maximise the separation process within the canopy.*
- *Secondary mesh type impingement filters can be incorporated to the rear of the primary separators providing they do not affect the fire arrestance.*

**Figure 8: Typical airflow through a grease filter housing**

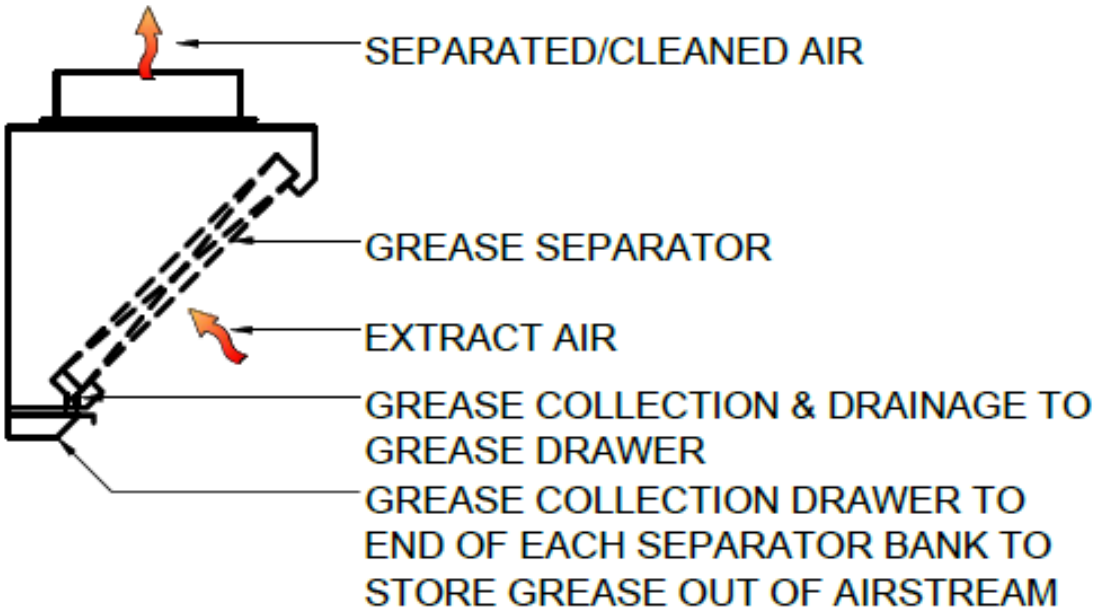


Filtration can be provided by either washable or baffle type of filters and are usually positioned at the point of extract within a filter housing. Disposable grease filters should not be used. A range of coarse filters are available, and the characteristics of these filters are summarised Table 11.

**Table 11: Summary of characteristics of some common coarse filters**

| Filter Type | Recommended Face Velocity (m/s) | Typical Efficiency* | Advantages | Disadvantages |
|---|---|---|---|---|
| Mesh **(use as secondary separator only** | 2.0-5.0 | 40-50% | • Inexpensive<br>• Low pressure drop when<br>• clean | • Grease held in air<br>• stream<br>• Variable pressure<br>• drop<br>• Potential fire hazard |
| Baffle | 4.5 - 5.5 (at slot) | 65 - 80% | • Inexpensive<br>• Non-overloading pressure drop | • Higher pressure drop than mesh filters |
| Cartridge | 4.5 - 5.5 (at entry) | 90 - 95% | • Higher efficiency<br>• Non-overloading pressure drop | • High pressure drop<br>• Special plenum fabrication required |
| Water Wash | 4.5 - 5.5 (at entry) | 90 - 95% | • Higher efficiency<br>• Non-overloading<br>• Low maintenance | • Expensive<br>• Very high pressure drop<br>• Hot water supply and drains required |
| Cold Water Mist | 4.5 - 5.5 (at entry) | 90 - 98% | • Very efficient<br>• Non-overloading<br>• Low maintenance | • Expensive<br>• Very high pressure drop<br>• Hot and cold water supplies and drains required |

*manufacturer's data.

### Mesh or impingement filters

These filters comprise a number of layers of galvanised or stainless steel mesh within a steel housing. Grease laden air is deposited onto the non-corrosive mesh. Their application is limited to low level grease production. A mesh of less than 50 mm is unlikely to be effective. The performance varies with use and temperature and may need to be cleaned twice weekly to avoid grease build-up. Mesh filters provide no barrier to flames and therefore should not be used either at low level or in applications where there is a risk of fire. A mesh filter should be installed at an angle of not less than 45° from the horizontal.

**Figure 9: Example of a mesh filter [no longer recommended for primary grease separation].**



### Baffle filters

These filters comprise of a number of interlocked vanes which when assembled, form a two-pass grease removal device. Grease laden air passes through the filter and by a series of forced changes in direction and velocity, the grease becomes separated from the air stream and is deposited on the vertical vanes. The deposited grease is then drained off through weep holes spaced at intervals and into a collection drawer that has to be cleaned at regular intervals. The size of the grease drawer should be sufficient to suit the type of cooking and frequency of cleaning. The grease drawer must be isolated from the air stream otherwise re-entrainment can occur.

The resistance to air flow in a baffle filter is higher than with mesh filters, but pressure drop remains constant and blades provide a barrier in the event of a flash fire. A baffle filter should be installed at an angle of not less than 45° from the horizontal.

**Figure 10: Typical Baffle filter**



### Cartridge filters

Installed horizontally, cartridge filters comprise a high velocity slot opening on to a series of baffles which cause air to change direction four times compared to only twice in a conventional baffle filter. The cartridge filters are installed over the full length of the extract plenum and should be sloped to allow trapped grease to fall through a drain to a grease drawer. These filters are intended for heavy grease loads. Having a higher velocity enables lower air volumes to be used. Air balancing is required to prevent carry over of grease.

### Water wash systems

These systems comprise an extract plenum similar to the cartridge filters, except that there is an inbuilt self-cleaning system. This provides routine maintenance as well as fire protection to the plenum and duct. A water wash canopy is operated by a control panel. In its simplest form it is started and stopped at the beginning and end of the cooking process each day. Automatic systems are available. Cleaning is achieved by spraying the interior of the canopy extraction system chamber with pressurised hot water containing detergent. The waste water flows from the system to a drain.

### Continuous cold water mist systems

These systems are similar to water wash system in which grease extraction is enhanced by means of a cold water spray that runs continuously during cooking operation. The vapour entering the canopy passes through the mist, which causes the grease particles in the suspension to drop in temperature, solidify, increase in size, and drop via a drain trough to a drain. These systems are particularly suitable for solid fuel appliances where the mist will extinguish hot embers that may be drawn into the canopy. The cleaning regime is the same as for a water wash system.

**Figure 11: Example of water spray self-cleaning hood system**



### 4.7.3 Fine filtration

A basic filtration system can be used to deal with a low intensity odour problem, but more usually will form a protective pre-treatment step before an activated carbon step.

A typical filtration system may be supplied with three stages of progressively more efficient filtration. This would include:

- Disposable pleated filter acting as a secondary grease filter to protect the main pre-filters. This filtration stage may be manufactured from non-woven synthetic fire retardant material.
- Medium efficiency bag filter ideally achieving a capture efficiency of 95%.
- Absolute filter ideally achieving a capture efficiency of 99%.

With high efficiency or absolute filters high pressure drops can be expected. This system will not deal with the gaseous phase odours and may be preceded by a carbon filter. The filtration step protects the carbon filter from becoming fouled with grease and particulate matter. Plate 6 (Annex E) shows a pleated filter and a bag filter.

**Figure 12: Various types of filters used within the extraction system.**



***Bag filter*** *- generally used as a second stage filter to remove smaller particles of grease. Not capable of removing smoke efficiently. This filter needs to have a pre filter to stop it blocking prematurely.* ***This is not an Odour filter****.*



***Panel filter*** *– generally used as first stage filter to remove some of the larger grease particles not removed by the canopy filter. This filter will not remove any smoke.* ***This is not an Odour filter****.*



***HEPA filter*** *– this is a sub-micron filter used for removing some smoke (depending on grade). It must have panel and bag pre filtration. These filters will block quickly if not protected.* ***This is not an Odour filter****.*

Various filter types and classifications are available. A list of available filters is summarised Table 12: together with their rating and quoted efficiencies.

**Table 12: Filter types classification**

| | | |
|---|---|---|
| ISO 16890[5] | ISO 16890 | EN779[6] |
| High End | Low End | -- |
| None | none | G1 |
| Coarse 40% | Coarse 30% | G2 |
| Coarse 50% | Coarse 40% | G3 |
| Coarse 70% | Coarse 50% | G4 |
| ePM10 60% | Coarse 85% | M5 |
| ePM2.5 50% | ePM10 75% | M6 |
| ePM1 75% | ePM1 50% | F7 |
| ePM1 80% | ePM1 70% | F8 |
| ePM1 85% | ePM1 80% | F9 |

### 4.7.4 Electrostatic precipitation

Electrostatic separators (ESP) are used to separate solid or liquid particles from ventilation air. The particles distributed in the gas are electrostatically charged so that they stick to collection plates. Within an ESP there are five individual stages:

- charging of the particles in the ion field;
- transport of the charged particle to the collecting plate;
- collection and film formation on the collecting plate;
- removal of the oil film from the collecting plate to a sump or holding area; and
- removal of the collected oil and other particles during service.

The main components of an ESP are the filter housing, power supply, ioniser and collecting electrodes

*The use of an ESP in a kitchen extract system requires some design specifics which are operationally important, examples of which are below:*

- *The ESP must be sized to treat the grease loading so that the ESP system acts as the grease collector. The ESP should not simply act as an ioniser that then uses the duct and other external surfaces to collect the ionised grease. This design requirement improves odour control and fire safety.*
- *The unit should have a sump that is capable of holding the grease collected. This sump should be sealed to prevent grease leakage. Units without a sump will result in grease leaking out into ceiling voids or onto the roof and creating a hazard. Ideally a fully welded case construction should be used to avoid leaks.*
- *Use of a High Voltage system with a negative corona discharge has the advantage that it also produces Ozone which will assist with odour control.*
- *The ESP circuit should be designed with a safety cut off so if the collector plates are bridged (short circuited) or damaged the power circuit will switch off. Ideally the system should have an automatic restart function.*
- *Where the system is installed outside the duct work housing it should be designed to the IP rating of the external installation, this avoids the need to add additional protection.*
- *For highly grease/smoke laden air a multi pass ESP system should be considered.*

[5] ISO 16890-1, Air filters for general ventilation – Part 1: Technical specifications, requirements and classification system based upon particular matter efficiency (ePM).
[6] EN 779:2012, Particulate air filters for general ventilation – Determination of the filtration performance.

ESPs can be designed to eliminate extensive quantities of smoke, giving collection efficiencies of up to 98% between 1 $\mu m^3$ and 0.01 $\mu m^3$. The effectiveness of an ESP is limited to removing the grease that adheres to smoke and should not be considered to be a primary source of odour control. Where installed, pre-filters should be fitted upstream of the ESP to provide some protection from large contaminants that may pass through the grease filters. The types of ESP that are used to treat kitchen ventilation emissions are less effective at temperatures over 60°C and are not suitable for relative humidity levels of above 75%.

Where an ESP is used to treat oily fume the collecting plates can become fouled, rendering them less effective. Monthly servicing should be the minimum requirement and they should be cleaned immediately as soon as there is any sign of deterioration in fume control. Some manufacturers have incorporated automatic self-cleaning mechanism into their equipment to facilitate automatic daily cleaning.

**Figure 13: schematic drawing of an electrostatic precipitator**

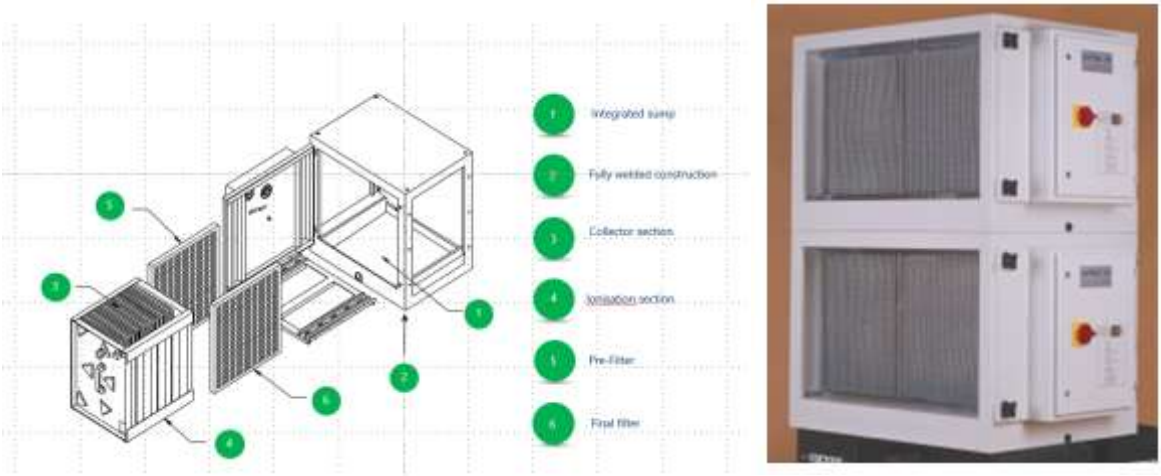


**Figure 14: Odour control scheme employing an electrostatic precipitator, operating alongside grease separation and UV-C/Ozone**



### 4.7.5 Adsorption

Adsorption is a process involving the capture of airborne components on to a fine particulate active surface. There are a number of possible active materials that can be used for general application but activated carbon is by far the most widely used. Other materials used are: Zeolites, silicas and polymeric resins. Activated carbon systems are available that include impregnated oxidising materials e.g. chlorine dioxide or permanganate, although such materials tend to be more expensive.

Adsorption is a dynamic process in which gaseous molecules impinge on the surface of the solid material and remain there for a period of time before desorbing again in to the gas phase. An equilibrium is established between the adsorption and desorption processes. For the majority of odorous emissions, where the organic mass emission is low, the equilibrium amount of adsorbed material increases rapidly with small increases in concentration. Thus, the adsorption process allows a positive driving force for adsorption up to a point where the equilibrium position changes and the odour concentration in the outlet exhaust increases. This is the point at which the carbon has been fully utilised and there are insufficient active sites remaining for further adsorption. The adsorption bed has thus reached the end of its useful life and will require replacement or regeneration.

The adsorption process, ensuring odorous components adhere to the matrix, can be physical e.g. adsorbed molecules are held to the surface by Van der Waals forces, or chemical e.g. chemical bond form between the adsorbed molecules and the surface. Adsorption, using carbon as a matrix, can be a very effective abatement option, with odour removal efficiencies in the range 80 to 99% achievable.

Design considerations for adsorption systems include:

- Residence time typically of between 0.1 to 0.2 seconds for gas streams containing relatively low concentration of odorants (this can rise to 1 to 3 seconds for gas streams containing relatively high concentration of odorants).
- A temperature of 40°C is considered as an upper limit for an adsorption process.
- The efficiency of activated carbon is reduced at a relative humidity above 75%. The preferential adsorption of water can lead to condensation within the bed, thus rendering the carbon inactive.
- Linear velocities through the bed can range from 0.1 to 0.6 m/s. The higher linear velocities are only suitable for dealing with compound that has higher adsorption rates.
- Particles in the gas stream to be treated seriously interfere with the efficiency of the carbon bed, as well as increase the operating pressure drop. If particulate or condensing material is present the use of carbon filtration is very questionable.

Manufacturer's guidance is available to determine the appropriate operating parameters for different types of commercial kitchen situations. Table 13 summarises the required residence times for various cooking processes.

**Table 13: Required residence times for various cooking processes**

| Application | Capacity Required | Residence Time (seconds) |
|---|---|---|
| Canteen, normal kitchen and restaurants | 'Normal' | 0.1 – 0.2 |
| Kitchens producing large amounts of fried foods or concentrated cooking of burgers | 2 times 'normal' | 0.2 – 0.4 |
| Indian restaurants etc. (i.e. curry, spices etc.) | 3 times 'normal' but 4 times in extreme cases | 0.3 – 0.6 (up to 0.8 in extreme cases) |
| Excess of onions or garlic smells from cooking | 3 time 'normal' but 4 times in extreme cases | 0.3 – 0.6 (up to 0.8 in extreme cases) |

*Note the residence time presented here assumed that the particulate matter associated with grease and/or smoke has been adequately abated and that the carbon filter just has to deal with the residual odour.*

### 4.7.6 Wet scrubbing (absorption) systems

*Section of scrubbing has not been reproduced as this technology is not suited to the relatively small-scale nature of most commercial kitchen situations. The Authors were unable to find example applications to justify continued inclusion of this text.*

### 4.7.7 In-line oxidation systems

Oxidation using ozone and/or activated oxygen ions has been used to treat odour emissions from commercial and industrial kitchen processes. Such systems use electrostatic field or UV lamps to convert oxygen in the ambient air to oxygen ions with a small amount of ozone. A mixture of oxygen ions and/or ozone is then injected into the airflow of the exhaust duct or into a reaction chamber where reaction occurs with the odour and other pollutants. Odours are oxidised in the reaction chamber and the treated air is expelled.

Ozone and oxygen ions are inherently unstable, and high moisture or temperatures above 35$^{o}$C will promote ozone and oxygen ion degradation.

A typical dose rate for an ozone system treating exhaust gases from a restaurant will be 1 ppm/. Average reaction times to completely oxidise material can be as high as 20 seconds. This reaction time needs to be taken into account when designing duct work downstream of the injection device.

Due consideration needs to be given to the residual ozone that may arise from these systems. Complete degradation of ozone is unlikely to take place within the duct work and therefore extraction system must discharge at high level. There will need to be restricted application of these systems in areas housing multiple commercial kitchens.

**Figure 15: illustration of a UV/Ozone unit as part of a kitchen extract system**



### 4.7.8 Odour neutralising and counteracting agents

There are a number of products on the market claiming that odour emissions can be ‘neutralised’ by the addition of certain components into the air stream. The exact definition of the neutralisation is slightly misleading and generally refers to a chemical reaction in which the odorous molecule is rendered non-odorous by chemical reaction with the added ingredient.

The neutralising agent is incorporated into an air stream by aspiration. A number of the products on the market refer to the use of 'essential oils' derived from plants, trees, wood etc. There are a number of mechanisms postulated as to what occurs during the 'neutralisation' process, although the exact mechanism(s) are not fully understood. Particular mechanisms suggested include Van der Walls forces, where the molecule weakly bonds on to the odorous component, or chemical reaction. Because the mechanism of this system is not well understood it is difficult to define performance characteristics. Manufacturer's data suggests that odour removal rates of 90% can be achieved when used in conjunction with appropriate particulate abatement.

Counteracting agents, as the term implies, are added to the air stream and result in a reduced response to the odour by the human nose by reducing the perceived intensity. Thus in effect, the counteracting agent desensitises the human nose and renders the discharged odour undetectable by the olfactory sensors in the nose. As this type of system does not remove odour the level of odour removal is likely to be negligible.

With these systems correct chemical dosing is critical as the chemical agent that is injected into the air stream can also give rise to odour annoyance. Such systems should be avoided where the dispersion of the discharging plume is severely impeded, e.g. in courtyard situations.

**Figure 16: Example of an odour neutralising unit**



### 4.7.9 Stack

Inadequate height of the discharge stack is one of the main reasons the emissions from a kitchen gives rise to odour nuisance. The stack design is paramount to achieving good dispersion. Good stack dispersion requires:

- The effective stack height (discharge height plus plume rise) must be high enough to ensure that adequate dilution takes place before the plume interacts with a receptor.
- Discharge velocity influences the plume rise and therefore the effective stack height. The effective stack height can be estimated from:

$\Delta H = 3W.d/U$

where,

W (m/s) is the efflux speed at the chimney top

U (m/s) is the wind speed at the height of the stack

d (m) is the internal diameter of the stack

Ideally W/U should be greater than 4, but this may be impractical. If W/U is less than 1.5, then down wash will occur resulting in a reduced effective stack height. *In essence, the exit velocity should never be less than 1.5 times the wind speed. As the average wind speed in the UK is approximately 4.8m/s, the efflux velocity should never be less than 7.5m/s and preferably should be about 15m/s.*

- The discharge to be outside the wake of nearby buildings. Discharging ventilation air below a roof ridge may result in excessive entrainment within building down wash. In certain situations, the use of high velocity discharge systems can force the discharging plume out of the building wake.
- The flow to be unimpeded. This can increase the static pressure, noise, potential down draught and risk of re-entry of the exhaust back into the building. Alternative stack terminals are available and include:

a) terminals without integral drains e.g. reducing cone, solid top cones; and

b) terminals with integral drains e.g. open top cone and drain, induction types and sleeve type.

- Straight and vertical discharge.

Figure 17 shows examples stack terminals with integrated drains

Guidance on stack requirements for commercial kitchens varies between Local Authorities. The range of guidance issued by Local Authorities is summarised below:

- Guidance on the minimum stack height ranges from:

a) 1 m above the eaves of the premises and/or above any dormer window;

b) 1 m above ridge height of any building within 15 m; and

c) low level discharge should be avoided.

- The height of external ground level should be taken into account when setting stack height. This is particularly important on rising ground where houses may be located above the discharge.
- A stack should be positioned to be as far as possible from the nearest residential accommodation.
- A stack discharging into a semi-enclosed area such as a courtyard or the area between back additions should be avoided.
- Use of Chinaman's hats or other cowls *which impede the upward air flow* is not recommended. *The exception to this is the use accelerator cowls which promote upward velocity and increase the effective stack height.*
- The prevailing wind direction should also be considered in the ducting positioning.
- The ducting should be rigid in construction to prevent the transfer of noise by vibration.
- Large section ducts may need bracing or stiffeners to prevent drumming.

In certain instances, restriction on stack height might arise, for example:

- Where an A3 premises is a listed building and a visible stack is prohibited;
- Where an A3 premises is located within a conservation area and a visible stack is prohibited; and
- Operators of the A3 premises do not have legal right to attach a stack to upper floors of building.

**Figure 17: Examples of best stack design**

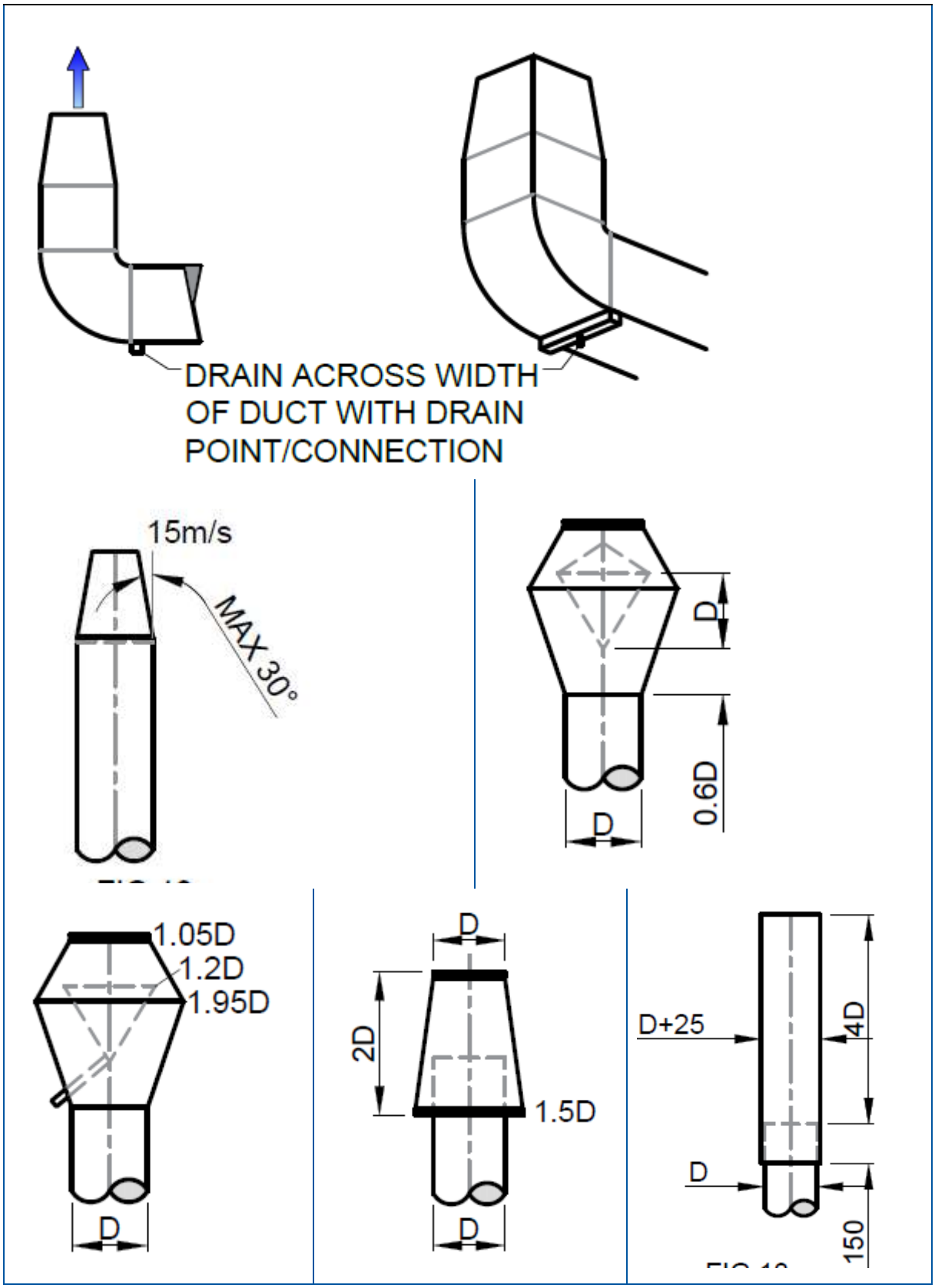

**Figure 18: Case study material: examples of poorly designed discharges from commercial kitchens**

| | |
|---|---|
|  | Vent releasing horizontally, Note the grease leaking from the joint. May suggest a poor maintenance regime is applied. |
|  | Visible plumes arising from a restaurant indicating that grease emissions are not abated.<br>Vents not releasing vertically |
|  | |
|  | Horizontal release from the extraction system at first floor level |

### *4.7.10 Package abatement plant with treated air recirculation*

*Commercial products are now being developed to place all of the elements of a complete emission control systems into packaged unit with a view to recirculating treated air back into the kitchen. These systems are suited to kitchen developments that have severe restrictions on the discharge stack that can be used, or where bulky control plant external to the kitchen is undesirable. Such system may have application where:*

- *The kitchen can be designed using electric appliances. This minimises the rate of ventilation required to avoiding carbon dioxide/monoxide building up in the kitchen due to combustion of natural gas.*
- *There is no or very limited route to atmosphere (e.g. within an airport terminal, submarine).*
- *Conservation controls limit external structures.*

*The units typically contain:*

- *Primary filter sets to provide secondary grease separation; and*
- *Activated carbon canisters for odour removal.*
- *A ductwork arrangement to recirculate some of the treated air back into the kitchen.*

*Recirculating filtration systems do have a place, but they are limited and are unlikely to meet the requirement for BPM. Firstly, they should only be considered for use with electric cooking appliances and not for gas, wood fired or other combustible processes. The filtration equipment needs to be multi stage with a high level of efficiency which makes it both expensive and bulky. Many of the applications where a recirculating system would be suitable are in premises where there is insufficient space to use them.*

Case study 4 – design of kitchen with a package abatement plant

Due to changes in circumstances relating to the ownership of the neighbouring property the operator of a kitchen preparing Mediterranean type food was no longer able to discharge air through their existing extract stack as part of the stack crossed the boundary between the two properties.

One of the solutions considered was the redesign of the kitchen to accommodate a packaged abatement system. This involved:

- Changing cooking appliances from gas to electric. This reduced the extraction air flow requirement by about 30% (see convection calculation method in DW172);
- Installing a package abatement plant within the kitchen area;
- Designing the ductwork to allow returned air to be reintroduced into the kitchen area to provide supply air.

The practical benefit is that only a small volume of treated air need be released from a small wall vent.

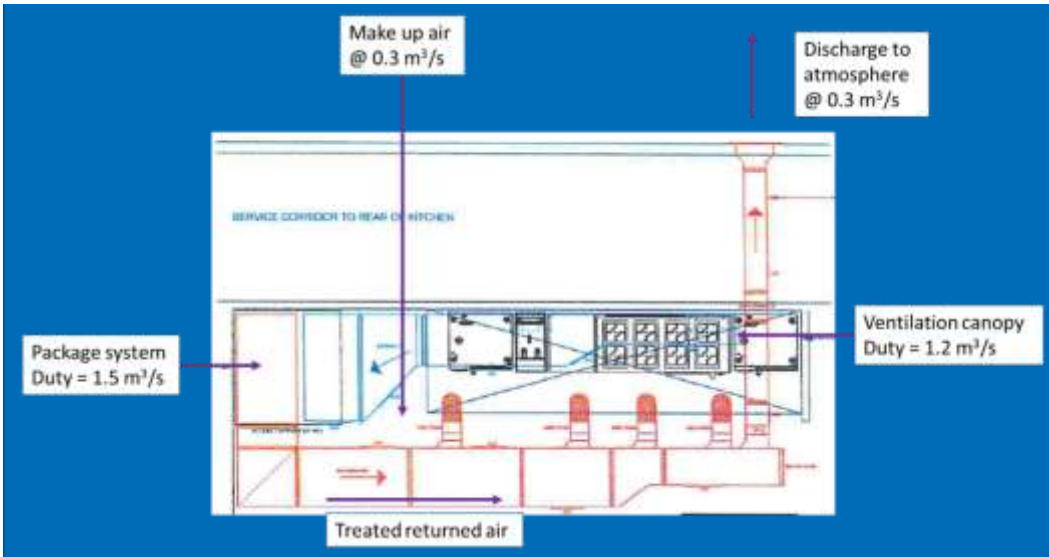


The other practical considerations with this design are:

- The loss of space taken up with the package abatement equipment within the kitchen itself.
- The high cost of retrofitting the kitchen with new appliances;
- The need to training staff to cook with the new appliances;
- The potential need for an air conditioning system to condition the returned air to remove residual heat.

On balance, although the design basis of the package system is comparable to control systems used elsewhere, it is likely to be much more expensive than installing a conventional system and therefore may exceed the requirement of BPM.

### 4.7.11 Summary of grease and odour mitigation measures

The advantages and disadvantages of various odour mitigation approaches are summarised in Table 14.

**Table 14: Summary of odour mitigation measures that can be applied to treat kitchen ventilation air**

| | Advantages | Disadvantages |
|---|---|---|
| Grease filters | • Filters are easy to clean and maintain | • *Only relatively coarse filtration*<br>• Performance rapidly decline if not regularly maintained and cleaned |
| Fine or pre-filters | • Low capital cost<br>• Filter change easily carried out<br>• Low-tech alternative to ESP | • Regular replacement required<br>• No gaseous odour removal<br>• High pressure drop<br>• *High cost of maintenance* |
| ESP | • Low pressure drops<br>• Effective down to very small particle size<br>• No filter replacement necessary<br>• *Some gaseous / odour oxidization possible if using negative corona discharge* | • Medium capital cost<br>• Potential fire risk unless safety features present *(e.g. will shut the supply down with excessive arcing).*<br>• High-tech equipment requiring specialist maintenance |
| Carbon adsorption | • High efficiency up to 95% under optimum conditions<br>• Moderate operating costs<br>• Relatively low capital cost<br>• Simple design | • Filter blockage requires regular replacement<br>• Must be used with fine particulate filtration<br>• Efficiency decreases with use<br>• Not effective against particulate components<br>• Temperature of input must be below 40$^{o}$C<br>• Sensitive to high moisture above 75%RH<br>• Constant and detailed maintenance required |
| Ozone and UV systems | • Minimal pressure drop<br>• Effective | • Requires pre-filtration<br>• Medium capital cost<br>• Efficiency falls off as UV lamps become dirty<br>• Dilution and dispersion of residual necessary high energy usage<br>• Long residence time required |
| Odour counteraction and neutralisation | • Minimal pressure drop<br>• Minimal maintenance | • Requires pre-filtration<br>• Medium capital cost<br>• Dilution and dispersion of residual necessary<br>• Efficacy for aromatic cooking sources questionable |
| Stack dispersion | • Low capital and running costs<br>• Good dilution possible | • May require tall structure to eaves or above |

## 4.8 Noise Attenuation

Due to the fact that kitchen extract systems usually operate at sensitive times such as early in the morning and until late at night, the amount of noise generated should be kept to minimum. A range of noise mitigation methods is available, ranging from good design practice through to lagging and silencers (see Table 15) Typical noise transmission pathways in commercial kitchens are presented in Table 16.

**Table 15: Summary of noise reduction methods for various noise sources and transmission paths**

| Path | Description of Transmission path | Noise reduction method |
|---|---|---|
| (a) | Direct sound radiated from sound source to ear.<br>Reflected sound from walls, ceiling, and walls. | Direct sound can be controlled only by selecting quiet equipment. Reflected sound is controlled by adding sound absorption to room and to location of equipment (either wall mounted or barriers). |
| (b) | Air and structure borne sound radiated from casings and through walls of ducts and plenums is transmitted through walls and ceiling into room. | Design ducts and fittings for low turbulence; locate high velocity ducts in non-critical areas; isolate ducts and sound plenums from structure with neoprene or spring hangers. Overclad ducting with absorbent materials |
| (c) | Airborne sound radiated through supply and return air ducts to diffusers in room and then to listener by path (a). | Select fans for minimum sound power; use ducts lagged with sound absorbing material; use duct silencers or sound plenums in supply and return air ducts. |
| (d) | Noise is transmitted through plant/equipment room walls and floors to adjacent rooms. | Locate equipment rooms away from critical areas; use masonry blocks or concrete for equipment room walls and floor. Use acoustic isolators on wall or floor mountings. |
| (e) | Building structure transmits vibration to adjacent walls and ceilings from which it is radiated as noise into room by path (a). | Mount all machines on properly designed vibration isolators; design equipment room for mechanical dynamic loads; balance rotating and reciprocating equipment. |
| (f) | Vibration transmission along pipe and duct walls. | Isolate pipe and ducts from structure with neoprene or spring hangers; install flexible connectors between pipes, ducts, and vibrating machines. |
| (g) | Noise radiated to outside enters room windows. | Locate equipment away from critical areas; use barriers and covers to interrupt noise paths; select quiet equipment. |
| (h) | Inside noise follows path (a) | Select quiet equipment. |
| (i) | Noise transmitted to diffuser in a room into ducts and out Through an air diffuser in another room. | Design and install duct attenuation to match transmission loss of wall between rooms. |
| (j) | Sound transmission through, over, and around room partitions. | Extend partition to ceiling slab and tightly seal all around; seal all pipe, conduit, and duct penetrations. |

**Table 16: Typical noise transmission pathways in commercial kitchens**

| Noise Source | Transmission Paths |
|---|---|
| Circulating fans; grills; diffusers; registers; unitary equipment in room | (a) |
| Induction coil and fan-powered mixing units | (a), (b) |
| Unitary equipment located outside of room served; remotely located air handling equipment, such as fans and blowers, dampers, duct fittings and air washers | (b), (c) |
| Compressors and pumps | (d), (e), (f) |
| Cooling towers; air cooled condensers | (d), (e), (f), (g) |
| Exhaust fans; window air conditioners; passive vents; open windows | (g), (h) |
| Sound transmission between rooms | (i), (j) |

The following points should be taken into account when designing a ventilation system to minimise noise emissions:

- the fan and its installation should be designed as a complete package for a specific task. Fans generally produce less noise if operated at the optimum efficiency relative to their characteristics;
- fans should be located within buildings at low level, that is, on side walls, rather than in the roofs of buildings, as ground effect and the local topography will far more readily reduce the noise transmission;
- a duct with stiff walls will vibrate less than a flexible one and will therefore have lower noise attenuation and break-out noise;
- circular ducts have slightly higher attenuation than rectangular ducts, as circular ducts have greater wall stiffness and allow less break out of noise;
- lined or lagged ducts, including bends. elbows or spigots, may be required if noise reduction is necessary; and
- the recommended maximum supply and return velocities for grilles and terminals should be applied (see Table 17).

**Table 17: Maximum velocity for supply and return air openings (grilles and terminals)**

| | Permitted air velocity (m/s) | | |
|---|---|---|---|
| | **Critical** | **Normal** | **Uncritical** |
| Supply | 1.5 | 2.5 | 3 |
| Return | 2 | 3 | 4 |

- Silencers may be required where additional attenuation is necessary. A range of silencers is available, and it may be necessary to insert in-duct silencers both upstream and downstream to prevent radiation of fan noise through ductwork. Figure 18 shows examples of dissipative duct attenuators. These should be fitted as close to the fan as possible (but not so close as to lead to a non-uniform air–flow velocity across the face of the silencer). Where this is not possible, the intervening ductwork should be acoustically lagged. It may also be necessary to enclose or lag the fan. Where fans are used to push gases up a stack, silencers containing absorbent material can sometimes be mounted directly on top of the stack. However, where gases are hot, wet or dirty, the infill may need to be protected.
- Acoustic louvres or air splitters on exhausts and inlets can greatly reduce environmental noise. However, their performance can sometimes increase back-pressure or the velocity of the air flow leading to increased noise. Air flows should be carefully managed.

**Figure 19: Dissipative duct attenuators**

**(a) rectangular, (b) circular (c) rectangular elbow**

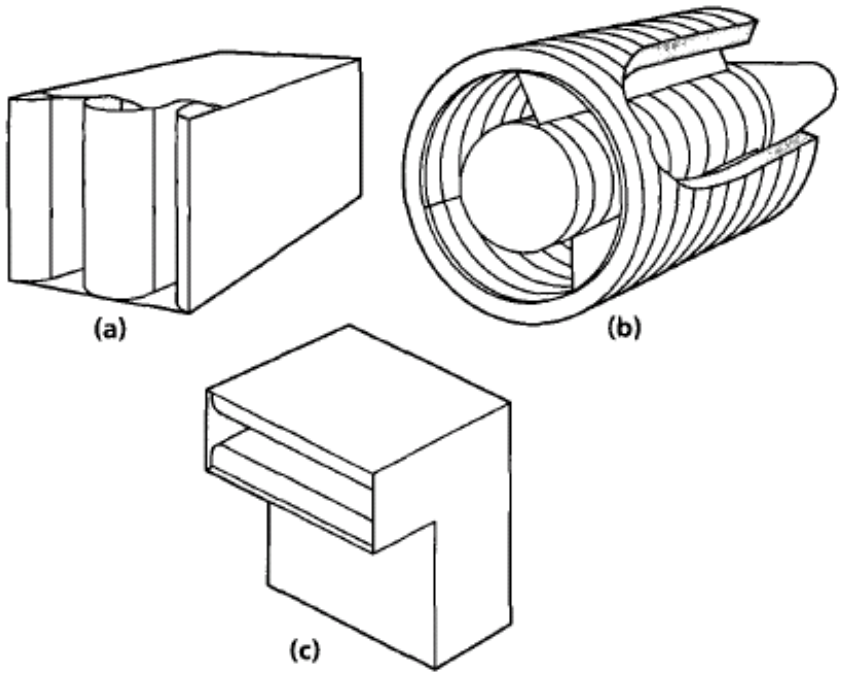


**Table 18: General rules of thumb for selection of ductwork:**

| Duct Type | Advantages | Disadvantages |
|---|---|---|
| Round duct | 1. Efficient way of conveying air with low pressure drop, which translates to less fan horsepower.<br>2. Better acoustic performance because the curved surfaces allow less breakout noise.<br>3. Better aesthetic look (if exposed).<br>4. Lower initial installation cost. | 1. Architecturally difficult to fit compared to rectangular to round ductwork transition fitting from fan coil unit to main duct (if exposed)<br>2. Small height clearance |
| Rectangular duct | 1. Typical rectangular to rectangular connection from FCU to main duct.<br>2. Good height clearance. | 1. High pressure drop.<br>2. Increased noise.<br>3. High installation cost. |

## 4.9 Fire Suppression

The significant presence of flammable grease and related particles contained within kitchen extract systems, combined with the possibility of fire ignition caused by the cooking equipment, creates a hazard level above that which is normally encountered in other ventilation systems.

Where ventilation systems exhaust grease laden air and vapour mixtures from a kitchen, the design should provide an acceptable level of protection to ensure the wellbeing of occupants and fire fighting personnel, and limit the damage to the property and cooking equipment.

The correct maintenance and use of cooking appliances and ventilation systems should prevent potential fire. It is however important that in the event of a fire it is immediately detected and extinguished and prevented from spreading to other areas of the building.

Fire suppression is the most commonly used form of protection from fire. These systems use agents, which provide protection to the kitchen canopy.

**Chemical systems.** Almost all fire suppression or extinguishing systems use special chemical agents which provide protection to the kitchen canopy. Liquid or dry chemical agents can be used for fire suppression. Liquid agents are favoured as they provide a greater level of cooling and clean up time is quicker.

These systems are activated either manually or automatically in the event of fire. Calibrated thermal fusible links should be located in the extract air path above the cooking equipment.

On activation the mains energy supply should be automatically shut off and terminated. The stored chemical agent will be released into the distribution ductwork and discharged at high velocity through nozzles towards the appliances that require protection. When the extinguishing agent comes into contact with hot greasy surfaces, foam is formed that suppresses fire (saponification).

**Water systems.** These systems are almost identical to chemical systems except the system can only be used where a sprinkler main is available. Nozzles with suitable temperature ratings supplied with water directly from the main sprinkler storage system are used to spray a fine mist of water onto the cooking appliances. These systems can target the area where the fire occurs, so causes less 'down-time'. Using water has a duel function when fighting fires in that the spray absorbs heat generated and becomes steam, which in turn displaces air and starves the fire of oxygen.

**Carbon dioxide.** Systems are available but are expensive.

Detailed advice on fire protection systems is laid down in BS 5588: Part 9 and Association for Specialist Fire Protection publication 'Fire rated and smoke outlet ductwork: An industry guide to design and installation'.

## 4.10 Financial Considerations

### 4.10.1 Cost of odour abatement equipment

The cost of odour abatement equipment is of paramount importance when a kitchen ventilation system is designed for new premises (to protect the amenity) or upgraded to minimise the impact of an existing premises (to prevent statutory nuisance). The factors that dictate the level of expenditure that an operator can be expected to pay will depend on a number of factors:

- Size of the cooking facility;
- Type of food prepared;
- Type of cooking appliances used; and
- Compliance with the requirements of Best Practicable Means.

For the purpose of this report, interpreting Best Practicable Means must take into account the following:

- **Local conditions and circumstances** will vary from case to case and will depend on the proximity of residential properties and local planning restrictions.
- **The current state of technical knowledge** for controlling odour is described in section 4.7 of this report. It is recognised that developments are continuously being made in the field of emissions control, so due regard must be given to any new techniques/technologies that can be designed to suit the commercial kitchen situation.
- **The financial implications** of odour control must be weighed against the harm caused by emission of offensive odour to local residents.
- **Operation of the site** for example, the design, installation, maintenance and manner, periods of operation of plant and machinery, and the design, construction and maintenance of buildings and structures etc.

In this section the typical costs of three ventilation systems are presented based on:

- a general kitchen operation situation (Table 19); and
- a high grease/smoke situation (**Table 20**).
- *a very high grease/smoke situation. This system involves a second pass through an ESP* (**Table 21**).

The costing provides an indication of:

- capital cost;
- monthly maintenance and running costs; and
- annual maintenance and running costs.

The costings presented in **Table 21**, Table 22 and Table 23 are based on typical costs in 2018 and consider the following scenarios:

- general situation treated using pre filter panel followed by bag filter (i.e. only grease control);
- general situation treated using pre filter panel followed by bag and HEPA filter (i.e. only grease control);
- general situation treated using pre and fine filters followed by activated carbon;
- general situation treated using pre filter panel, bag filter and HEPA filter followed by activated carbon;
- general situation treated using an ESP followed by activated carbon;
- general situation treated using an ESP followed by odour counteractant;
- general situation treated using an ESP followed by in-line UV/ozone system;
- high or very high grease/smoke situation using an ESP followed by activated carbon;
- high or very high grease/smoke situation using an ESP followed by odour counteractant; and
- high or very high grease/smoke situation using an ESP followed by in-line UV/ozone system.

**Table 19: Anticipated cost of abatement treating odour emissions from a general kitchen operation situation including maintenance and running (M&R) costs**

| Design Flow Rate ($m/s^3$) | Abatement System | Capital Cost | Monthly M & R Cost | Annual M & R Cost | Total Yearly cost |
|---|---|---|---|---|---|
| Up to 1.5 | Panel and Bag | *£750* | *£160* | *£1,100* | *£3,020* |
| | Panel, Bag and HEPA | *£1,800* | *£160* | *£1,800* | *£3,720* |
| | Pre, Fine and CF | *£1,300* | *£160* | *£1,700* | *£3,620* |
| | Panel, Bag, HEPA and CF | *£4,000* | *£160* | *£3,400* | *£5,320* |
| | ESP and CF | *£5,500* | *£175* | *£800* | *£2,900* |
| | ESP and counteractant | *£6,140* | *£175* | *£0* | *£2,100* |
| | ESP and UV/ozone | *£7,000* | *£175* | *£500* | *£2,600* |
| Up to 2 | Panel and Bag | *£1,000* | *£180* | *£1,300* | *£3,460* |
| | Panel, Bag and HEPA | *£2,500* | *£180* | *£2,300* | *£4,460* |
| | Pre, Fine and CF | *£2,500* | *£180* | *£3,400* | *£5,560* |
| | Panel, Bag, HEPA and CF | *£6,000* | *£180* | *£3,900* | *£6,060* |
| | ESP and CF | *£6,500* | *£250* | *£1,000* | *£4,000* |
| | ESP and counteractant | *£7,000* | *£200* | *£0* | *£2,400* |
| | ESP and UV/ozone | *£10,000* | *£160* | *£900* | *£2,820* |
| 2.5 | Panel and Bag | *£1,250* | *£200* | *£1,500* | *£3,900* |
| | Panel, Bag and HEPA | *£3,000* | *£200* | *£2,500* | *£4,900* |

| Design Flow Rate ($m/s^3$) | Abatement System | Capital Cost | Monthly M & R Cost | Annual M & R Cost | Total Yearly cost |
|---|---|---|---|---|---|
| | Panel, Bag and HEPA and CF | *£8,000* | *£200* | *£4,200* | *£6,600* |
| | ESP and CF | *£7,500* | *£250* | *£1,200* | *£4,200* |
| | ESP and counteractant | *£8,000* | *£250* | *£0* | *£3,000* |
| | ESP and UV/ozone | *£11,000* | *£250* | *£1,000* | *£4,000* |
| 3.5 | Panel and Bag | *£2,000* | *£275* | *£2,600* | *£5,900* |
| | Panel, Bag and HEPA | *£4,500* | *£275* | *£4,500* | *£7,800* |
| | Pre, Fine and CF | *£4,500* | *£275* | *£5,100* | *£8,400* |
| | Panel, Bag, HEPA and CF | *£12,000* | *£275* | *£7,600* | *£10,900* |
| | ESP and CF | *£10,000* | *£300* | *£3,000* | *£6,600* |
| | ESP and counteractant | *£10,500* | *£300* | *£0* | *£3,600* |
| | ESP and UV/ozone | *£14,000* | *£300* | *£1,200* | *£4,800* |
| 4.5 | Panel and Bag | *£2,500* | *£335* | *£3,000* | *£7,020* |
| | Panel, Bag and HEPA | *£6,000* | *£335* | *£4,900* | *£8,920* |
| | Pre, Fine and CF | *£6,000* | *£335* | *£6,800* | *£10,820* |
| | Panel, Bag, HEPA and CF | *£14,000* | *£335* | *£8,400* | *£12,420* |
| | ESP and CF | *£15,000* | *£375* | *£4,500* | *£9,000* |
| | ESP and counteractant | *£14,000* | *£375* | *£0* | *£4,500* |
| | ESP and UV/ozone | *£20,000* | *£375* | *£1,500* | *£6,000* |

**Table 20:Anticipated cost of abatement treating odour emissions from high grease/smoke situation**

| Design Flow Rate ($m/s^3$) | Abatement System | Capital Cost | Monthly M & R Cost | Annual M & R Cost | Total Yearly cost |
|---|---|---|---|---|---|
| Up to 1.5 | ESP and CF | *£6,000* | *£155* | *£1,125* | *£2,985* |
| | ESP and counteractant | *£6,150* | *£175* | *£0* | *£2,100* |
| | ESP and UV/ozone | *7000* | *£175* | *£500* | *£2,600* |
| Up to 2 | ESP and CF | *£8,000* | *£250* | *£1,500* | *£4,500* |
| | ESP and counteractant | *£7,000* | *£200* | *£0* | *£2,400* |
| | ESP and UV/ozone | *£10,000* | *£160* | *£900* | *£2,820* |
| 2.5 | ESP and CF | *£8,500* | *£250* | *£1,875* | *£4,875* |
| | ESP and counteractant | *£8,000* | *£250* | *£0* | *£3,000* |
| | ESP and UV/ozone | *£11,000* | *£250* | *£1,000* | *£4,000* |
| 3.5 | ESP and CF | *£12,000* | *£300* | *£6,000* | *£9,600* |
| | ESP and counteractant | *£10,500* | *£300* | *£0* | *£3,600* |
| | ESP and UV/ozone | *£14,000* | *£300* | *£1,200* | *£4,800* |
| 4.5 | ESP and CF | *£17,000* | *£375* | *£6,750* | *£11,250* |
| | ESP and counteractant | *£14,000* | *£375* | *£0* | *£4,500* |
| | ESP and UV/ozone | *£20,000* | *£375* | *£1,500* | *£6,000* |

**Table 21: Anticipated cost of abatement treating odour emissions from very high grease/smoke situation**

| Design Flow Rate ($m/s^3$) | Abatement System | Capital Cost | Monthly M & R Cost | Annual M & R Cost | Total Yearly cost |
|---|---|---|---|---|---|
| Up to 1.5 | ESP and CF | *£6,500* | *£155* | *£2,250* | *£4,110* |
| | ESP and counteractant | *£6,150* | *£175* | *£0* | *£2,100* |
| | ESP and UV/ozone | *£7000* | *£175* | *£500* | *£2,600* |
| Up to 2 | ESP and CF | *£10,000* | *£250* | *£3,000* | *£6,000* |
| | ESP and counteractant | *£7,000* | *£200* | *£0* | *£2,400* |
| | ESP and UV/ozone | *£10,000* | *£160* | *£900* | *£2,820* |
| 2.5 | ESP and CF | *£13,500* | *£250* | *£3,750* | *£6,750* |
| | ESP and counteractant | *£8,000* | *£250* | *£0* | *£3,000* |
| | ESP and UV/ozone | *£11,000* | *£250* | *£1,000* | *£4,000* |
| 3.5 | ESP and CF | *£15,500* | *£300* | *£7,500* | *£11,000* |
| | ESP and counteractant | *£10,500* | *£300* | *£0* | *£3,600* |
| | ESP and UV/ozone | *£14,000* | *£300* | *£1,200* | *£4,800* |
| 4.5 | ESP and CF | *£21,000* | *£375* | *£9,000* | *£13,500* |
| | ESP and counteractant | *£14,000* | *£375* | *£0* | *£4,500* |
| | ESP and UV/ozone | *£20,000* | *£375* | *£1,500* | *£6,000* |

### 4.10.2 Relative cost effectiveness of odour abatement systems.

Table 22 compares the anticipated level of odour control against the estimated cost for installing and operating a system. Of those systems that contain odour control potential the abatement systems fall into two categories:

- Equipment offering good odour removal at a low capital cost but medium to high running costs; or
- Equipment offering good odour removal at a high capital cost with low running costs.

**Table 22: Anticipated relative cost effectiveness based on a well maintained system**

| Abatement Type | Level of Odour Abatement | Capital | Monthly M&R | Annual M&R |
|---|---|---|---|---|
| Panel and Bag | None | Low | Medium | Low |
| Panel, Bag and HEPA | None | Low to medium | Medium | High |
| Pre, Fine and CF | High | Low | Medium | High |
| Panel, Bag, HEPA and CF | High to very high | High | Medium | High |

| Abatement Type | Level of Odour Abatement | Capital | Monthly M&R | Annual M&R |
|---|---|---|---|---|
| ESP and CF | High to very high | High | Low | Low |
| ESP and counteractant | Medium to high* | High | Medium | None |
| ESP and UV/ozone | High | Very high | Low | Low |

* level of abatement difficult to quantify using conventional odour measurement techniques.

### 4.10.3 Cost of noise abatement equipment

Table 23 identifies the cost of noise abatement equipment at varying air volumes.

**Table 23: Anticipated cost of abatement treating noise emissions from kitchen ventilation systems**

| Air Volume | **Fan Housing** | **Acoustic Lagging (Circular Ductwork)** | **Acoustic Lagging (Rectangular Ductwork)** | **Attenuation (Circular Ductwork)** | **Attenuation (Rectangular Ductwork)** |
|---|---|---|---|---|---|
| 1.0m³/s | £1,700 | £110 | £130 | £200 | £250 |
| 3.0m³/s | £1,900 | £180 | £210 | £700 | £400 |
| 5.0m³/s | £2,200 | £210 | £250 | £1,050 | £550 |

Note: All the above costs are based on a fan running at a noise rating of 60NR with an anticipated maintained space noise rating of 40NR.

### 4.10.4 Relative cost effectiveness of odour abatement systems

Table 24 compares the anticipated level of noise control against the estimated cost for installing and maintaining a system.

**Table 24:Relative cost effectiveness of noise abatement systems**

| Noise Abatement Type | Level of Noise Abatement | Capital Cost | Monthly Maintenance & Running | Annual Maintenance & Running |
|---|---|---|---|---|
| Fan Housing | High | Medium | Low | Low |
| Acoustic Lagging (Circular Ductwork) | Low | Low | Low | Low |
| Acoustic Lagging (Rectangular Ductwork) | Low | Low | Low | Low |
| In line Attenuation (Circular Ductwork) | Medium | Medium | Low | Medium |
| In line Attenuation (Rectangular Ductwork) | Medium | Medium | Low | Medium |

Note: The above table uses the costs associated with an average air volume of 3.0 m³/s.

## 4.11 Installation

The following qualification criteria should be considered when selecting specialist design and installation contractors.

- Experience
  - Number of years designing and installing ventilation systems.
  - Demonstration of track record with project references.
  - Total number of operatives directly employed full time in ventilation design and installation work.
  - *The most significant factor is likely to be word of mouth. Good acoustic and ventilation engineers have a proven track record of solving problems. Ask for contacts with other local authority environmental health departments to confirm performance.*
- Affiliation
  - If *odour or noise control is required for the project, then the contractor will need to have an affiliation with a specialist manufacturer or designer in this field.*
  - *If specialist equipment is to be installed ensure that proper maintenance support is available at reasonable cost by properly trained operatives.*
  - Membership of appropriate trade body.
- Quality assurance
  - Work with quality systems or to accredited quality standard
  - Work with materials of certificated acoustic performance
  - *Qualifications and technical training of staff*
- Health and safety
  - Health and safety policy
  - Records of training and competency
  - Safety/accident records
- Insurance
  - Full details of any professional indemnity, employer's liability, public liability and contractors all risk policy, clearly stating any limitations on cover.

# 5 Maintenance Requirements

Proprietors of commercial kitchens are under a duty to ensure that the ventilation system serving the respective premises are maintained and operated effectively.

Good maintenance is a prerequisite for ensuring that a system complies with Best Practicable Means under statutory nuisance provision and will form a key element of any scheme designed to minimise harm to the amenity under planning regulation. Good maintenance is also required by the food hygiene regulations and will minimise the risk of fire.

### 5.1.1 Consequence of Poor Maintenance

Poor maintenance is widely found with control systems. The consequence of poor maintenance is illustrated in the following examples.

***Example 1***

| Time Frame | Performance of System | System Pressure Drop |
|---|---|---|
| New installed or maintained filtration system. | Good flow, optimal grease and odour removal. | Low pressure drop as per design. |
| Period 1 – continued operation. | Flow restriction introduced as fine filtration system becomes blinded with particulate matter. | Increased pressure drop. |
| Period 2 – continued operation. | Flow restriction increases, resulting in the velocity through the system decreasing. This cause increased residence time within filters and improved control. This also causes the face velocity at the canopy to decrease. | Further increase in pressure drop. |
| Period 3 – continued operation and equipment failure. | Eventually blinding of fine filters occurs and adsorption in carbon filter reaches maximum capacity. At this point the system fails completely and grease/odour removal will be negligible. | Further increase in pressure drop until flow within duct work drops. |

***Example 2***

| Time Frame | Performance of System |
|---|---|
| New installed or maintained ESP. | Optimal particulate removal. |
| Period 1 – continued operation. | Coating of charged plates resulting in reduced particulate removal efficiency. |
| Period 2 – continued operation and equipment failure. | Coating of internal surfaces continues until particulate removal efficiency drops significantly. Other maintenance issues such as shorting of electrical equipment will occur. |

Both examples of poor maintenance described above are commonly found in commercial kitchens. The resultant loss in performance is often put down to inappropriate equipment or design. It is however more likely that the main contributory factor in poor performance of grease and odour removal systems is the inadequacy of the maintenance schedule applied to equipment. The optimum maintenance period will depend on the capacity of the equipment installed. It is fair to say that most kitchen ventilation systems are designed with very little excess capacity.

A key consideration in the performance of the kitchen ventilation system is the build-up of debris within the ductwork itself. Good hygiene practice should ensure that the face of the canopy, filters and any other parts requiring cleaning are cleaned regularly to comply with The Food Safety and Hygiene

(England) Regulations 2013 and EU Regulation 852/2004. It is unlikely however that such cleaning will be afforded to the ductwork beyond the canopy and coarse grease filtration system. Material adhering to any other internal surfaces within the duct will contribute to the overall odour emission from the premises. This feature is common with poorly maintained ventilation systems of any kind and will lead to increased and unnecessary loading on any arrestment equipment and can lead to corrosion of the ductwork itself. In extreme circumstances excess debris within a duct work system can be seen as grease and dirt accumulations around seals and joints in the ductwork. This debris is combustible and therefore a potential fire hazard.

Poor maintenance of ventilation systems can also lead to noise complaints. These are often attributed to worn bearings, imbalance due to erosion or damage, dust and deposits on the impeller and in the adjacent ductwork. Additionally, silencers may be damaged, eroded, corroded or clogged and flexible connectors may become brittle or stiff.

### 5.1.2 Recommendations for maintenance

Maintenance of the kitchen equipment should be carried out in order to ensure the system remains as efficient as possible and also to ensure that the ventilation plant remains in good condition.

**Minimum performance requirements of general maintenance of a kitchen ventilation system**

The ideal criteria for the debris accumulation within a ventilation system are as follows:

| | Surface Contaminant Limits | Test Method |
|---|---|---|
| Extract | 6g/m$^2$ | Dust Vacuum Test (VT) |
| | 180 μm | Deposit thickness test (DTT) |
| Recirculation | 1g/m$^2$ | Dust Vacuum Test (VT) |
| | 60 μm | Deposit thickness test (DTT) |
| Supply | 1g/m$^2$ | Dust Vacuum Test (VT) |
| | 60 μm | Deposit thickness test (DTT) |

The maximum allowable debris accumulation within a ventilation system are as follows:

| Wet Film Thickness Test Measurement | Recommended Action |
|---|---|
| 200μm as a mean across the system | Complete cleaning required |
| Any single measurement above 500μm | Urgent local cleaning required |

To achieve these limits, it is recommended that:

- a visual inspection of the ventilation system be carried out at least once a week. All metal surfaces should be checked to ensure that there is no accumulation of grease or dirt and that there is no surface damage;
- cooker hoods and grease filters should be cleaned on a daily basis;
- baffle type self draining filters and collection drawers should be cleaned weekly as a minimum. The cleaning period for mesh filters should be at least twice a week;
- cleaning period for extract ductwork are used as follows:

| Grease loading | | Daily usages | Cleaning interval (months |
|---|---|---|---|
| *Heavy use* | *Heavy/continuous grease production* | *6 – 12 hours* | *3-6 months* |
| | | *12 -16 hours* | *2-3 months* |
| *Moderate use* | *Moderate grease production* | *6 – 12 hours* | *6-12 months* |
| | | *12 -16 hours* | *3-4 months* |
| *Light use* | *No significant grease production* | *6 – 12 hours* | *12 months* |
| | | *12 -16 hours* | *6 months* |

- periodic 'deep hygiene cleaning' be undertaken by a specialist contractor. All accessible main ductwork runs and branches, including fitted equipment should be inspected and cleaned. [Note: periodic will be defined by the use of equipment];
- all fans are maintained on a regular basis as recommended by the fan manufacturer; and
- ventilation grilles, where fitted have easily removable cores to facilitate cleaning.

**Recommendations for maintenance of odour control system:**

For a system employing fine filtration and carbon filtration;

- Change fine filters every two weeks
- Change carbon filters every 4 to 6 months

For a system employing ESP and other in line abatement systems:

- *Clean every 1-3 months*
- *Change carbon filters every 6 to 12 months*

### 5.1.3 Maintenance Activities

A range of cleaning techniques are available, and these are summarised in Table 25 and Table 26.

**Table 25: Examples of wet cleaning techniques**

| Generic Name | Method of Removing Deposit |
|---|---|
| Wet Vacuum | Suction |
| Chemical Clean | Softens or dissolves deposits |
| Hand Wash | Washing of internal surface using appropriate medium |
| Steam/High pressure | High pressure system water wash used to dislodge/ dissolve deposits |

**Table 26: Examples of dry cleaning techniques**

| Generic Name | Energy Source | Method of Removing Deposit |
|---|---|---|
| Air Whip/Skipper Ball | Compressed Air (Low Volume) | A rubber hose or plastic ball that under pressure agitates the wall of the ductwork. |
| Air Lance | Compressed Air (Low Volume) | Usually an air gun with a trigger that is able to direct compressed air locally. |
| Air Nozzle | Compressed Air (High Volume) | Usually a plastic or metal ball placed on the end of a flexible hose. Compressed air leaving small openings in the ball propels the hose forward inducing the nozzle to closely traverse the internal surface of the duct. |
| Hand Wipe | Manual | Wiping of the surface using a medium appropriate to the purpose. |
| Hand Scrape | Manual | Removing heavy deposits by hand scraping. |
| Hand Brushing | Manual | Brushing the surface using a brush appropriate to the purpose. |
| Hand Vacuum | Electricity/Manual | Suction |
| Mechanical Brushing | Compressed Air and/or Electricity | Brushing the surface of the ductwork using a mechanical action. |

| Generic Name | Energy Source | Method of Removing Deposit |
|---|---|---|
| Mechanical Brush and Air Technology Combined | Compressed Air/ Electricity | Brushing the surface of the ductwork using a mechanical action and compressed air. |

### 5.1.4 Monitoring Methods

Monitoring methods that may be used for assessing the level of debris accumulation are summarised in Table 27.

**Table 27*: Examples of monitoring methods that may be used for assessing the level of debris accumulation***

| Test Method | Reference | Description of Method |
|---|---|---|
| Deposit thickness test (DTT)<br>Dust Vacuum Test (VT)<br>Wet Film Thickness Test (WFTT) | US National Air Duct Cleaners Association NADCA ACR 2002 | HVCA "Good Practice Guide: Cleanliness of Ventilation Systems" |
| Indicative test | Measurement of grease deposit thickness on hard surfaces using a | |

***Figure 20: case study material***

| *Maintenance is a prerequisite for all grease, smoke and odour systems. Poor cleaning of clean control systems will lead to poor performance of equipment and may lead to failure within a short period of time.* | |
|---|---|
| 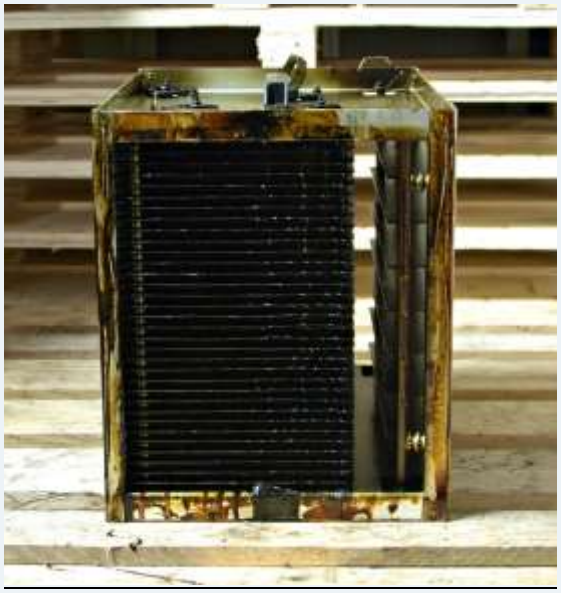 | *Electrostatic precipitator after period of high grease loading* |
|  | *Electrostatic precipitator after cleaning* |

*Grease accumulation at a moderately busy restaurant. The sump on this system is full and requires cleaning. Failure to manage the grease accumulation properly is likely to lead to grease passing through the separation step and in to the odour control element.*



Inspection of the duct work is likely to show the presence of staining around joints and seals which would be symptomatic of the grease loading being too high.

*Illustration of the benefit of cleaning ductwork. Cleaning removes the build up of debris that accumulates over time. The rate of accumulation depends on the grease/smoke loading,so duct cleaning requirement needs to set accordingly*



*Before cleaning (note the hatches present in the ductwork to allow access for cleaning purposes).*



*After cleaning*

# Acknowledgements

*EMAQ would like to thank*

- *David Collins (Purified Air Limited) and Tony Higgins (Enviroconsult Ltd)) for their assistance in reviewing and drafting text for updating this document.*
- *BESA for their technical support ensuring that this update takes account of industry best practice and for allowing figures from DW172 to be used in this document.*
- *those Local Environmental Health Officers and consultants who took part in the consultation exercise and provided useful comments on the amended document:*
    - *Tim Baker, Environmental Control Officer, London Borough of Newham*
    - *Laurence Caird, Air Quality Consultants*
    - *Neil Chaplin, Coventry City Council*
    - *David Duffy, Divisional Environmental Services, South Lanarkshire Council*
    - *Robin Fraser, Environmental Health Officer Highland Council*
    - *David Gould, Senior Environmental Health Officer, Blaby District Council*
    - *Chris Hodson, Preston City Council*
    - *Richard Knightley Environmental Protection Manager, Manchester City Council*
    - *Peter Lawson, Senior Environmental Health Officer Warwick District Council*
    - *Neil Martin, South Ribble Borough Council*
    - *Paul Neagle, Environmental Protection Manager, Dover District Council (on behalf of Kent Authorities)*
    - *Paul Outen, Air Quality Consultants*
    - *Mark Partridge, Environmental Control Officer, London Borough of Newham*
    - *Matthew Shirley, Environmental Protection Team Leader, Warwick District Council*
    - *Phil Tidridge, Environmental Health & Licensing, Winchester City Council*
    - *Mark Whitmore, Principal Officer Borough Council Kings Lynn and West Norfolk (on behalf of Norfolk Environmental Protection Group*
    - *Ben Walther, Senior Environmental Protection Officer, Cambridge City Council*
    - *John Wood, Principal Officer - Environmental Protection, Blackburn with Darwen BC*

# Appendices

# Appendix 1: Summary of Odour and Noise Problems Encountered by Local Authority Environmental Officers

*The results of the survey conducted for the 2004 document have not been reproduced. Additional example problems are included in Table 4.*

# Appendix 2: Information Required to Support Planning Applications for Commercial Kitchens

The annex contains guidance on the type of information that should be submitted for approval by the Local Authority before any ventilation plant is installed.

The aim of any ventilation/extraction is to ensure that no nuisance, disturbance or loss of amenity is caused by odour, fumes, food droplets or noise, to nearby properties. Additionally, the visual appearance of the flue may be important and the flue itself may require separate planning permission. Enquiries should be made to the Local Authority Planning Department regarding this matter.

A suitably qualified and experienced person with specialist knowledge of ventilation schemes should undertake the design and installation of a ventilation system. Designing and installing appropriate ventilation systems may involve considerable expense.

In circumstances where the end user of the premises is unknown, or where the specific type of food to be cooked is unknown, the installation should be designed to achieve the highest level of odour control in order to cater for a worst-case scenario.

There are many different types of odour abatement available (carbon filters, electrostatic precipitation, high dilution and high velocity extraction). Not all types are suitable for all cooking methods. In each case, grease filters must be installed.

Please note that any reference to minimum standards within this document is for guidance only and more stringent controls may be deemed appropriate.

To enable the Local Authority Planning Department to assess the suitability of a ventilation scheme the following information should be provided.

**1. Information on premises**

The following information should be supplied:

- the number of meals to be served per day;
- the method(s) of preparation and cooking;
- the types of meal served, e.g. fish and chips, Chinese food, Indian food, pizzas or Italian dishes, etc; and
- proposed hours of operation of the business and any ventilation plant.
- *A risk assessment (see Appendix 3) for the premises*

**2. Plans and drawings**

Provide a scaled plan showing the internal arrangement of the premises and the dimensions/location of the ventilation system. The plan must contain external elevations of the buildings showing the

- dimensions;
- route; and
- exhaust characteristics of the ductwork in relation to the building.

The location of **all** filters and the fan must be clearly marked. Where the location of a filter is shown the type must be clearly identified and cross-referenced to the detailed product specification.

**3. Pre-filters**

A copy of the manufacturer's product data sheet should be supplied clearly showing:

- manufacturer's name;
- filter name and product code;
- dimensions of the pre-filter; and
- nature of the filter media.

- manufacturer's recommendations on the frequency and type of maintenance of the pre-filter having regard to the conditions that it will be used under.

**4. Electrostatic precipitators (where proposed)**

A copy of the manufacturer's product data sheet should be supplied clearly showing:

- manufacturer's name;
- ESP name and product code;
- dimensions of the ESP; and
- flow rate rating.

Manufacturer's recommendation on the frequency and type of maintenance of the ESP having regard to the conditions that it will be used under.

**5. Carbon Filters (where proposed)**

The details and type of carbon filter units should be identified. A copy of the manufacturer's product data sheet should be supplied that clearly shows:

- manufacturer's name;
- filter name and product code;
- dimensions of the filter panel; and
- the total number of filter panels in the filter bed.

The following information should also be included:

- the nature of the carbon (including product type);
- the frequency of replacement of the carbon units having regard to the conditions that it will be used under. The assumptions to this calculation must be clearly stated, including the frequency and duration of use. The manufacturer should provide recommendations on the frequency and type of maintenance required;
- total volume of carbon expressed in cubic metres;
- total mass of carbon expressed in kilograms;
- total surface area of the panels exposed to the exhausted air; and
- dwell time of the gases in the filter compartment and the control setting at which this is achieved. The assumptions to this calculation must be clearly stated and should include the air change rate for the setting quoted.

**6. Odour counteractant or neutralising system (where proposed)**

The details and type of counteractant or neutralising system should be identified. A copy of the manufacturer's product data sheet should be supplied that clearly shows:

- manufacturer's name;
- name of delivery system and product code;
- counteractant or neutralising chemical to be used;
- COSHH data sheets for chemical to be used; and
- anticipated counteractant or neutralising delivery rate.

***7. UV-C system (where proposed)***

*A copy of the manufacturer's product data sheet should be supplied clearly showing:*

- *manufacturer's name;*
- *UV-C name and product code;*
- *dimensions of the UV-c unit;*

- *anticipated level of ozone being generated;*
- *anticipated residence time; and*
- *anticipated level of residual ozone likely at stack exit;*

*Manufacturer's recommendation on the frequency and type of maintenance of the UV-C having regard to the conditions that it will be used under.*

**8. Odour counteractant or neutralising system (where proposed)**

The details and type of counteractant or neutralising system should be identified. A copy of the manufacturer's product data sheet should be supplied that clearly shows:

- manufacturer's name;
- name of delivery system and product code;
- counteractant or neutralising chemical to be used;
- COSHH data sheets for chemical to be used; and
- anticipated counteractant or neutralising delivery rate.

**9. Cooker hood**

The following information on the characteristics of the cooker hood should be supplied that clearly shows the:

- length that the cooker hood overhangs the appliances;
- face velocity at the cooker hood, expressed in metres per second; and
- dimensions of the opening of the cooker hood.

**10. System Operation**

In addition to the specification of the components the following must be provided about the system:

- extract rate (expressed as $m^3/s$) at the proposed rate of extract;
- dwell time of the gases in the carbon filtration zone;
- volume of the kitchen; and
- efflux velocity

Note: The system performance is dependent upon the extract rate of the air. Where the rate can be adjusted by the use of dampers or a variable speed fan, then the conditions under which the extract rate can be achieved must be described.

**11. Flue Design**

The height and velocity of the final discharge are the two important factors. Generally, the greater the flue height, the better the dispersion and dilution of odours.

The discharge of air should be at a minimum height of 1m above the roof ridge, especially if there are buildings nearby that may affect odour dispersion and dilution.

Where this is not possible (e.g. because of ownership or structural constraints), additional techniques will be required in order to reduce odours, such as an increase in efflux velocity and additional filters, etc.

The final discharge should be vertically upwards, unimpeded by flue terminals. The number of bends in the ducting should be minimised and the ducting should have a smooth internal surface.

**12. Noise**

Data on the noise produced by the system as a whole should be provided including:

- sound power levels or sound pressure levels at given distances (the assumptions to this calculation must be clearly stated);
- an octave band analysis of the noise produced by the system should also be provided, where possible; and

- hours of operation of the ventilation system (where this differs from the hours of opening).
- *If the system produces internal sound levels above 70dB at the workstation, a workplace noise assessment should be conducted to ensure that compliance with occupational noise limits is met*.

**13. Maintenance**

A schedule of maintenance must be provided including details for:

- cleaning of washable grease filters;
- frequency of inspection and replacement of all filters (grease filters, pre-filters and carbon filters where proposed);
- inspection and servicing of fans; and
- if schedule is not based on manufacturer's instructions include the reasons why.

**14. Additional notes for guidance**

The air inlets must not permit pests to enter the kitchen. Fly screens are an example of how this can be achieved.

Sufficient air must be permitted into the premises to replace air extracted. The method for supplying this make-up air should be detailed. The route of the air into the kitchen must not result in its contamination, for example passage through a toilet. Separate provision must be made for ventilation of a toilet.

There must be sufficient access points to permit adequate cleaning of all the ductwork.

# Appendix 3: Risk Assessment for Odour

Odour control must be designed to prevent odour nuisance in a given situation. The following score methodology is suggested as a means of determining odour control requirements using a simple risk assessment approach. The odour control requirements considered here are consistent with the performance requirements listed in this report.

| Impact Risk | Odour Control Requirement | Significance Score* |
|---|---|---|
| Low to Medium | Low level odour control | Less than 20 |
| High | High level odour control | 20 to 35 |
| Very high | Very high level odour control | more than 35 |

* based on the sum of contributions from dispersion, proximity of receptors, size of kitchen and cooking type:

| Criteria | Score | Score | Details |
|---|---|---|---|
| Dispersion | Very poor | 20 | Low level discharge, discharge into courtyard or restriction on stack. |
| | Poor | 15 | Not low level but below eaves, or discharge at below 10 m/s. |
| | Moderate | 10 | Discharging 1m above eaves at 10 -15 m/s. |
| | Good | 5 | Discharging 1m above ridge at 15 m/s. |
| Proximity of receptors | Close | 10 | Closest sensitive receptor less than 20m from kitchen discharge. |
| | Medium | 5 | Closest sensitive receptor between 20 and 100m from kitchen discharge. |
| | Far | 1 | Closest sensitive receptor more than 100m from kitchen discharge[1]. |
| Size of kitchen | Large | 5 | More than 100 covers or large sized take away. |
| | Medium | 3 | Between 30 and 100 covers or medium sized take away. |
| | Small | 1 | Less than 30 covers or small take away[1]. |
| Cooking type (odour and grease loading) | Very high | 10 | Pub (high level of fried food), fried chicken, burgers or fish & chips. *Turkish, Middle Eastern or any premises cooking with solid fuel* |
| | High | 7 | Vietnamese, Thai, Indian, *Japanese*, *Chinese, steakhouse* |
| | Medium | 4 | Cantonese, *Italian, French, Pizza (gas fired),* |
| | Low | 1 | Most pubs (*no fried food, mainly reheating and sandwiches etc*), *Tea rooms*[1] |

**Note 1: A planner may take a pragmatic view when assessing whether certain low risk kitchens require any odour abatement to be fitted. In reaching this decision the Planner may consider the nature of the food being cooked and/or the size of kitchen and/or its location.**

**Example application of scoring procedure for four different cooking situations**

| Example | Dispersion | Proximity of receptors | Size of Kitchen | Cooking Type | Total Score |
|---|---|---|---|---|---|
| 1. Small Indian restaurant | 20 | 10 | 1 | 7 | 38 |
| 2. Pub | 5 | 5 | 5 | 4 | 19 |
| 3. Medium sized French restaurant | 15 | 10 | 3 | 4 | 33 |
| 4. Large burger restaurant | 10 | 10 | 5 | 10 | 35 |

Example 1 Represents a small Indian restaurant with the kitchen ventilation extract discharging into a small court yard.

Example 2 Represents a traditional pub cooking a range of food types with the kitchen ventilation extract discharging at roof ridge. The pub is located in a rural location with the closest receptors 25 m away.

Example 3 Represents a medium sized French restaurant. The restaurant occupies the ground floor of two story building (adjacent buildings are taller). The kitchen extract discharges at roof eaves.

Example 4 Represents a large burger restaurant. The restaurant occupies a building within 20m of residential properties. The kitchen extract discharges at roof eaves.

Examples 1 and 4 are locations where the risk of problems arising due to these types of cooking activity are very high. In both instances, improving dispersion (e.g. to 1 m above roof ridge) will reduce the risk ranking. Based on this assessment approach the emissions from these restaurants will need a very high level of odour control to prevent nuisance. The level of odour control requirement is reduced with improvement in stack dispersion.

Example 2 is a location where the risk of problem occurring due to this type of cooking activity is low to medium. Based on this assessment approach the emissions from these restaurants will need a low to medium level of odour control to prevent nuisance.

Example 3 is a location where the risk of problems occurring due to this type of cooking activity is high. Based on this assessment approach the emissions from the restaurant will need a high level of odour control to prevent nuisance. The level of odour control requirement is reduced with improvement in stack dispersion.

# Appendix 4: Factors to take into account in noise assessment

Two fundamental categories of noise source are of relevance. The first is the noise produced by the fan, which is a function of the type of fan (axial, centrifugal, mixed flow, etc), the rate of the airflow and the pressure drop. For these calculations the octave band sound power from the fan is required. This can normally be obtained from the manufacturer.

The second category of noise is generated by turbulence as the air passes within the ducts or through the exit grille or louvre. In this case the amount of noise is determined by the design of duct, grille or louvre, the pressure drop across terminations, the velocity of the air (this can be variable across the duct, grille or louvre) and the area of the duct or opening. The problem with this form of noise, especially at terminations, is that in most situations it can only be controlled at its source. For example, at the feature that is generating the noise as there is no further length of duct in which to install noise control equipment.

In some situations, a third source may need to be considered. This is where noise generated within the building breaks into the ductwork and is radiated from the outlet. The area of the duct walls, the acoustic properties of the duct walls and the area of any inlets determine the amount of break-in noise. Once this noise has broken into the ducts it can be treated as if it were an additional component of the fan noise. However, the nature of this additional noise is such that it usually contains a relatively high level of low frequency sound which can be difficult to attenuate.

The attenuation of fan noise (and break-in noise) provided by the ductwork is determined by the length of the ducts, the presence of any bends, changes in cross-section, the presence of any plenum chambers and termination effects (including sound-attenuating louvres if present and the attenuation provided by any change in cross-section). A balance has to be struck between the acoustic benefit of bends and louvres etc and the pressure drop that these create, possibly requiring a larger fan.

The sound energy components arising from fan noise, turbulence within the duct and at outlets, and from noise break-in, combine to produce an acoustic source at the outlet. The energy will then propagate away from the outlet in a manner determined by the nature and geometry of surrounding buildings and terrain. The nature, temporal characteristic and level of the resultant sound that reaches the ears of people in the vicinity (usually quantified by considering the noise at façades), and its level relative to the background noise, all contribute to its potential to cause disturbance and complaint. These factors should be taken into account at the planning stage as a matter of course. They form the basis of BS 4142 “Rating industrial noise affecting mixed residential and industrial areas” which will often be used by a Local Authority as support to the issue of a Noise Abatement Notice under the Environmental Protection Act.

When mitigation is required it can be provided in a variety of ways. For example, if the problem is grille/louvre noise then alternative designs or relocation of the outlet are usually the only available solutions. However, with fan noise many of the basic parameters can be altered to achieve a reduction in the sound pressure level. These may include the selection of a quieter fan or adding an additional attenuator close to the fan.

Although there will be exceptions it is worth noting that it is usually most effective to control the noise at source, for example by using quiet fans and grilles/louvres. The next most effective form of control is to increase the attenuation in the propagation path, close to the source wherever possible (plenum chambers, bends, branches and purpose-built attenuators). The least effective approach is likely to be relocation of the outlet.

The process that should be followed in order to ensure efficient management of environmental noise when planning new ventilation systems or designing retro-fitted mitigation, for example when the Local Authority has identified that a nuisance exists, is shown in Figure A4.1.

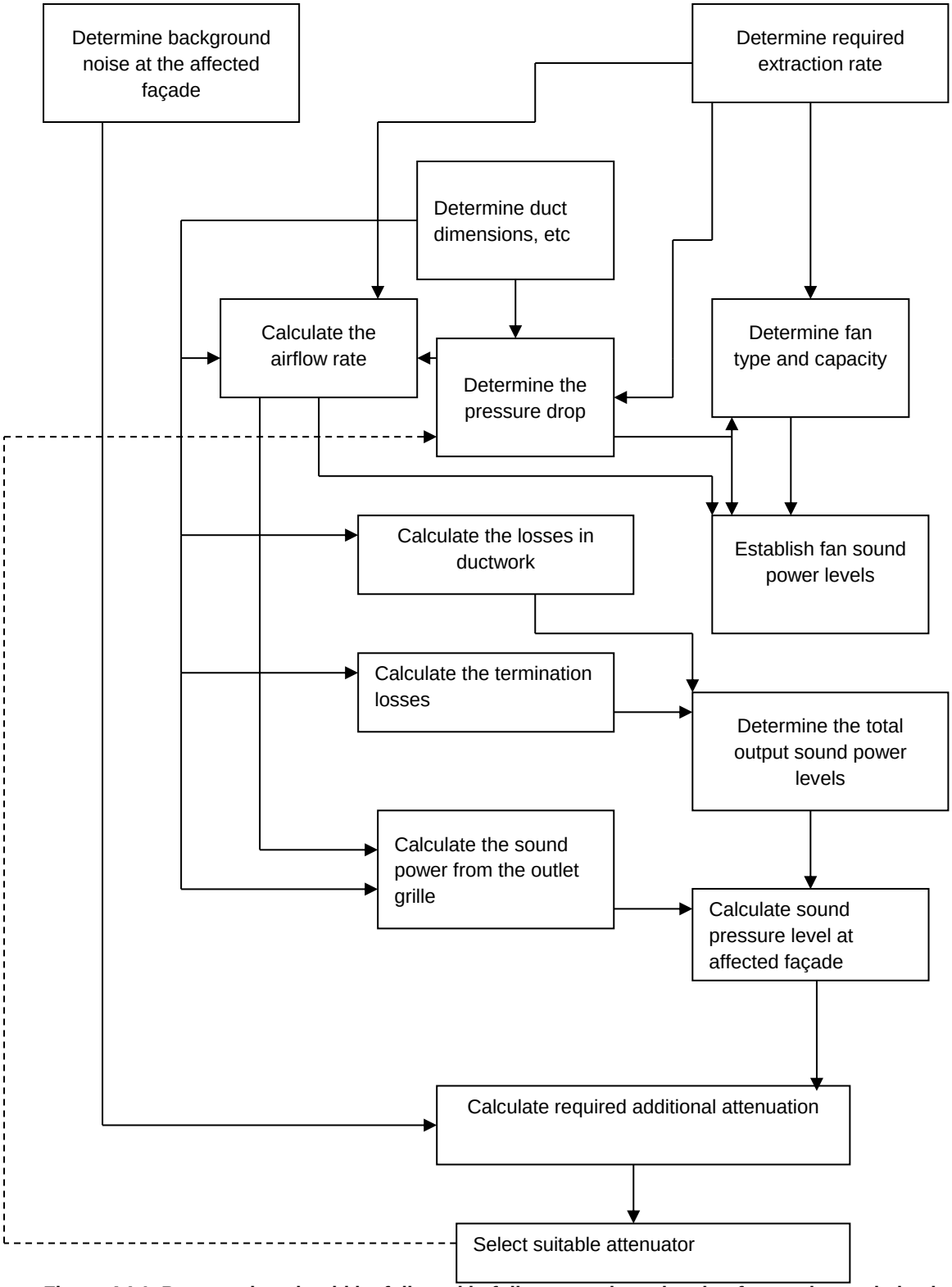


**Figure A4.1. Process that should be followed in full or part when planning for a noise-optimised ventilation system.**