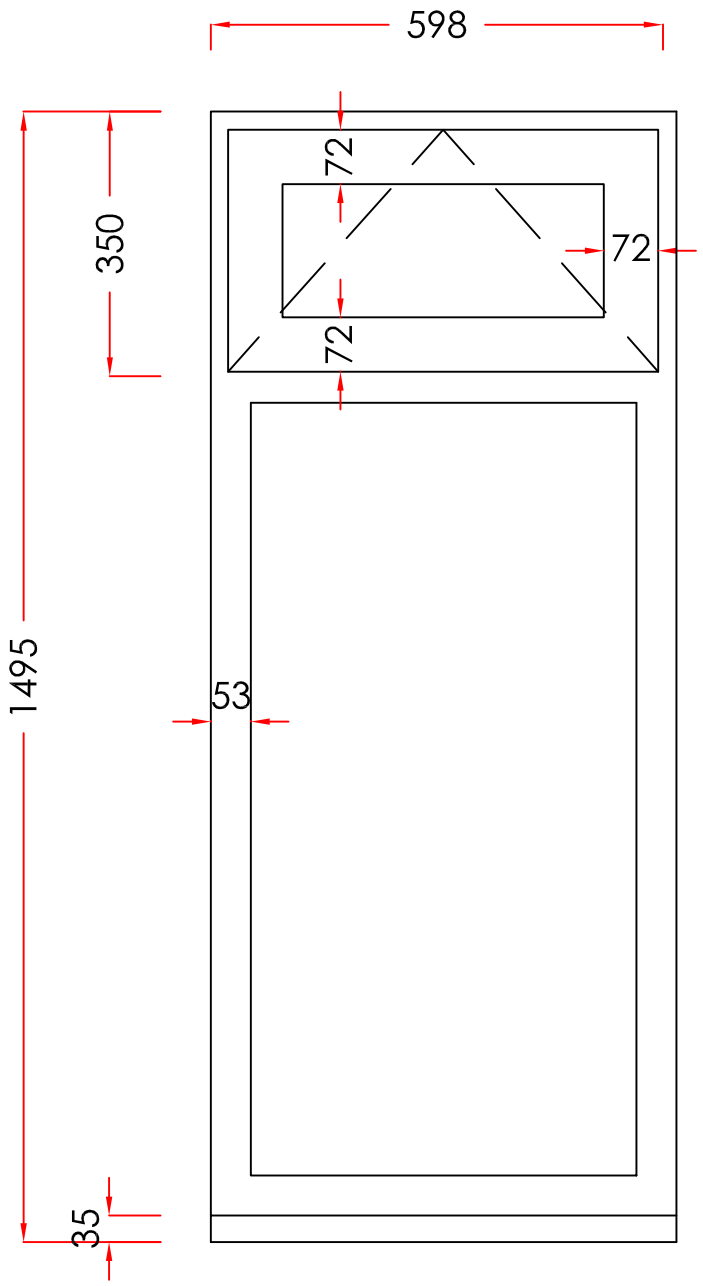

7. LOUNGE

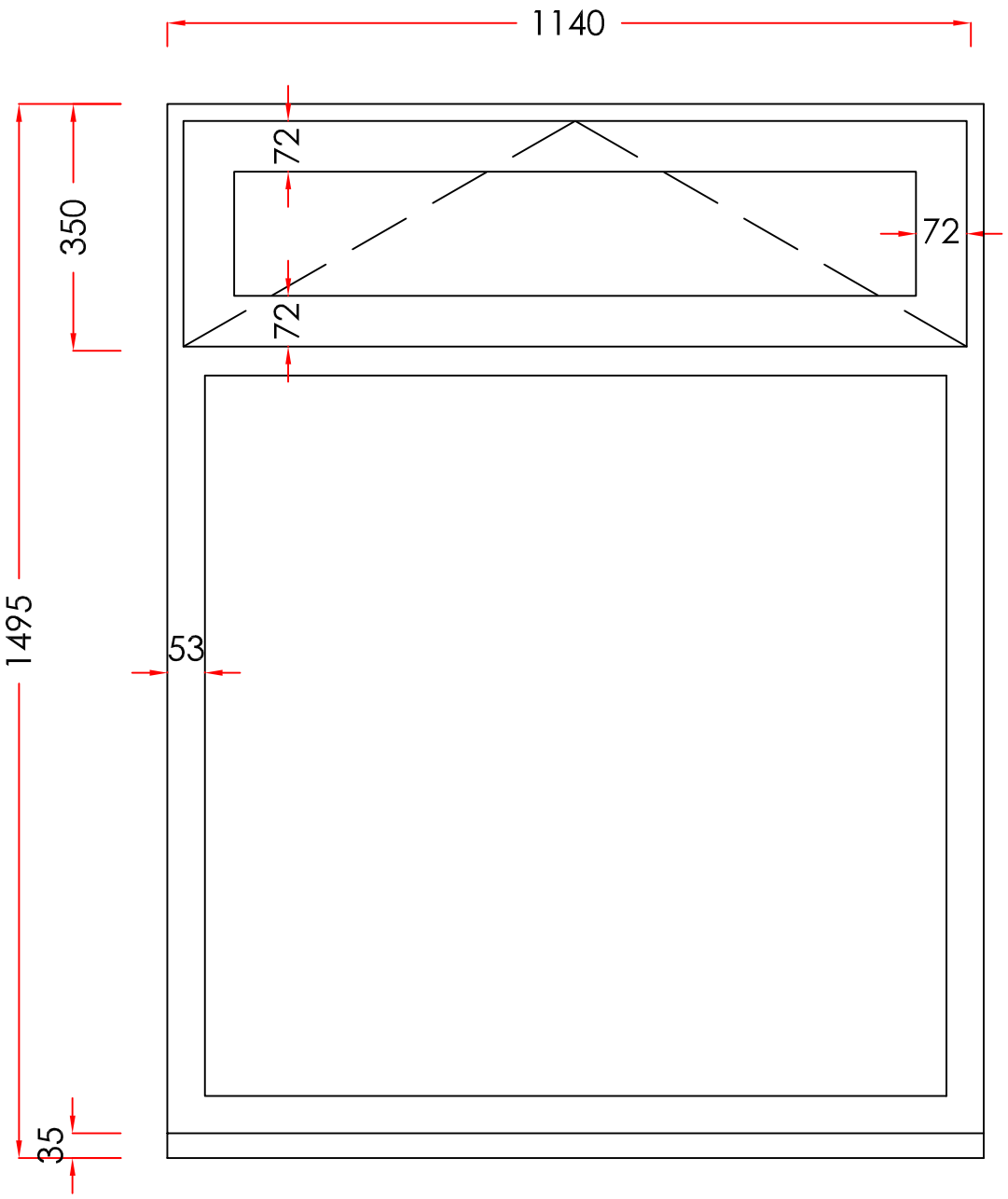

8. LOUNGE

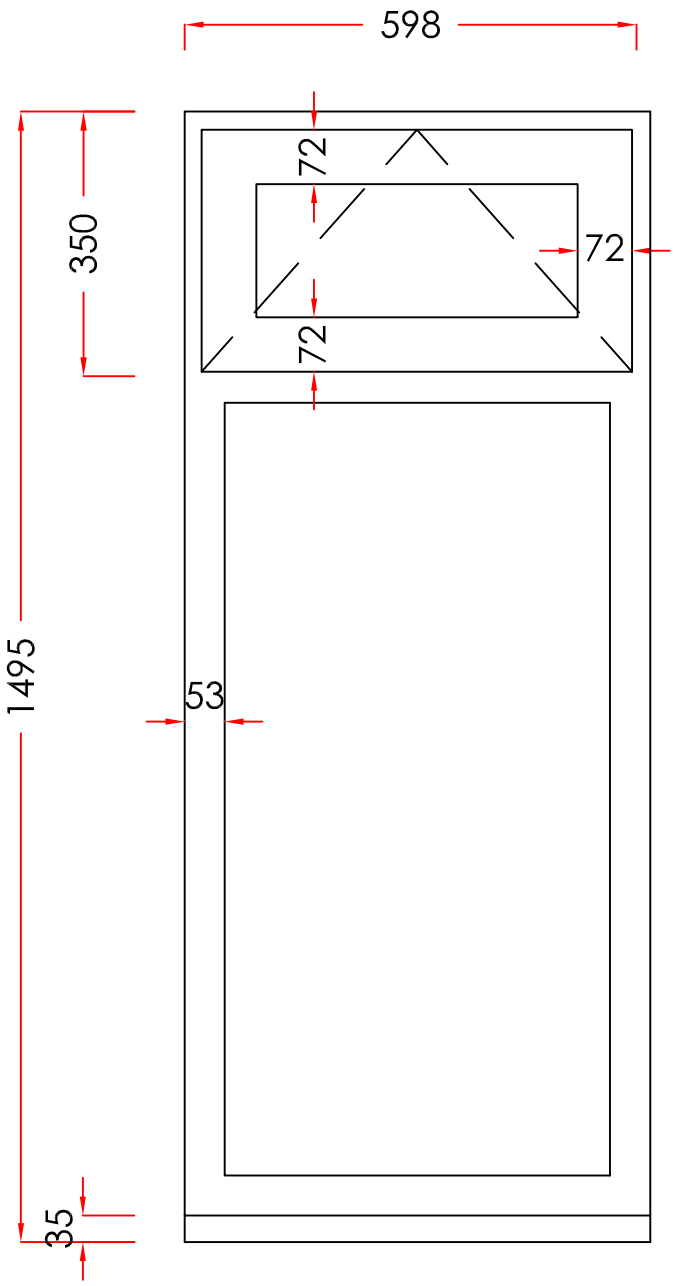

9. LOUNGE

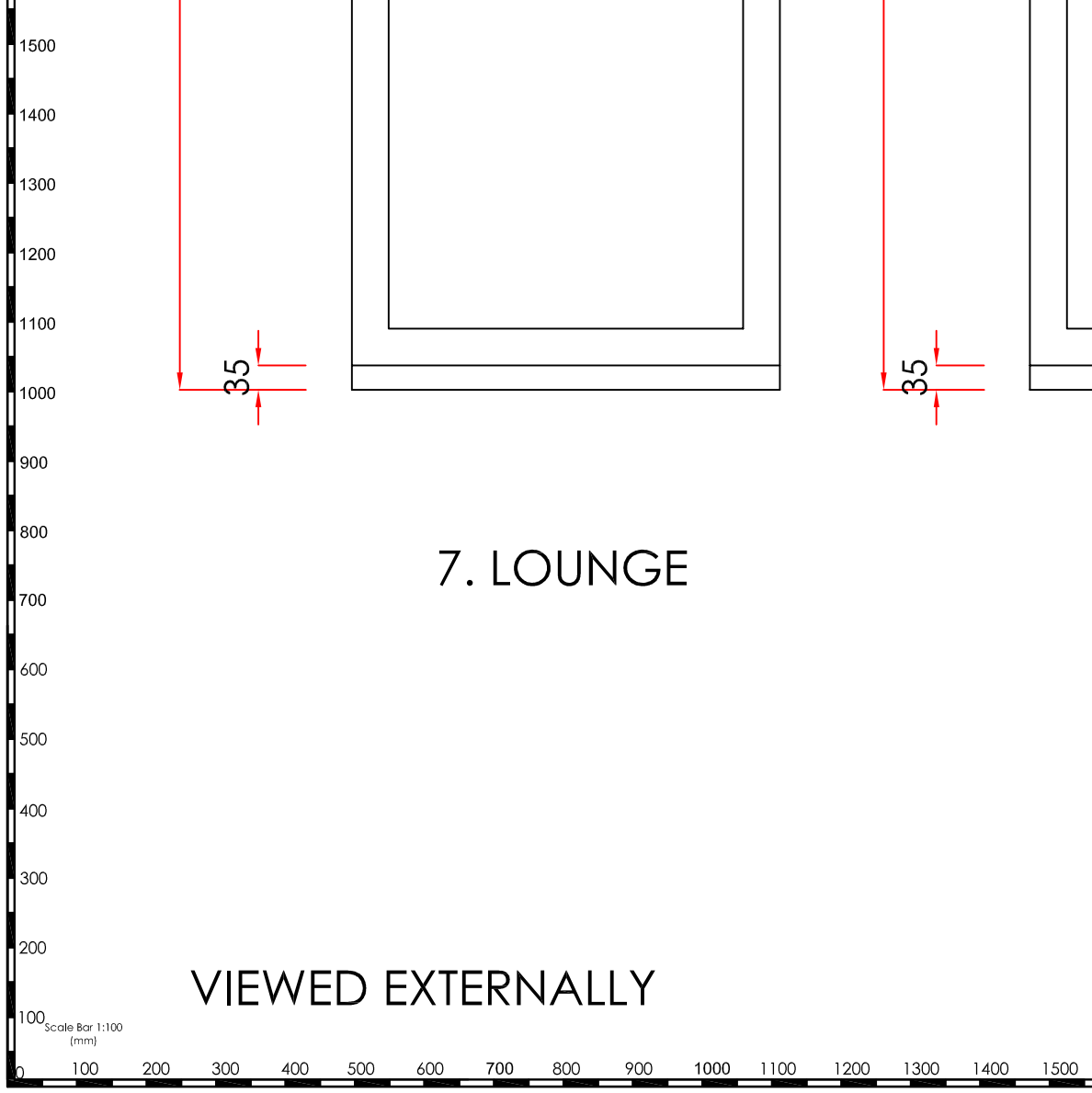

VIEWED EXTERNALLY

Scale - 1:10
(Produced on A3 Paper)

Sheet 3 Of 3

Drawers Initials.

AA

CONTRACT No.: 01680559 **date:** 16/10/09

PROPOSED: PROPOSED WINDOW REPLACEMENT

AT: (INSTALLATION ADDRESS)
FLAT 1, KATHERINES LODGE
PENHILL ROAD
LANCING
WEST SUSSEX, BN15 8HB

FOR:..... MR & MRS SMITH

Anglian Home Improvements
CONSERVATORIES DIVISION
TELEPHONE: 0845 437 3600
FACSIMILE: 01603 480101