Form Ref. No. 549167

ADUR DISTRICT COUNCIL

[redacted]

Application For Planning Permission

TOWN AND COUNTRY PLANNING ACT, 1990

4 copies of this form required, together with plans and appropriate fee.
All measurements are to be given in metric.
If site relates to Lancing or Sompting, please submit 5 copies.

FOR OFFICIAL USE ONLY
Appl. No A/0/2007
Date Received 25 JUL 2007
Fee 265
Rem. List

Applicant's Details

Title	
Forenames	
Surname or Company/ Organisation	Vodafone Ltd
Telephone	
Email	

Address	Vodafone House
	The Connection
	Newbury
	Berkshire
Postcode	RG14 2FN

Do you have an agent? Yes

Agent's Details

Title	Mr
Forenames	Gregory
Surname	Dix
Telephone	01202 856 977
Email Address	gdix@savills.com

Address	Savills
	Wessex House
	Wimborne
	Dorset
Postcode	BH21 1PB

Application Type

(a) Full planning permission (including changes of use) ✓

(b) Outline planning permission

If 'Yes', state those matters to which this application relates (tick where appropriate)

- (i) Layout ☐
- (ii) Scale ☐
- (iii) External Appearance ☐
- (iv) The means of access ☐
- (v) Landscaping of the site ☐

(c) Renewal of a temporary permission

If 'Yes', state the Date

and Permission Application

and the Condition Number

(d) Permission for retention of building or continuance of use without complying with a condition imposed on a planning permission

If 'Yes', state the Date

and Permission Application

and the Condition Number

Use of Land

Particulars of **Use** of Building or Land: Please State

Present use: Telecommunciation base station

If vacant, the last use:

Additional Information

(a) Is the application for industrial, office warehousing, storage, shopping, commercial purposes or places of public assembly? Yes

(b) Is the application for the winning or working of minerals? No

(c) Is the application for an agricultural dwelling or building? No

(d) Does the proposed development involve the demolition of any residential units? No

If 'Yes', how many units? Please indicate their position on plans

(e) Does the proposed development involve the felling of any trees? No If 'Yes', indicate their position on plans

(f) Does the proposed development involve any public right of way within the site? No If 'Yes', indicate their position on plans

(g) Does the proposed development involve demolition or alteration of a building or Special Architectural or Historic interest or demolition within a Conservation Area? No

If 'Yes', a separate application for **Listed Building Consent** or **Conservation Area Consent** may be necessary

(h) (i) How will surface water be disposed of? runoff

(ii) How will foul sewage be disposed of? na (e.g. mains, cesspit, etc.)

(i) Is there to be any 'furniture' placed on the street/highway? No

Process Description

Additional information required in respect of applications for Industrial, Office, Warehousing, Storage, Shopping, Rest and Nursing Homes, Commercial Purposes or Places of Public Assembly.

In the case of industrial development, give a description of the processes to be carried on and of the end products, and the type of plant or machinery to be installed. Please relate your answer to the 'Floor Areas & Uses' section.

Telecommunication Base Station

Details of Proposal

Is the proposal related to an existing use on or near the site? Yes

If 'Yes', please explain the relationship: extended telecommunication base station

Premises Details

In the case of restaurants, hotels, public houses, theatres, cinemas, meeting halls, Rest and Nursing homes, etc., please specify:

Type of Business

Public floor space (Total)

Seating capacity

Bar floor area (sq.m)

Single bedrooms

Double bedrooms

Parking & Traffic

What provisions have been made for parking, loading and unloading of vehicles within the curtilage on the site?

na

State number of car spaces

and Lorry spaces

What is the estimated vehicular traffic flow to the site during a normal working day?
Please include all vehicles

Separately specify those used by employees driving to work:

Waste

What is the nature of disposal of any trade effluents or trade refuse?

na

What is the volume of any trade effluents or trade refuse?

na

and the proposed means of disposal of any trade effluents or trade refuse?

na

Will the proposed use involve the use or storage of any hazardous substances?

No

If 'Yes', please indicate

Certificate B

I certify that:

I have given the requisite notice to everyone else who, on the day 21 days before the date of the accompanying application were owners of any part of the land to which the application relates, as listed below

Owner's Name	Address at which notice was served	Date on which notice was served
	C/O Mr B Noonan	23/07/2007
	Old Barn Way	
Southwick Football Club	Southwick	
	Brighton	
	BN42 4NT	

None of the land to which the application relates is, or is part of, an agricultural holding.

OR

[ ] given the requisite notice to every person other than [ ] self who, on the day 21 days before the date of the [ ] was a tenant of an agricultural holding on all or part of the land to which the [ ] relates, as follows:

Tenant's Name	Address at which notice was served	Date on which notice was served

Signed: [redacted] Date: 23/07/2007.

(On behalf of): VODAFONE LTD

vodafone

General Background Info

VODAFONE DIGITAL (GSM) NETWORK – "2G"

The Vodafone digital network was developed in the early 1990s. This digital technology is often referred to as GSM (Global System for Mobile Communications) which is the common European operating standard, enabling phones to inter-connect to other networks throughout Europe and Internationally. Vodafone's digital network is designed to enable domestic and local businesses to access mobile telecommunications at an affordable price.

PLANNING SION
PLAN No. Arc1045210
DATE 25 JUL 2007

RADIO SYSTEM PLANNING

How the cellular radio network works

The building blocks of the mobile telecommunications network are called radio base stations which transmit and receive calls to and from mobile phones using radio waves, similar to those used in domestic television and radio equipment. Radio base stations are often associated with free-standing masts, however they can be located on, or even inside, existing buildings and other structures. Approximately 60 per cent of Vodafone sites are located on existing structures or buildings. Vodafone uses "radio frequencies" to transmit and receive calls at 900 MHz or 1800 MHz. 3G uses frequencies within the 2100 MHz range.

How radio signals are transmitted

The radio signals are transmitted from antennas which are part of the radio base station and cover an area known as a "cell", hence the term "cellular phone". The size of the cell is dependent on a number of factors including: the height at which the radio base station is positioned; the topography of the surrounding landscape; anticipated demand; and the population density in the area.

Radio signal transmission from a radio base station can be likened to water being distributed from a garden sprinkler. The area immediately adjacent to the sprinkler remains almost "dry". However the grass gets progressively wetter moving further away from the sprinkler, until a wettest point is reached. Then the further away from the centre, the ground becomes progressively drier. Radio base stations provide network services in the same manner. The area immediately beneath the antennas receives limited or, occasionally, no signal. Moving further away, the signal steadily improves until it reaches an optimum level and then gets progressively weaker.

In order to use mobile phones whenever and wherever we are, a network of radio base stations is required to maintain a continuous signal or 'network service' across a geographical area. The network is designed so that the cells from each radio base station slightly overlap. Travelling even a short distance may take us through a number of cell areas. Mobile phones are designed to monitor the strength of signal from surrounding radio base stations and automatically select the clearest signal, which often comes from the nearest site. As you approach the edge of the cell area, the phone will automatically select the adjoining radio base station, to provide a continuous service. This process is known as 'call handover'.

Factors affecting network services

The siting of a radio base station is largelyd ependent on the characteristics of the radio signals which they transmit. The signals are similar to noise or heat in that physical features such as buildings or landscape can obstruct them. In open rural areas one base station can typically cover several kilometres in radius. However in urban areas where surrounding buildings will obstruct the signal, this range can be reduced to as little as a few hundred metres.

Network Capacity

Radio base station sites can only receive and transmit a limited number of simultaneous calls to and from mobile phones. In areas where the use of phones is particularly high, such as major towns or cities, many sites will reach the maximum number of calls they can process. When a customer attempts to make a call in an area where the network has reached its full capacity, the 'network busy' message is displayed on their mobile phone. In order to continue to meet customer demand and improve the quality of services in these areas, there is a need to increase the capacity of the network to allow more calls to be made.

options are then returned to our radio engineers fora computerm odelling assessment, taking into account the ground height, potential available antenna height and surrounding obstructions.

5. Discussions are offered to the local planning authority to consider local policies and any protected areas and to agree additional public consultation if required. These discussions are used to identify a 'preferred' option.

6. A plan for local consultation is drawn up, and where appropriate, a consultation exercise is undertaken with the local community. The issues associated with the proposal are discussed to obtain their comments on the options under consideration. After this review the final preferred option is selected.

7. Finally a site survey provides a full structural analysis of site including identifying power routes and how the site will be linked into the network. Terms with the landlord are then finalised, detailed plans prepared and the application submitted.

Details of Vodafone's site selection procedures are as set out in our Environmental and Planning Handbook which is used by all personnel involved in the acquisition process. Vodafone are committed to ensuring the number and visual impact of any additional sites is minimised. The company will continue to develop and utilise sympathetic and innovative design solutions.

PPG 8 – TELECOMMUNICATIONS (www.planning.odpm.gov.uk/ppg/ppg8/index.htm)

PPG 8 seeks to facilitate the growth of new and existing telecommunications systems whilst keeping the environmental impact to a minimum. It encourages local planning authorities to respond positively to telecommunications development proposals, whilst taking into account other planning policy.

PPG 8 states that fast, reliable and cost-effective communications can attract business to an area. PPG 8 states that good communications can enrich life at home and offer new choices in education, entertainment, shopping and banking.

Need for development

PPG 8 advises that operators are required to provide a high quality service, which includes the need to meet customer demand. It states that systems are demand-led, therefore operators are continually expanding their networks to accommodate customer requirements of service and quality. Vodafone has a legal obligation in its licences to build a 3G network covering 80% of the population by 2007.

PPG 8 advises that local planning authorities should have regard to any technical constraints on the location and proposed development. Material considerations include the significance of the proposed development as part of a national network.

Siting and design

PPG8 identifies that "protection from visual intrusion and the implications for subsequent network development will be important considerations in determining applications... Masts and antennas often require a particular operating height, which allows signals to clear trees and urban clutter. Telecommunications development may therefore need particular locations in order to work effectively." (Paragraph 64 – Appendix).

PPG 8 states "Siting and design concerns may centre particularly on the type of mast and its impact... Its height, ancillary development and the scope for landscaping and screening will also be important considerations. But many of the antennas have special siting needs because they have a limited range or require line-of-sight. Authorities should take account of these needs." (Paragraph 74, Appendix)

In seeking to arrive at the best solution for an individual site, local planning authorities and operators should consider the use of sympathetic design to minimise the impact of development on the environment. It advises that depending upon their location, an appropriately designed single operator mast may have a smaller environmental impact than a shared one.

vodafone

Our ref: 977

23rd July 2007

Savills
Wessex House
Wimborne
Dorset
BH21 1PB

FOR THE ATTENTION OF GREGORY DIX

PLANNIN	...NCIL ...ON
PLAN No.	Ardaus2107
DATE RECEIVED	25 JUL 2007

Dear Sir

CLARIFICATION OF THE DECLARATION OF ICNIRP COMPLIANCE ISSUED AS PART OF THE PLANNING APPLICATION ATTACHED FOR SITE CS 977: AT SOUTHWICK FC, OLD BARN WAY, SOUTHWICK, WEST SUSSEX, BN42 4BF

I refer to the Declaration of Conformity with ICNIRP Public Exposure Guidelines ("ICNIRP Declaration"), sent with this application in relation to the proposed telecommunications installation as detailed above.

The "ICNIRP Declaration" certifies that the site is designed to be in full compliance with the requirements of the radio frequency (RF) guidelines of the International Commission on Non-Ionizing Radiation (ICNIRP) for public exposure as expressed in the EU Council recommendation of July 1999.

The ICNIRP declaration produced by Vodafone Ltd takes into account the cumulative effect of the emissions from the proposed Vodafone installation and all radio base stations present at, or near, the proposed location.

The radio emission compliance calculation is based upon the maximum possible cumulative values. If you have any further enquiries concerning the "ICNIRP Declaration" certificate or the certification process please contact Vodafone's EMF Advisory Unit on 08454 450 450.

Yours sincerely

[redacted] [redacted]

Caroline Wilkes

Vodafone Limited
Vodafone House, The Connection, Newbury, Berkshire RG14 2FN, England
Telephone: +44 (0)1635 33251, Facsimile: +44 (0)1635 234858

Registered Office: Vodafone House, The Connection, Newbury, Berkshire RG14 2FN, England. Registered in England No. 1471587 {{ FILENAME }}

vodafone

Our ref: 977

Declaration of Conformity with ICNIRP Public Exposure Guidelines
("ICNIRP Declaration")

Vodafone Ltd
Vodafone House
The Connection
Newbury
Berks
RG14 2FN

Declares that the proposed equipment and installation as detailed in the attached planning/GPDO application at:

Southwick FC
Old Barn Way
Southwick
West Sussex
BN42 4BF

ADUR DIS... ...UNCIL
PLANNING ...SION

PLAN No.	Ardc045267
DATE	25 JUL 2007

Eastings: 524990, Northings: 105314

is designed to be in full compliance with the requirements of the radio frequency (RF) public exposure guidelines of the International Commission on Non-Ionizing Radiation (ICNIRP), as expressed in the EU Council recommendation of 12 July 1999 * "on the limitation of exposure of the general public to electromagnetic fields (0 Hz to 300 GHz)".

* Reference: 1999/519/E

Date:	23rd July 2007
Signed:	[redacted]
Name:	Caroline Wilkes
Position:	Incoming Site Share Specialist

23rd July 2007
070723 LetterBN NOT 1 DOC 977.doc

Mr B Noonan
Southwick Football Club
Old Barn Way
Southwick
BN42 4BF

Gregory Dix
E: gdix@savills.com
DL: +44 (0) 1202 856 977
F: +44 (0) 1202 856 801

Wessex House
Priors Walk
East Borough
Wimborne BH21 1PB
T: +44 (0) 1202 856 800
savills.com

PLANNING
PLAN No. Andover/07
DATE RECEIVED 25 JUL 2007

Dear Mr Noonan,

PROPOSED SITE SHARE BY T-MOBILE AT EXISTING VODAFONE SITE REF 977

Further to our previous discussions I have now submitted a planning application in regards to the proposed site share by T-mobile at the Vodafone base station and as such please see enclosed a Notice 1.

I also enclose a set of plans again in regards to the proposal and would be grateful if you would write back confirming your approval to the proposal along with details of your solicitor in order that we can get a draft agreement drawn up, ahead of a hopeful grant of planning permission.

Yours sincerely

[redacted]

Gregory Dix
Associate Director

For and on behalf of Vodafone Ltd

Savills (L&P) Limited. Chartered Surveyors. A subsidiary of Savills plc. Registered in England No. 2605138.
Registered office: 20 Grosvenor Hill, London W1K 3HQ

Form Ref. No. 549150

ADUR
DISTRICT COUNCIL

[redacted]

Notice Of Application For Planning Permission
NOTICE NO.1

Town and Country Planning (General Development Procedure) Order 1995

This form is to give notice of Application of Planning Permission, to be published in a newspaper or to be served on an owner or a tenant

Proposed development at

Address	Southwick Football Club
	Old Barn Way
	Southwick
	BRIGHTON
Postcode	BN42 4NT

ADUR ... COUNCIL
PLANNING ... SION
PLAN No. Adc/ausz/07
DATE RECEIVED 25 JUL 2007

Is the land to which the application / appeal relates to part of, or wholly, an agricultural holding? No

give notice that

Title	
Forenames	
Surname	Vodafone Ltd

is applying to the ADUR DISTRICT COUNCIL for planning permission to (description of the proposed development)

Installation of new 17.5m monopole with antenna and compound extension (see attached supplmentary information template for full description of proposed development)

Anyone owner of the land or tenant who wishes to make representations about this application should write to the Council at: Development Control, Civic Centre, Ham Road, Shoreham-by-Sea, West Sussex BN43 6PR

by 12/08/2007

"owner" means a person having a freehold interest or a leasehold interest the unexpired term of which is not less than 7 years, or, in the case of development consisting of the winning or working of minerals, a person entitled to an interest in a mineral in the land (other than oil, gas, coal, gold or silver).

"tenant" means a tenant of an agricultural holding any part of which is comprised in the land.

Signed: [redacted] Date: 23/7/2007

On behalf of: VODAFONE LTD

Statement of owners' rights:
The grant of planning permission does not affect owners' rights to retain or dispose of their property, unless there is some provision to the contrary in an agreement or in a lease.

Statement of agricultural tenants' rights:
The grant of planning permission for non-agricultural development may affect agricultural tenants' security of tenure.

SITE SPECIFIC SUPPLEMENTARY INFORMATION

1. Site Details

Site Name:	Southwick Football Club	Site Address:	Old Barn Way Southwick West Sussex BN42 4BF
NGR:	525000,105400		
Site Ref Number:	977	Site Type:[1]	macro

2. Pre Application Check List

Site Selection

Was an LPA mast register used to check for suitable sites by the operator or the LPA?	Yes	
If no explain why: NA		
Was the industry site database checked for suitable sites by the operator:	Yes	
If no explain why: NA		

ADUR DIS... COUNCIL
PLANNING ...SION
PLAN No. Ax/0452/07
DATE 25 JUL 2007

Annual roll out consultation with LPA

Date of last annual rollout information/submission:	October 2006
Name of Contact:	Chief Planning Officer
Summary of outcome/Main issues raised:	None

Pre-application consultation with LPA

Date of written offer of pre-application consultation:	18th July 2006	
Was there pre-application contact:		No
Date of pre-application contact:	NA	
Name of contact:	NA	
Summary of outcome/Main issues raised: NA		

Ten Commitments Consultation

Rating of Site under Traffic Light Model:	Green		

[1] Macro or Micro

3. Proposed Development

The proposed site:
Southwick Football Club, Old Barn Way, Southwick, West Sussex, BN42 4BF.

Enclose map showing the cell centre and adjoining cells:
See enclosed coverage plots

Type of Structure : *Monopole*
The proposal is for the removal of the existing 15m monopole with an overall height to the top of its antenna of 17.4m with a replacement 17.5m monopole with an overall height to the top of the antenna of 17.9m. The new monopole will see the relocation of the 6 existing Vodafone antenna to a height of 15.5m to base, the proposed installation of a 300mm dish at 16.2m, the installation of 6 of new antenna at 13m to base and 1 of new 300mm dish at 13.5m. The existing Abacus floodlight system will be moved from the existing monopole to the new proposed monopole at a height of 12m. The whole will be sited within a new 5.45m x 3.3m compound surrounded by a matching palisade fence (as per the existing compound fence of the current Vodafone installation). Within the compound will be sited 2 new cabinets (as detailed below) and additional ancillary ground based equipment.

Overall Height: 17.5m	
Equipment Housing: T-UK S8000 Cabinet	
Length:	1.355 Metres
Width:	0.655 Metres
Height:	1.785 Metres
Equipment Housing: T-UK Nokia Stacked Flexicell Node B Cabinet	
Length:	0.492 Metres
Width:	0.590 Metres
Height:	1.00 Metres
Materials : *Steel cabinets painted Olive Green (or any colour that the LPA determines)*	
Tower/mast etc – type of material and external colour:	Galvanised Steel
Equipment housing – type of material and external colour:	*Steel cabinets painted Olive Green (or any colour that the LPA determines)*

Reasons for choice of design:
The proposal as detailed above is considered to be the most sensitive design solution in terms of the technical requirements of T-mobile in regards to their height requirement in order to be able to provide the necessary coverage whilst looking to minimise the overall impact of the development. It allows 2 operators to utilise 1 structure as well as continuing to provide a floodlight solution to the landlord as a requirement to the football ground.

	20W per carrier. For a UMTS network T-Mobile's licence limits the allowed radiated power to an effective isotropic radiating power (EiRP) of +62dBm (approximately 1600W per carrier. The antenna configurations used in the T-Mobile network have a maximum peak transmitter power of 20W per carrier.
Height of antenna (m above ground level)	13.5m

5. Technical Justification

Enclose predictive coverage plots.

Reason(s) why site required e.g. coverage, upgrade, capacity (map attached if required):
T-mobile requires a site at Southwick Football Club in order to be able to provide high quality 2G and 3G coverage to the area of Southwick. The existing area of Southwick and specifically the areas of Fishersgate, parts of Southern Cross, the harbour and railway line currently only receive low quality outdoor coverage. *The proposed installation will allow users of mobile telecommunication from T-mobile to have high quality indoor coverage both residentially and commercially.* *The enclosed coverage plots demonstrate the need for the cell site and highlight the large area of coverage the cell would provide.* *Plots 1 2G/3G Coverage (existing and planned sites)* *Shows the high quality signal coverage that would be received in all types of property (both residential and commercial) and the combined coverage provided when inter-grated into the existing T-mobile network* *Plots 2 2G/3G Coverage (planned site in isolation)* *Demonstrates the level of coverage that will be provided by the cell site in isolation and shows why the central point of the site at Southwick Football Club is required in order to provide unbroken coverage when linked with sites at Mile Oak Road and City Coast.* *Plots 3 2G/3G Coverage (existing coverage without the proposed cell site)* *Shows the low level/quality of coverage currently available in the immediate area.* *Further detail regarding the general operation of the Vodafone network can be found in the*



needs because they have limited range or require line-of-sight. Authorities should take account of these needs. Arbitrary restrictions in one area, such as limits on mast height, may encourage problems of interference and also create corresponding problems in a neighbouring area, such as the need to install a taller mast, or more than one mast, than would otherwise have been necessary to maintain line-of-sight'. The position of the neighbouring T-mobile installations will show that there is limited range from the existing antennae and therefore this additional site is required, as shown in the Coverage Plots. The additional installation has been kept to a minimal height for the area, which will still provide an adequate coverage.

Paragraph 12 of PPG8 states *'factors to be considered concerning the appearance of the mast and ancillary include materials, colour and design. The use of appropriate materials and colouration may allow a mast to blend more easily into its surroundings. Features of design, which an authority may wish to consider include, dimensions (other than height) overall shape and whether the construction is solid or forms an open framework. They should also consider with the developer the availability of alternative designs, which might be more suited to the local environment'.* In terms of nature conservation and wildlife interest there is no evidence that the proposals would have any material effect on the receiving environment, result in loss, or otherwise prejudice the survival of any protected flora and fauna.

It is considered that in this instance the use of a Tree Mast accords directly with this requirement.

In view of this policy, authorities are advised in PPG8 to respond positively to proposals for telecommunications development and to understand the associated special problems and technical needs. That advice and the permitted development rights maintained to facilitate the establishment of networks apply even in locations usually subject to policies of restraint. PPG8 also emphasises the significance of national networks and the context of the proposed installation in this regard is explained above, together with the coverage plots submitted.

Against this background of encouragement, PPG8 also recognises the need, now with greater emphasis, to strike an appropriate balance between operational and environmental considerations. The operators own 10 Commitments are an industry response to introduce a process to better help strike that balance, together with local planning authorities. That process is now included within the Code and has been properly followed leading to such a balance being struck in this case.

Local Policies

West Sussex Structure Plan (2001-2016 Adopted on 25 October 2004)

Policy NE23
(a) Development which facilitates the growth of new and existing telecommunications systems should be permitted provided that: there is a demonstrable need; priority is given to the use of existing buildings or structures, and the sharing of existing masts and sites; and the impact on the environment is acceptable. Development within an Area of Outstanding Natural Beauty should not be permitted unless no alternative site (which meets operational or technical requirements) is available outside the Area or within the Area but which has less impact on the environment. Development which would interfere with existing broadcast and other telecommunications services should not be permitted.

POLICY AB29

The District Planning Authority will grant planning permission for, or approve the details of, telecommunications development where it can be demonstrated that:-

(i) planning permission is required from the District Planning Authority;

(ii) there is no reasonable possibility of sharing existing facilities; and

(iii) in the case of radio masts there is no reasonable possibility of erecting antennas on an existing building or other structure

When considering proposals for telecommunications development, whether or not under permitted development rights, the District Planning Authority, whilst respecting operational requirements, will expect the apparatus to be sited, designed, and, where appropriate, landscaped, so as to minimise its visual impact on the environment in which it is located. Such masts will not be permitted where they would be visible in the wider landscape within the Area of Outstanding Natural Beauty except where special siting needs attributable to technical requirements, such as transmission range or line-of-sight, dictate otherwise.

In regards to the Adur Local Plan and policy AB29

(i) Planning permission is required for this development

(ii) Existing facilities are being utilised (in so far that an existing telecoms base station is being used and the proposed mast is only 0.4m higher to the tops of its antenna than the current structure)

(iii) There are no suitable existing structures or masts that can accommodate T-mobile

In so far as is possible the mast has been designed to minimise the visual impact of the proposed development. It is not felt that a landscaping scheme in this instance would be beneficial to the development due to the screening already afforded to the site by the surrounding walls.

Contact Details

Name: (Agent)	Gregory Dix	Telephone:	01202 856 977
Operator:	Vodafone Ltd	Fax no:	01202 856 801
Address:	Wessex House, Wimborne Dorset BH21 1PB	Email Address:	gdix@savills.com
Signed:	[redacted]	Date:	23/07/2007
Position:	Associate Director	Company: (Agent) (on behalf of Vodafone Ltd)	Savills (L&P) Ltd

License No. Promap: 100020449 Os Map: 759198 Savills Ltd.

vodafone



SCALE 1:50000

vodafone

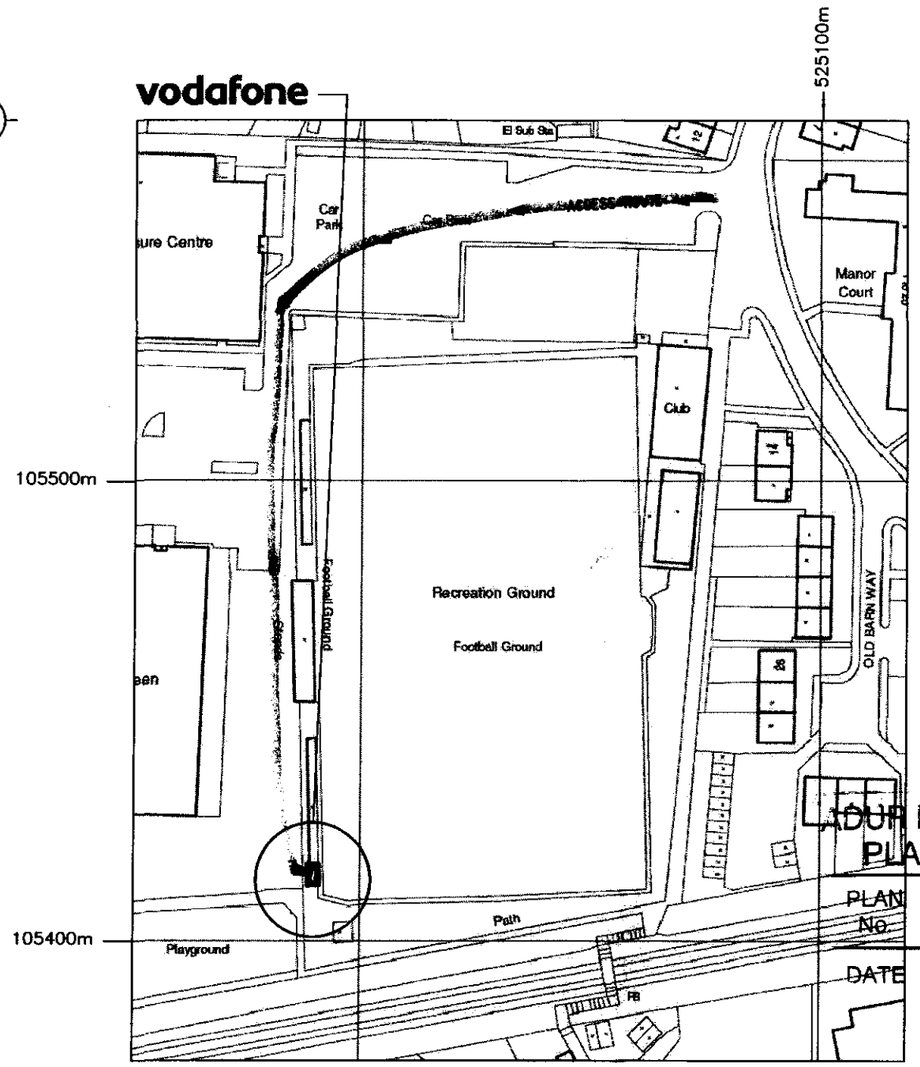

SCALE 1:1250

ADUR DISTRICT COUNCIL
PLANNING DIVISION
PLAN No. Adur/226/07
DATE 25 JUL 2007

NOTE – Reproduced from the Ordnance Survey Map with the permission of the Controller of H.M. Stationery Office. (c) Crown copyright licence number 100024244 Savills (L&P) Ltd. NOTE – Published for the purposes of identification only and although believed to be correct its accuracy is not guaranteed.

SITE NGR: 525000 E / 105400 N

MSV:
DATE: 05/12/06 BY: NC

SITE DIRECTIONS:
FROM A27 TAKE A270 TOWARDS SOUTHWICK. AFTER R'BOUT TAKE 5TH RIGHT INTO SOUTHWICK STREET THEN 1ST LEFT AFTER 500M INTO MANOR HALL ROAD THEN 4TH RIGHT INTO OLD BARN ROAD

SITE ADDRESS: OLD BARN WAY,
SOUTHWICK,
WEST SUSSEX,
BN42 4BF.

savills
Wessex House,
Wimborne,
Dorset,
BH21 1PB
Tel: (01202) 856800
Fax: (01202) 856801

vodafone
Vodafone House,
The Connection,
Newbury,
Berkshire,
RG14 1JX

REV	DATE	DESCRIPTION	BY	CHK
–	19/12/06	PLANNING DRAWINGS	NEH	NC
A	13/02/07	MINOR AMENDMENTS	NEH	NC
B	01/03/07	REVISED COMPOUND LAYOUT	NEH	NC

977 – SOUTHWICK FOOTBALL CLUB
SITE LOCATION MAPS

SCALE	DRAWING STATUS	Site No. Drg No.	REV
AS SHOWN	PROPOSAL	977/01	B

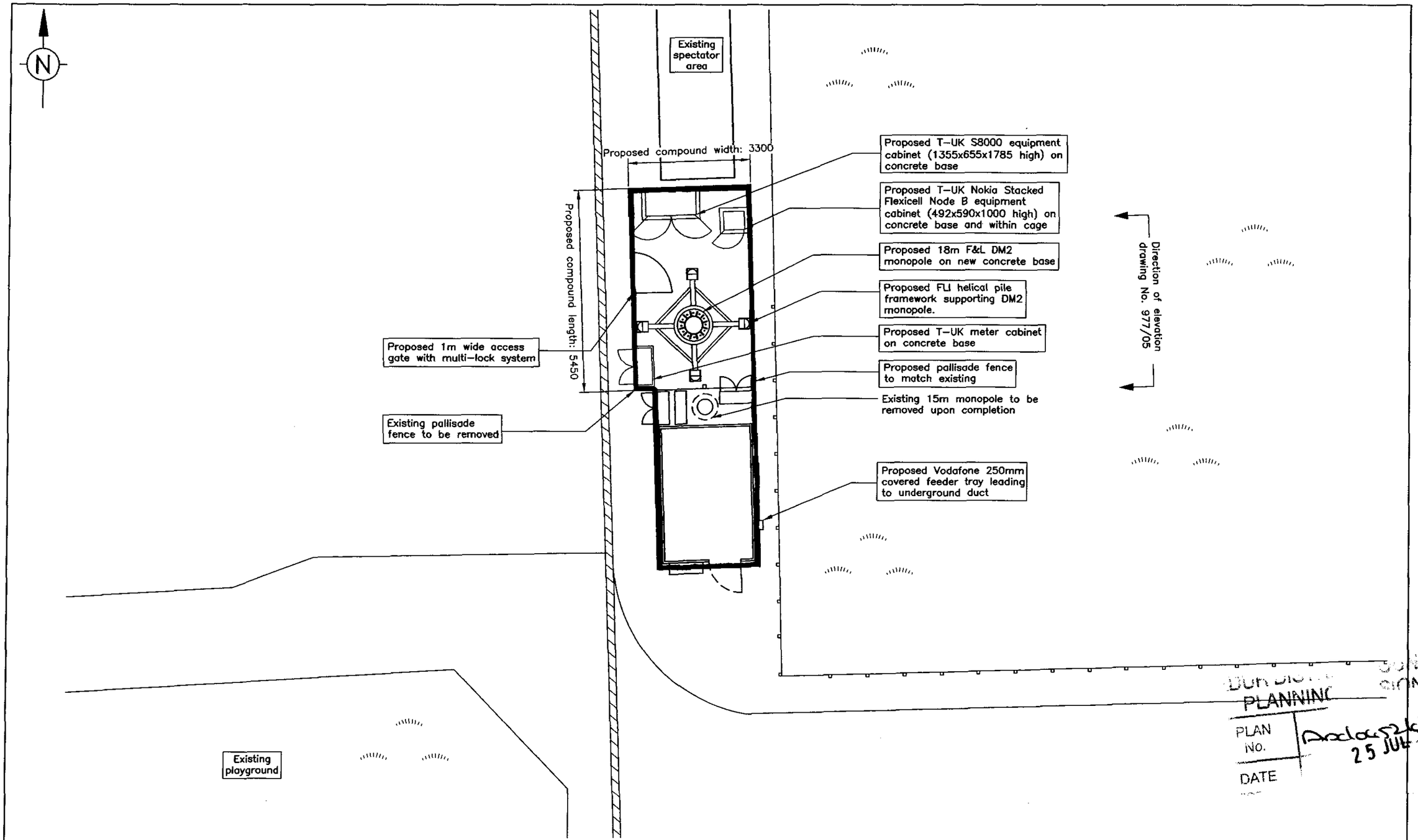

PLANNING

PLAN No.

DATE 25 JUL 2007

These drawings comply with the latest issues of Vodafone documentation H&SP 450 and the contractors antenna build guidelines NRCS/GUIDE/26.

Site Sharer	T–UK
Site Sharer Ref.	55807
VF Application No.	3773

SITE LAYOUT PLAN

Wessex House,
Wimborne,
Dorset,
BH21 1PB
Tel: (01202) 856800
Fax: (01202) 856801

vodafone

Vodafone House,
The Connection,
Newbury,
Berkshire,
RG14 1JX

REV	DATE	DESCRIPTION	BY	CHK
–	19/12/06	PLANNING DRAWINGS	NEH	NC
A	13/02/07	MINOR AMENDMENTS	NEH	NC
B	01/03/07	REVISED COMPOUND LAYOUT	NEH	NC

977 – SOUTHWICK FOOTBALL CLUB
PROPOSED SITE PLAN

SCALE	DRAWING STATUS	Site No. / Drg No.	REV
1:100	PROPOSAL	977/03	B

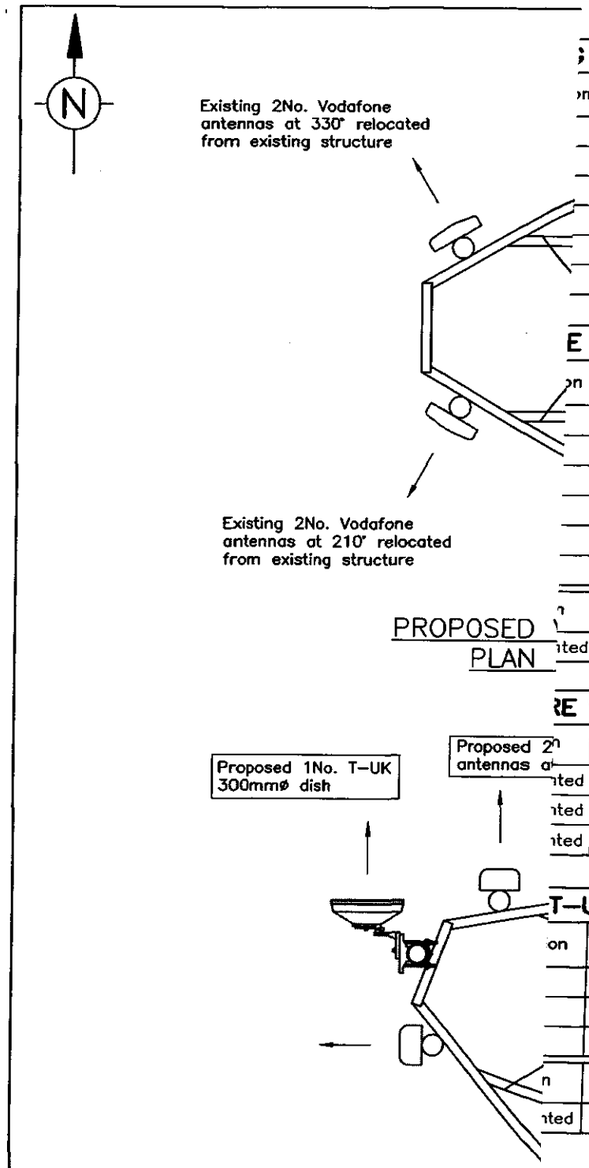

PROPOSED PLAN

VODAFONE ANTENNAS

	Height to Underside	Feeder type	Fe le
	15.00m	LDF4-50	2
	15.00m	LDF4-50	2
	15.00m	LDF4-50	2
	15.00m	LDF4-50	2
	15.00m	LDF4-50	2
	15.00m	LDF4-50	2

E ANTENNAS & TRANSMISSI

n	Height to Underside	Feeder type	Fe len
	15.00m	LDF4-50	3C
	15.00m	LDF4-50	3C
	15.00m	LDF4-50	3C
	15.00m	LDF4-50	3C
	15.00m	LDF4-50	3C
	15.00m	LDF4-50	3C

	Height	IF Cable length	Rem OD
ited	16.20m	31m	N

RE VODAFONE DISHES

Proposed 2n antennas a

	Height	IF Cable length	Rem OD
ited	16.20m	31m	No
ited	16.20m	31m	No
ited	16.20m	31m	No

T-UK ANTENNAS & DISHES

on	Height to Underside	Feeder type	Feed lengt
	13.00m	LDF5-50	17m
	13.00m	LDF5-50	17m
	13.00m	LDF5-50	17m

n	Height	IF Cable length	Remo ODU
ited	13.50m	31m	No

PLANNING

PLAN NO.

RECEIVED

PROPOSE PLAN

STATUS KEY

IS: Installed
Equipment has already been installed

PG: Planning Granted
Planning approval has already been
equipment was not installed at time

PAF: Planning Applied For
Planning has already been applied fo
separate application

Wessex House,
Wimborne,
Dorset,
BH21 1PB
Tel: (01202) 856800
Fax: (01202) 856801

THWICK FOOTBALL CL

PLANS AND SCHEDULE

VING STATUS	Site No.
ROPOSAL	977/

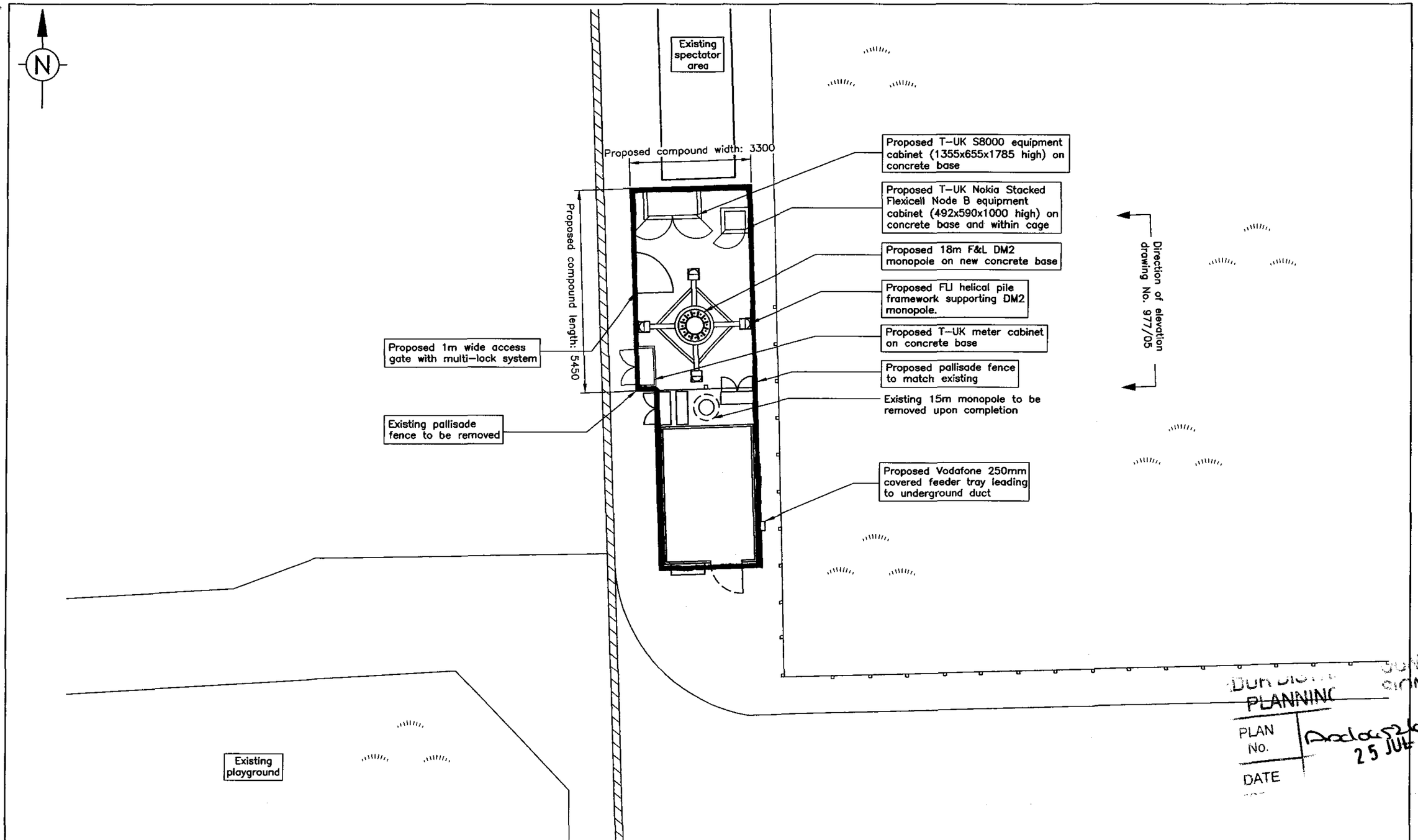

These drawings comply with the latest issues of Vodafone documentation H&SP 450 and the contractors antenna build guidelines NRCS/GUIDE/26.

Site Sharer	T-UK
Site Sharer Ref.	55807
VF Application No.	3773

SITE LAYOUT PLAN

Wessex House,
Wimborne,
Dorset,
BH21 1PB
Tel: (01202) 856800
Fax: (01202) 856801

vodafone

Vodafone House,
The Connection,
Newbury,
Berkshire,
RG14 1JX

REV	DATE	DESCRIPTION	BY	CHK
–	19/12/06	PLANNING DRAWINGS	NEH	NC
A	13/02/07	MINOR AMENDMENTS	NEH	NC
B	01/03/07	REVISED COMPOUND LAYOUT	NEH	NC

977 – SOUTHWICK FOOTBALL CLUB
PROPOSED SITE PLAN

SCALE	DRAWING STATUS	Site No. / Drg No.	REV
1:100	PROPOSAL	977/03	B

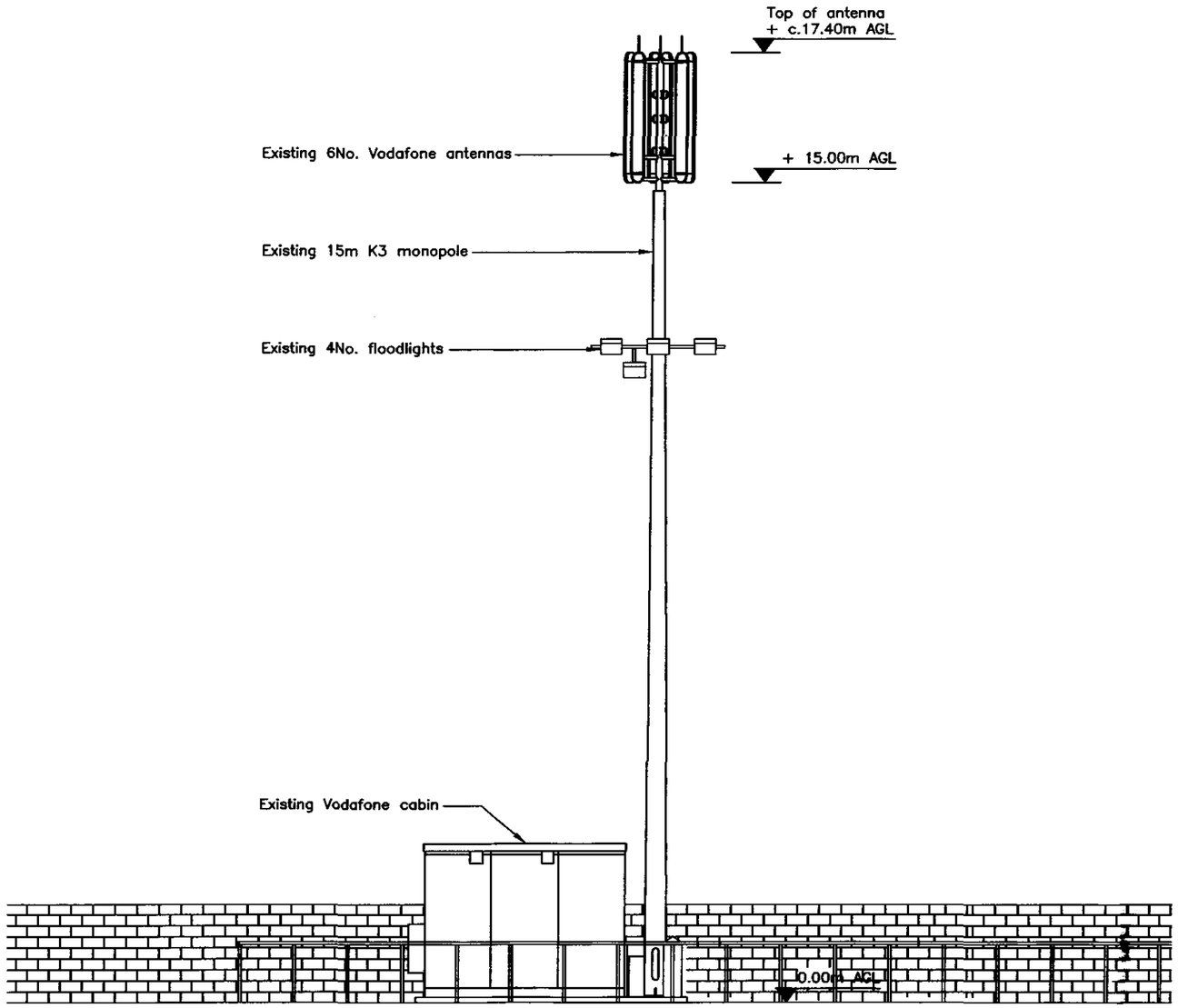

ELEVATION PLAN

DUR DISTRI... OUNCIL
PLANNING ...SION
PLAN No. 05/06/52/07
DATE 25 JUL 2007

These drawings comply with the latest issues of Vodafone documentation H&SP 450 and the contractors antenna build guidelines NRCS/GUIDE/26.

Site Sharer	T-UK
Site Sharer Ref.	55807
VF Application No.	3773

Wessex House,
Wimborne,
Dorset,
BH21 1PB
Tel: (01202) 856800
Fax: (01202) 856801

vodafone

Vodafone House,
The Connection,
Newbury,
Berkshire,
RG14 1JX

REV	DATE	DESCRIPTION	BY	CHK
–	19/12/06	PLANNING DRAWINGS	NEH	NC
A	13/02/07	MINOR AMENDMENTS	NEH	NC
B	01/03/07	REVISED COMPOUND LAYOUT	NEH	NC

977 – SOUTHWICK FOOTBALL CLUB
EXISTING EASTERN ELEVATION

SCALE	DRAWING STATUS	Site No. / Drg No.	REV
1:100	PROPOSAL	977/04	B

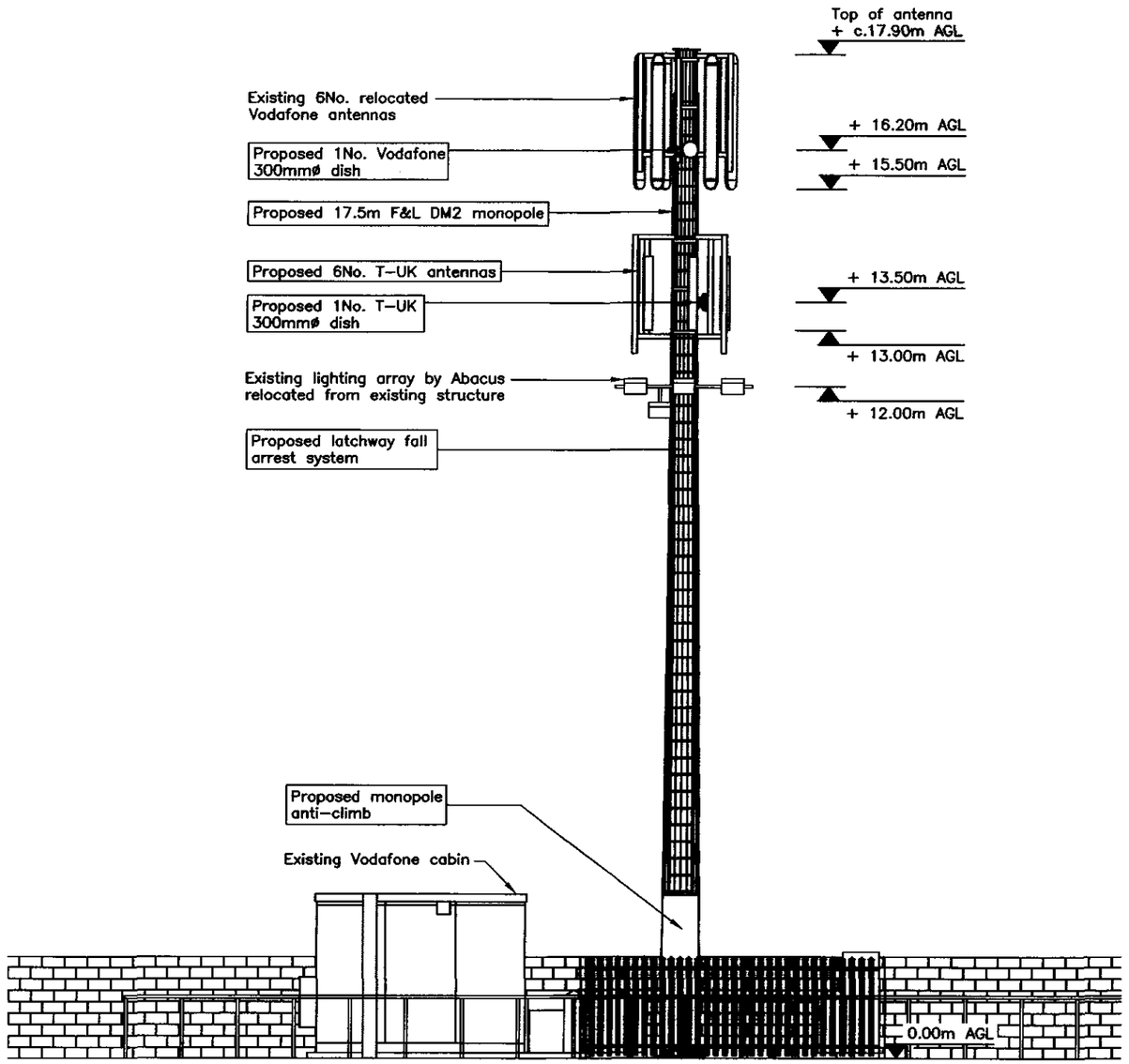

ELEVATION PLAN

DUR DISTRICT COUNCIL
PLANNING DIVISION
PLAN No. Ad045267
DATE 25 JUL 2007

These drawings comply with the latest issues of Vodafone documentation H&SP 450 and the contractors antenna build guidelines NRCS/GUIDE/26.

Site Sharer	T-UK
Site Sharer Ref.	55807
VF Application No.	3773

Wessex House,
Wimborne,
Dorset,
BH21 1PB
Tel: (01202) 856800
Fax: (01202) 856801

vodafone

Vodafone House,
The Connection,
Newbury,
Berkshire,
RG14 1JX

REV	DATE	DESCRIPTION	BY	CHK
–	19/12/06	PLANNING DRAWINGS	NEH	NC
A	13/02/07	MINOR AMENDMENTS	NEH	NC
B	01/03/07	REVISED COMPOUND LAYOUT	NEH	NC

977 – SOUTHWICK FOOTBALL CLUB
PROPOSED EASTERN ELEVATION

SCALE	DRAWING STATUS	Site No. / Drg No.	REV
1:100	PROPOSAL	977/05	B

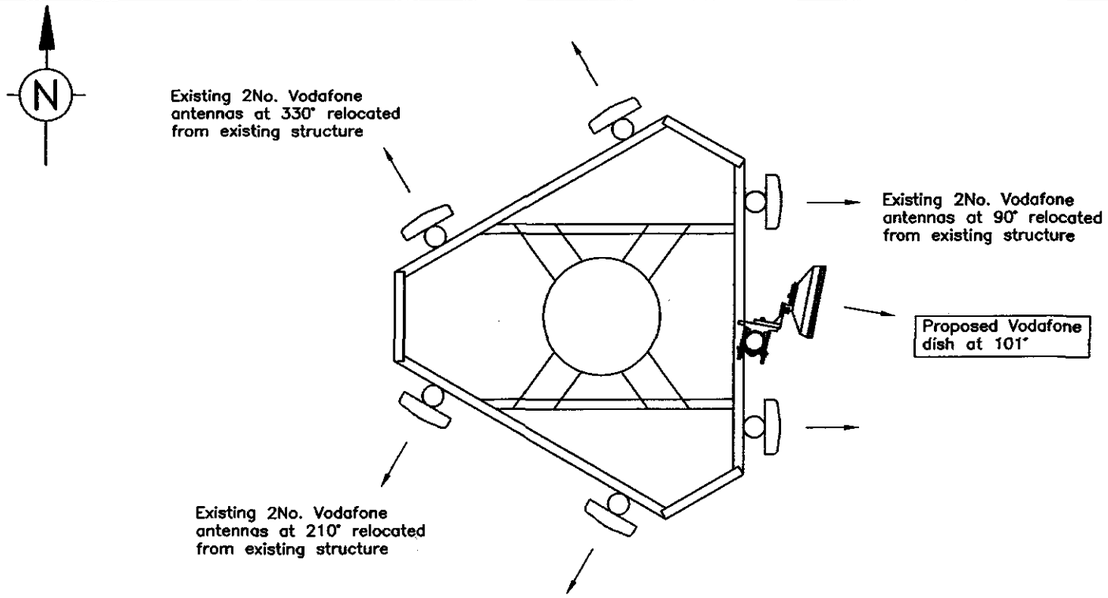

PROPOSED VODAFONE ANTENNA
PLAN @ 16.2m AGL
SCALE 1:25

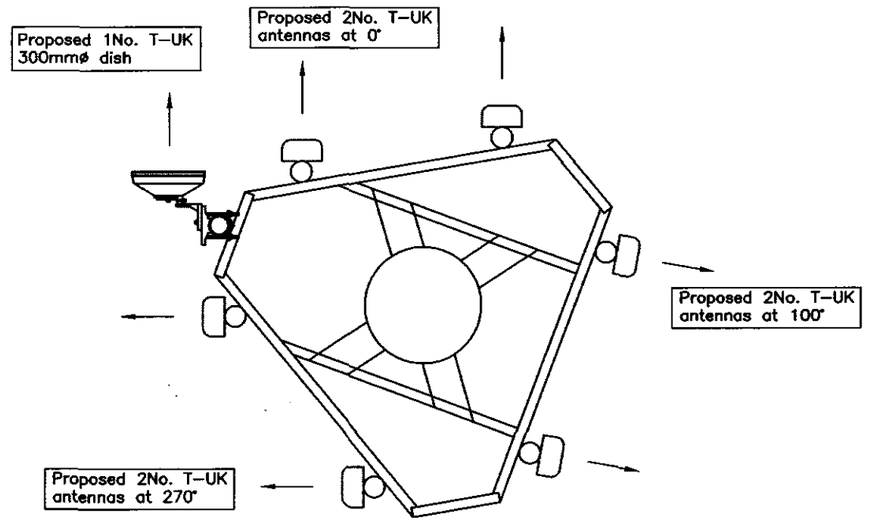

PROPOSED T-UK ANTENNA
PLAN @ 13m AGL
SCALE 1:25

SCHEDULE OF EXISTING VODAFONE ANTENNAS

Cell	No. of	Type	Orientation	Height to Underside	Feeder type	Feeder length	Status
VF Cell 1a	1	GSM	90°	15.00m	LDF4-50	22m	IS
VF Cell 2a	1	GSM	210°	15.00m	LDF4-50	22m	IS
VF Cell 3a	1	GSM	330°	15.00m	LDF4-50	22m	IS
VF Cell 1b	1	UMTS	90°	15.00m	LDF4-50	22m	IS
VF Cell 2b	1	UMTS	210°	15.00m	LDF4-50	22m	IS
VF Cell 3b	1	UMTS	330°	15.00m	LDF4-50	22m	IS

SCHEDULE OF PROPOSED VODAFONE ANTENNAS & TRANSMISSION DISH

Cell	No. of	Type	Orientation	Height to Underside	Feeder type	Feeder length	Status
VF Cell 1a	1	GSM	90°	15.00m	LDF4-50	30m	–
VF Cell 2a	1	GSM	210°	15.00m	LDF4-50	30m	–
VF Cell 3a	1	GSM	330°	15.00m	LDF4-50	30m	–
VF Cell 1b	1	UMTS	90°	15.00m	LDF4-50	30m	–
VF Cell 2b	1	UMTS	210°	15.00m	LDF4-50	30m	–
VF Cell 3b	1	UMTS	330°	15.00m	LDF4-50	30m	–
Dish Ref	*Bearing*	Size (mm)	*Location*	*Height*	IF Cable length	Remote ODUs	Status
VF D1	101°	300	pole mounted	16.20m	31m	No	–

SCHEDULE OF FUTURE VODAFONE DISHES

Dish Ref	Bearing	Size (mm)	Location	Height	IF Cable length	Remote ODUs	Status
VF D2	TBC°	600	pole mounted	16.20m	31m	No	FUTURE
VF D3	TBC°	600	pole mounted	16.20m	31m	No	FUTURE
VF D4	TBC°	600	pole mounted	16.20m	31m	No	FUTURE

SCHEDULE OF PROPOSED T-UK ANTENNAS & DISHES

Cell	No. of	Type	Orientation	Height to Underside	Feeder type	Feeder length	Status
TM Cell 1a	2	Powerwave 7721	0°	13.00m	LDF5-50	17m	–
TM Cell 1b	2	Powerwave 7721	100°	13.00m	LDF5-50	17m	–
TM Cell 1c	2	Powerwave 7721	270°	13.00m	LDF5-50	17m	–
Dish Ref	Bearing	Size (mm)	Location	Height	IF Cable length	Remote ODUs	Status
T-UK D1	1°	300	pole mounted	13.50m	17m	No	–

PLANNING
PLAN No. A5c6a526
RECEIVED 25 JUL 2007

Site Sharer	T-UK
Site Sharer Ref.	55807
VF Application No.	3773

STATUS KEY

IS: Installed
Equipment has already been installed

PG: Planning Granted
Planning approval has already been granted, but equipment was not installed at time of survey

PAF: Planning Applied For
Planning has already been applied for under a separate application

Wessex House,
Wimborne,
Dorset,
BH21 1PB
Tel: (01202) 856800
Fax: (01202) 856801

vodafone

Vodafone House,
The Connection,
Newbury,
Berkshire,
RG14 1JX

REV	DATE	DESCRIPTION	BY	CHK
–	19/12/06	PLANNING DRAWINGS	NEH	NC
A	13/02/07	MINOR AMENDMENTS	NEH	NC
B	01/03/07	REVISED COMPOUND LAYOUT	NEH	NC

977 – SOUTHWICK FOOTBALL CLUB
OPERATOR PLANS AND SCHEDULES

SCALE	DRAWING STATUS	Site No.	Drg No.	REV
AS SHOWN	PROPOSAL	977	/06	B

T-Mobile

2G COVERAGE PLOTS

Date Created: 03 January 2007

T-Mobile Cell Id: 55807
T-Mobile Site Name: VF 977 SOUTHWICK FOOTBALL CLUB

Received
25 JUL 2007

Purpose of Site

The site is required to provide a high level of 2G coverage and a high grade of service to the Southwick area. In order to provide coverage at commercial and residential indoor levels, the populated areas should be coloured magenta and green respectively.

Plot ref. 45818 – Coverage from existing and planned sites without 55807 VF 977 SOUTHWICK FOOTBALL CLUB

The plot shows the coverage from existing and planned sites where planning permission has been approved or submitted. The coverage does not include cell 55807 VF 977 SOUTHWICK FOOTBALL CLUB or any sites where planning permission has not yet been submitted. The plot shows that the local area of Southwick is not adequately covered to commercial and residential indoor signal levels.

Plot ref. 45819 – Coverage from 55807 VF 977 SOUTHWICK FOOTBALL CLUB in isolation

The plot shows the coverage provided from cell 55807 VF 977 SOUTHWICK FOOTBALL CLUB in isolation at an assumed transmission height of 14 m. The plot shows that the site provides commercial and residential indoor signal levels to the local area of Southwick.

Plot ref. 45820 – Coverage from 55807 VF 977 SOUTHWICK FOOTBALL CLUB and surrounding sites

The plot shows the coverage from 55807 VF 977 SOUTHWICK FOOTBALL CLUB and surrounding sites where planning permission has been approved or submitted. This plot shows the improvement in coverage that this site brings to the area of Southwick when compared to plot ref. 45818.

KEY TO COVERAGE PLOTS

2G stands for second generation mobile services and is also known as GSM (Global System for Mobile Communications). *Analogue Mobile was the first generation of mobile communications (1G), and was soon followed by GSM or 2G and* GPRS (General Packet Radio Service) or 2.5G and lately UMTS (Universal Mobile Telecommunications System) or 3G. T Mobile's GSM network not only provides high quality voice service but also offers GPRS data services.

The plots submitted are a geographical representation of the predicted service level coverage. This is a result of simulation software that predicts the coverage through advanced modelling and calculations. The main factors which affect the calculations are; the power and the frequency of the signal emitted, the height of the antenna, the topography and traffic forecast of the area and the ground clutter such as buildings. However, T-Mobile UK's predictor is unable to account for local tree heights and road/railway cuttings. These cause further attenuation of the signal.

Predicted Coverage Levels Shown On Plots

Coloured bands depict service levels. In the enclosed plot the colours represent different service levels as follows:

■	Sufficient signal strength to provide indoor service for Urban or Commercial areas.	Urban and Commercial level of coverage
□	Sufficient signal strength to provide indoor service for Suburban and Residential areas.	Suburban and Residential level of coverage
■	Sufficient signal strength to provide In-vehicle service.	In-vehicle level of coverage

Existing and Planned Sites and its Location are Indicated by a Circle with its Site Name

● In-Service sites or sites where planning permission has been submitted/approved.

○ Nominal sites or planned sites where planning permission has not yet been submitted.
Nominal sites are ideal location where an area will be searched to find suitable sites. It does not indicate a definite location where a site will be built. A planned site however, already has its exact location identified.

Existing and Planned Sites shown on Plots

Cell Id	Northing	Easting	Site Name	Notes
51549	106209	525007	MILE OAK ROAD SW	Planning permission approved.
51564	105506	525991	RIVERVALE CAR COMPOUND	Application to be submitted.
55807	105312	525025	VF 977 SOUTHWICK FOOTBALL CLU	Site being justified in these plots.
61631	105015	526165	CITY COAST CHRISTIAN OUTREACH	Site already exists.

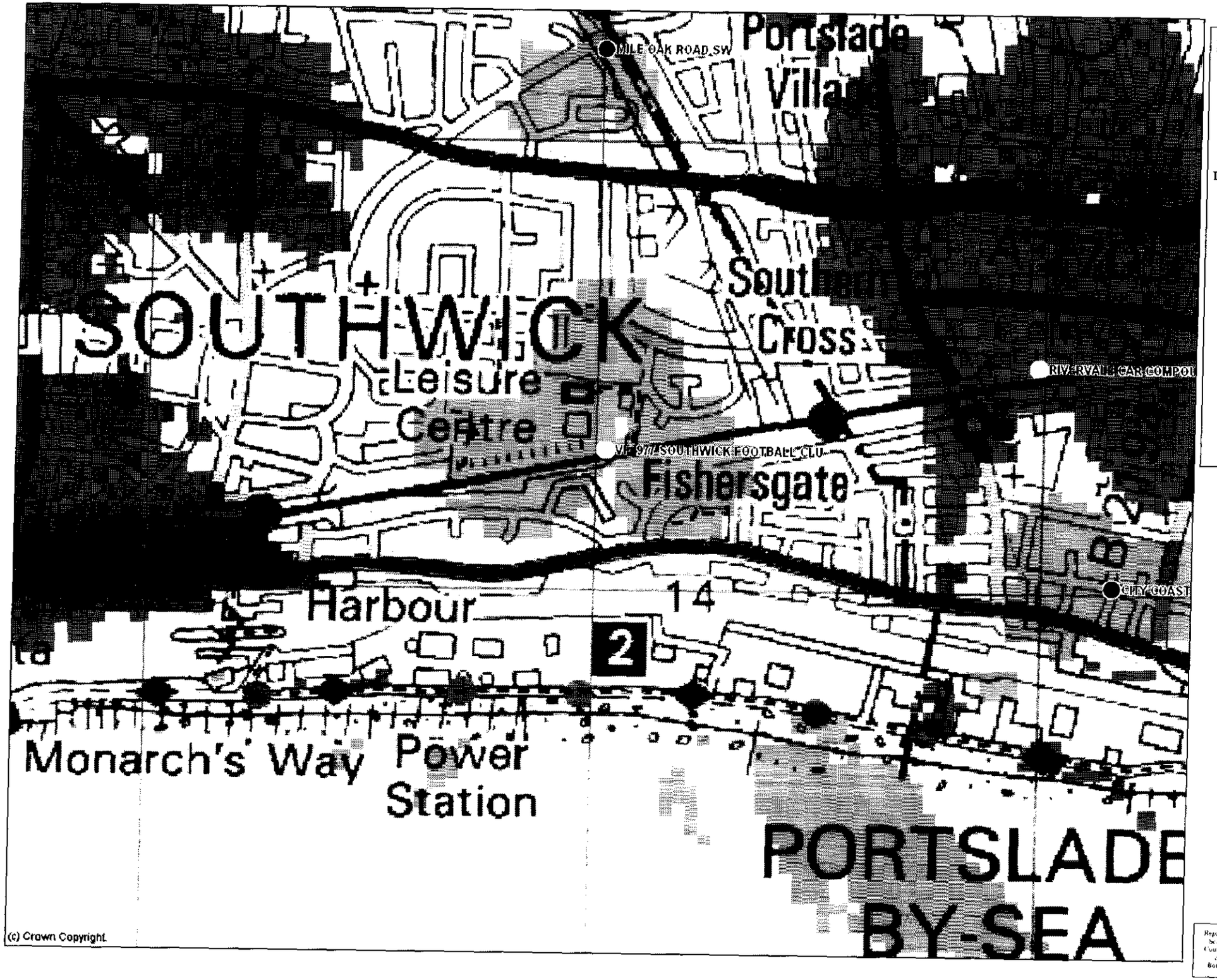

2G COVERAGE

T-Mobile Plot Ref: 45820

Cell 55807

Coverage from existing and planned sites in the area including the proposed cell 55807 VF 977 SOUTHWICK

LEGEND

- **Urban and Commercial level of coverage.**
- **Suburban and Residential level of coverage.**
- **In-Vehicle coverage**
- **In-service sites or sites where planning permission has been submitted/approved.**
- **Nominal sites or planned sites where planning permission has not yet been submitted.**

Reproduced from the 1997 Ordnance Survey 1:50,000 Scale Landranger map with the permission of The Controller of Her Majesty's Stationary Office, Crown copyright Mercury Personal Communications, Borehamwood, Herts, Licence No. AL 51286A0001

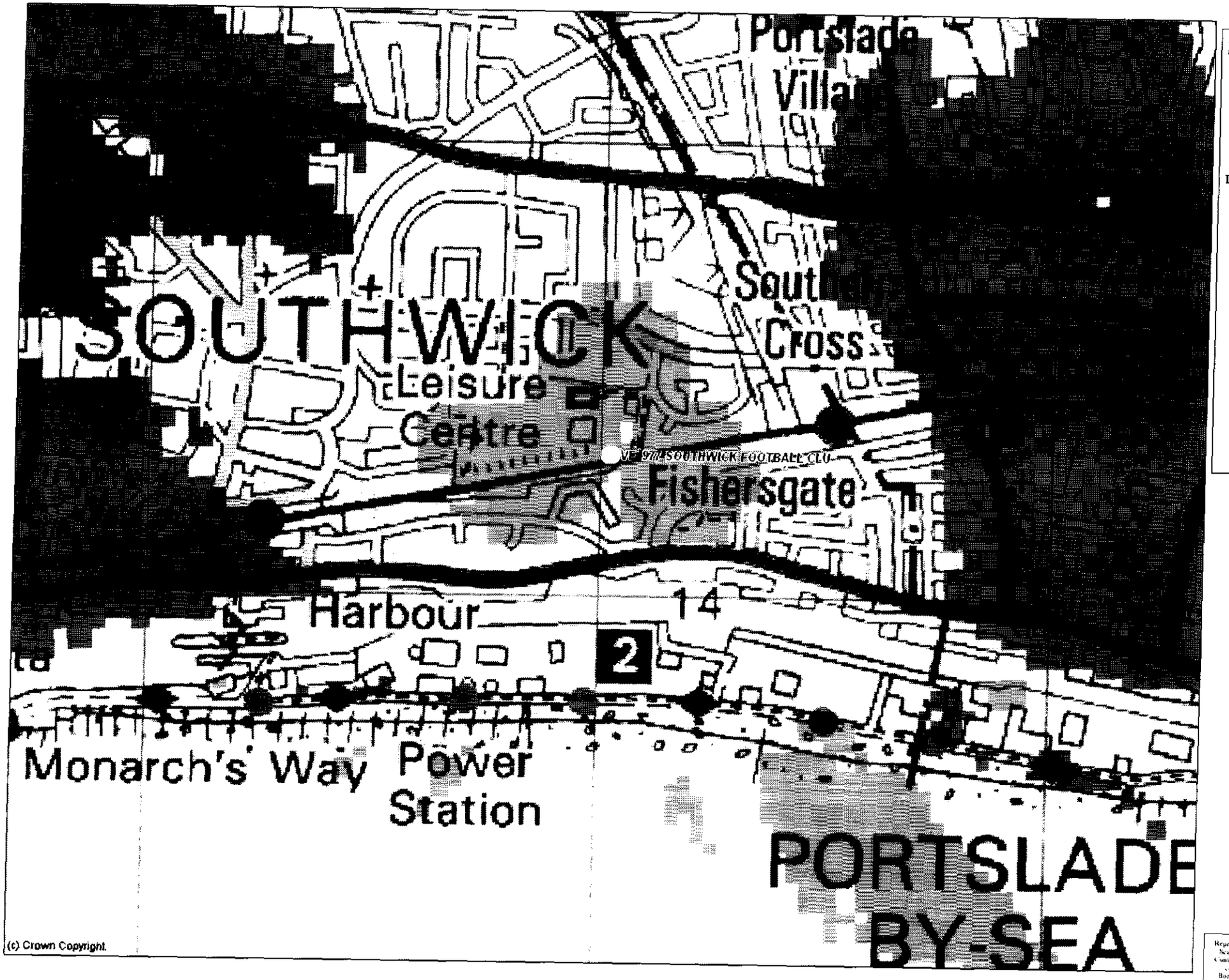

2G COVERAGE

T-Mobile Plot Ref: 45819

Cell 55807

Coverage from the proposed cell 55807 VF 977 SOUTHWICK FOOTBALL CLUB in isolation.

LEGEND

- **Urban and Commercial *level of coverage.***
- **Suburban and *Residential level of* coverage.**
- ***In-Vehicle* coverage**
- **In-service sites or sites where planning permission has been *submitted/approved.***
- **Nominal sites or planned sites where planning permission has not yet been submitted.**

Reproduced from the 1997 Ordnance Survey 1:50 000 Scale Landranger map with the permission of The Controller of Her Majesty's Stationery Office, Crown copyright Mercury Personal Communications, Borehamwood, Herts, Licence No. AL 51288A0001

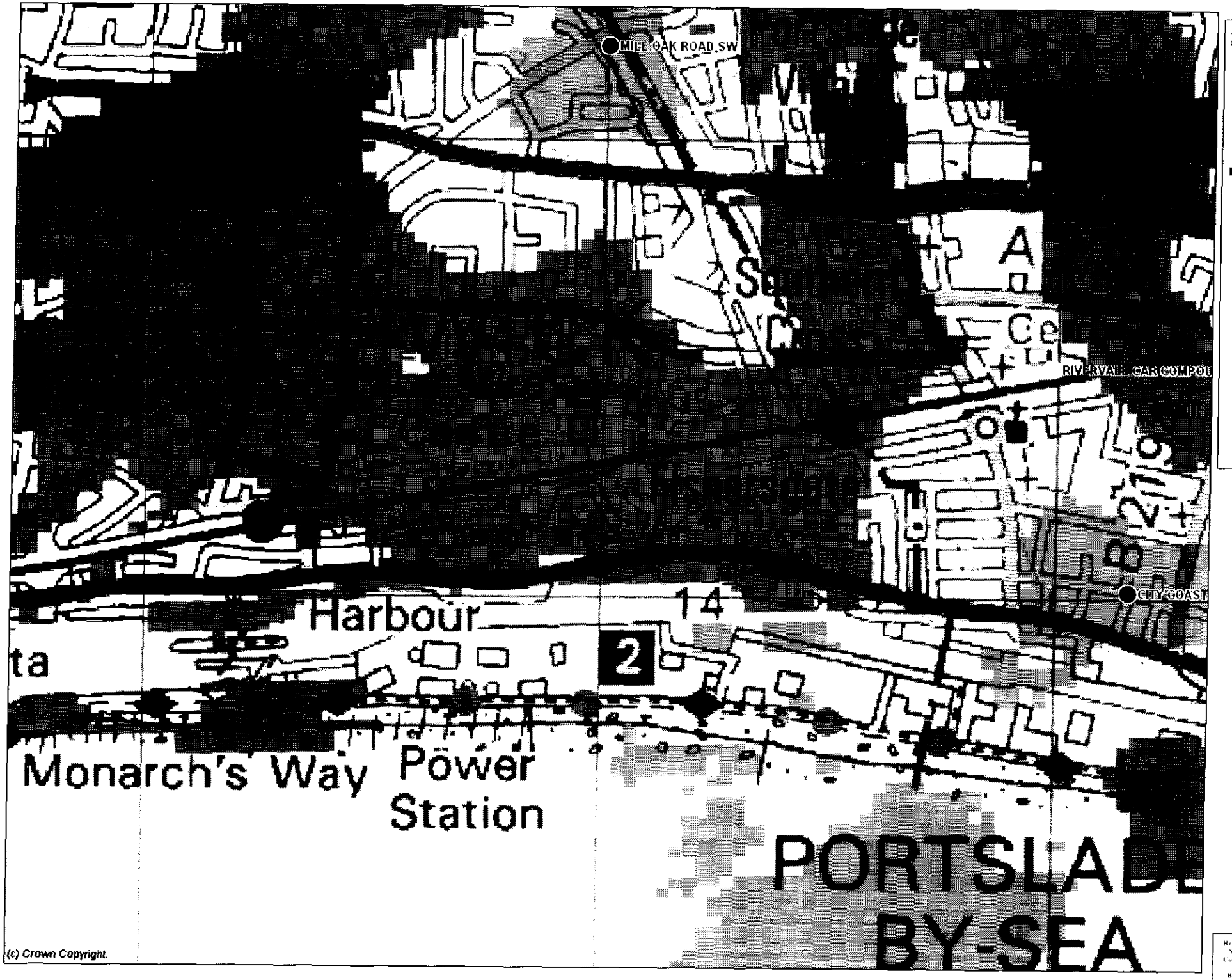

2G COVERAGE

T-Mobile Plot Ref: 45818

Cell 55807

Coverage from existing and planned sites in the area excluding the proposed cell *55807 VF 977 SOUTHWICK*

LEGEND

- **Urban and Commercial level of coverage.**
- **Suburban and Residential level of coverage.**
- **In-Vehicle coverage**
- **In-service sites or sites where planning permission has been submitted/approved.**
- **Nominal sites or planned sites where planning permission has not yet been submitted.**

Reproduced from the 1997 Ordnance Survey 1:50 000 Scale Landranger map with the permission of The Controller of Her Majesty's Stationery Office, Crown copyright Mercury Personal Communications, Berkhamwood, Herts. Licence No. AL 51286A0001

T-Mobile

3G COVERAGE PLOTS

Date Created: 03 January 2007

T-Mobile Cell Id: 55807
T-Mobile Site Name: VF 977 SOUTHWICK FOOTBALL CLUB

Purpose of Site

The site is required to provide a high level of 3G coverage and a high grade of service to the Southwick area. In order to provide coverage at commercial and residential indoor levels, the populated areas should be coloured magenta and green respectively.

Plot ref. 45802 – Coverage from existing and planned sites without 55807 VF 977 SOUTHWICK FOOTBALL CLUB

The plot shows the coverage from existing and planned sites where planning permission has been approved or submitted. The coverage does not include cell 55807 VF 977 SOUTHWICK FOOTBALL CLUB or any sites where planning permission has not yet been submitted. The plot shows that the local area of Southwick is not adequately covered to commercial and residential indoor signal levels.

Plot ref. 45810 – Coverage from 55807 VF 977 SOUTHWICK FOOTBALL CLUB in isolation

The plot shows the coverage provided from cell 55807 VF 977 SOUTHWICK FOOTBALL CLUB in isolation at an assumed transmission height of 14m. The plot shows that the site provides commercial and residential indoor signal levels to the local area of Southwick.

Plot ref. 45811 – Coverage from 55807 VF 977 SOUTHWICK FOOTBALL CLUB and surrounding sites

The plot shows the coverage from 55807 VF 977 SOUTHWICK FOOTBALL CLUB and surrounding sites where planning permission has been approved or submitted. This plot shows the improvement in coverage that this site brings to the area of Southwick when compared to plot ref. 45802.

KEY TO COVERAGE PLOTS

3G stands for third generation mobile services and is also known as UMTS (Universal Mobile Telecommunications System). Analogue Mobile was the first generation of mobile communications (1G), and was soon followed by GSM (Global System for Mobile Communications) or 2G and GPRS (General Packet Radio Service) or 2.5G. UMTS represents an evolution from today's 'second generation', offering a platform for faster data speeds, therefore enabling more efficient services. The T-Mobile 3G network to be made available to customers will allow internet browsing, music, video, and a host of other services, to be delivered on demand to their mobiles.

The plots submitted are a geographical representation of the predicted service level coverage. This is a result of simulation software that predicts the coverage through advanced modelling and calculations. The main factors which affect the calculations are; the power and the frequency of the signal emitted, the height of the antenna, the topography and traffic forecast of the area and the ground clutter such as buildings. However, T-Mobile UK's predictor is unable to account for local tree heights and road/railway cuttings. These cause further attenuation of the signal.

Predicted Coverage Levels Shown On Plots

Coloured bands depict service levels. In the enclosed plot the colours represent different service levels as follows:

■	Sufficient signal strength to provide indoor service for Urban or Commercial areas.	Urban and Commercial level of coverage
□	Sufficient signal strength to provide indoor service for Suburban and Residential areas.	Suburban and Residential level of coverage
■	Sufficient signal strength to provide only Outdoor service.	Outdoor level of coverage

Location of Existing and Planned Sites are Indicated by a Circle and Site Name

● In-Service sites or sites where planning permission has been submitted/approved.

○ Nominal sites or planned sites where planning permission has not yet been submitted.
Nominal sites are ideal location where an area will be searched to find suitable sites. It does not indicate a definite location where a site will be built. A planned site however, already has its exact location identified.

Existing and Planned Sites shown on Plots

Cell Id	Northing	Easting	Site Name	Notes
51549	106209	525007	MILE OAK ROAD SW	Site already exists.
51564	105506	525991	RIVERVALE CAR COMPOUND	Application to be submitted.
55807	105312	525025	VF 977 SOUTHWICK FOOTBALL CLU	Site being justified in these plots.

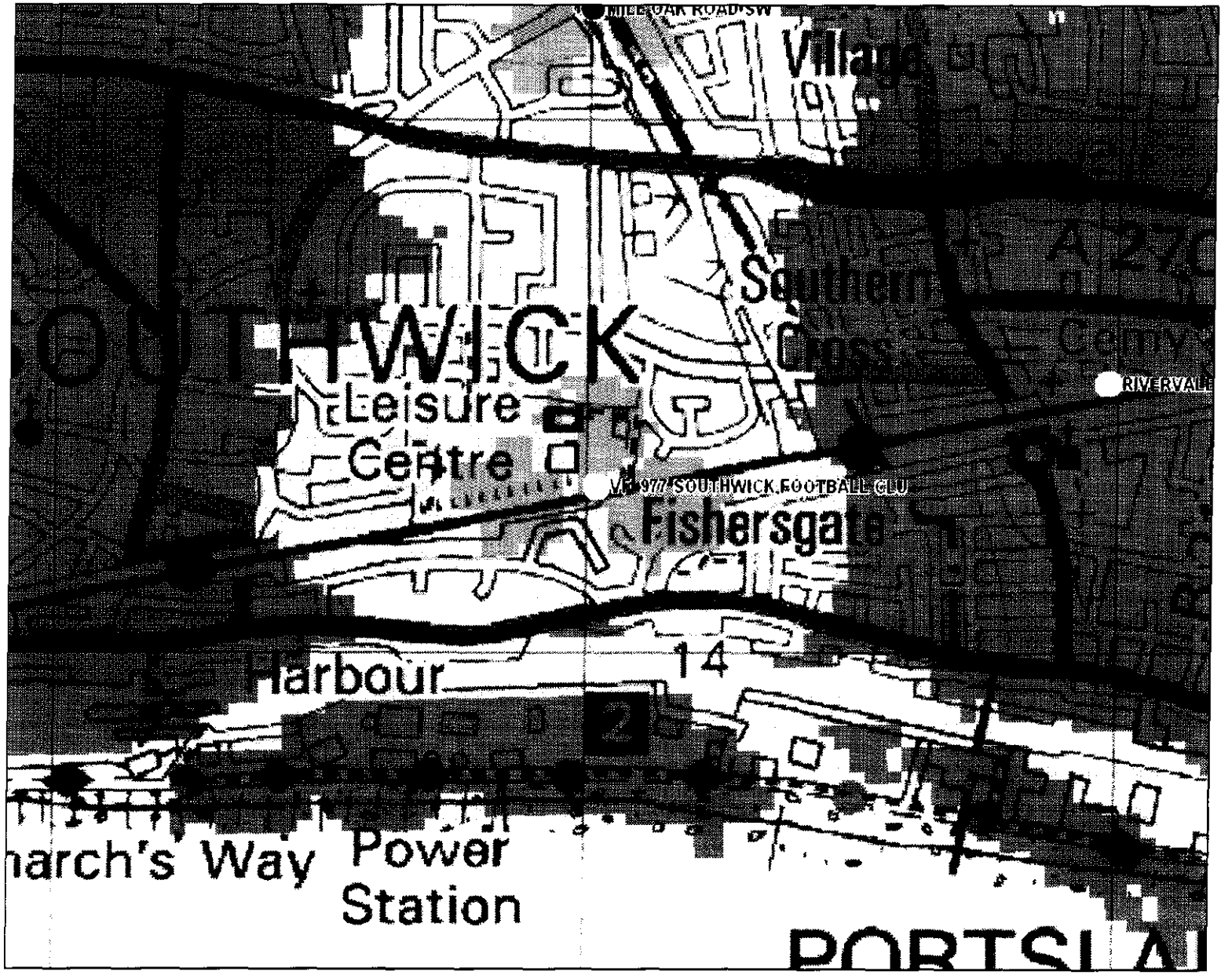

3G COVERAGE

T-Mobile Plot Ref: 45811

Cell 55807

Coverage from existing and planned sites in the area including the proposed cell 55807 VF 977 SOUTHWICK

LEGEND

- **Urban and Commercial level of coverage.**
- ***Suburban and* Residential level of coverage.**
- **Outdoor level of *coverage***
- **In-service sites or sites where planning permission has been submitted/approved.**
- ***Nominal sites or* planned sites where planning permission has not yet been submitted.**

Reproduced from the 1997 Ordnance Survey 1:50 000 Scale Landranger map with the permission of The Controller of Her Majesty's Stationary Office, Crown copyright Mercury Personal Communications, Borehamwood, Herts. Ukence No. AL 51286A0001

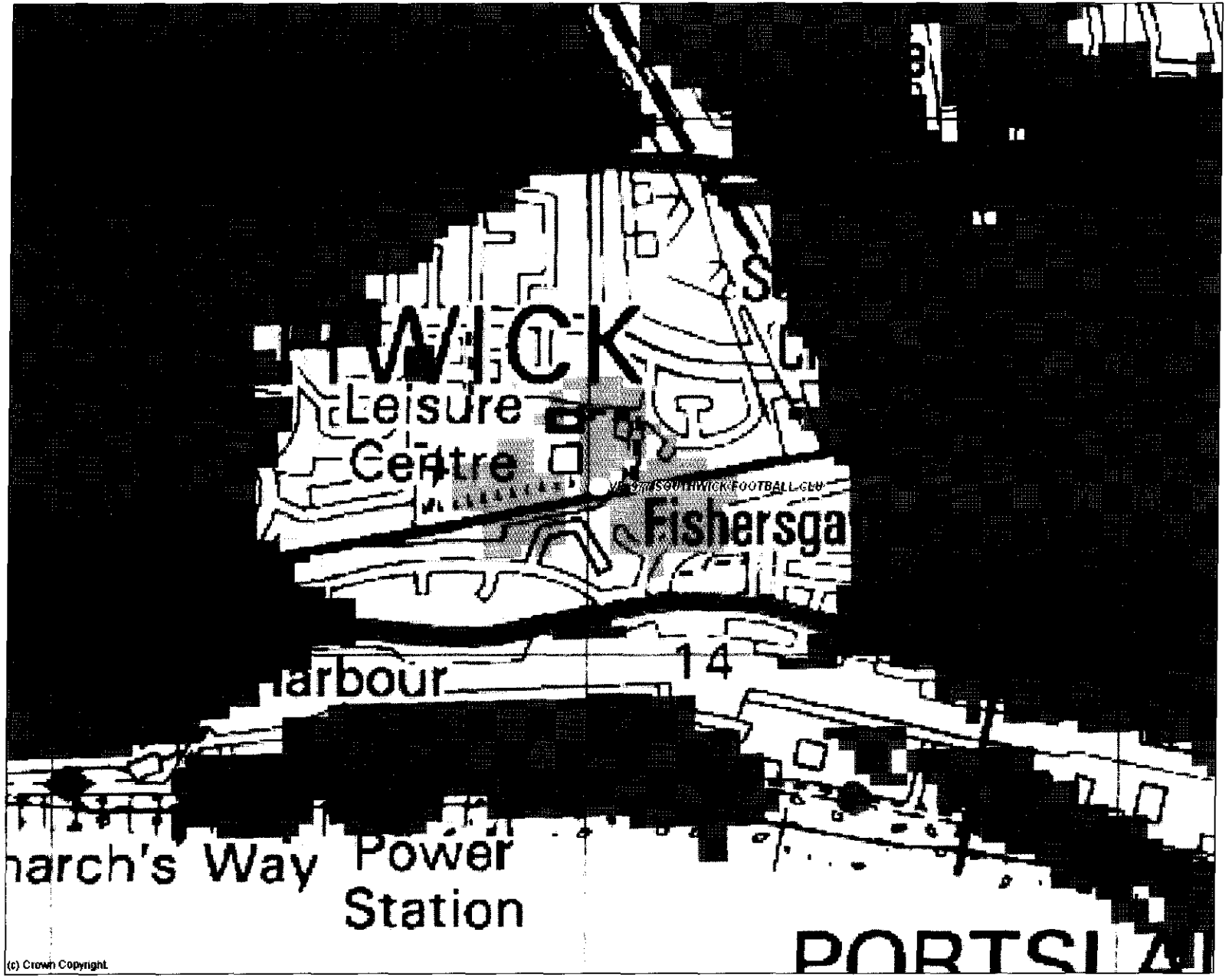

3G COVERAGE

T-Mobile Plot Ref: 45810

Cell 55807

Coverage from the proposed cell 55807 VF 977 SOUTHWICK FOOTBALL CLUB in isolation.

LEGEND

- **Urban and Commercial level of coverage.**
- **Suburban and Residential level of coverage.**
- ***Outdoor level of* coverage**
- **In-service sites or sites where planning permission has been submitted/approved.**
- **Nominal sites or planned sites where planning permission has not yet been submitted.**

Reproduced from the 1997 Ordnance Survey 1:50 000 Scale Landranger map with the permission of The Controller of Her Majesty's Stationary Office, Crown copyright Mercury Personal Communications, Borehamwood, Herts, Licence No. AL 51280A0001



3G COVERAGE

T-Mobile Plot Ref: 45802

Cell 55807

Coverage from existing and planned sites in the area excluding the proposed cell 55807 VF 977 SOUTHWICK

LEGEND

- **Urban and Commercial level of coverage.**
- **Suburban and Residential level of coverage.**
- **Outdoor level of coverage**
- **In-service sites or sites where planning permission has been submitted/approved.**
- **Nominal sites or planned sites where planning permission has not yet been submitted.**

Reproduced from the 1997 Ordnance Survey 1:50 000 Scale Landranger map with the permission of The Controller of Her Majesty's Stationery Office, Crown copyright Mercury Personal Communications, Borehamwood, Herts. Licence No. AL 51286A0001