The property owner is required to serve a party structure notice on the adjoining owner as required by The Party Wall etc Act 1996.

Plan31 of 3

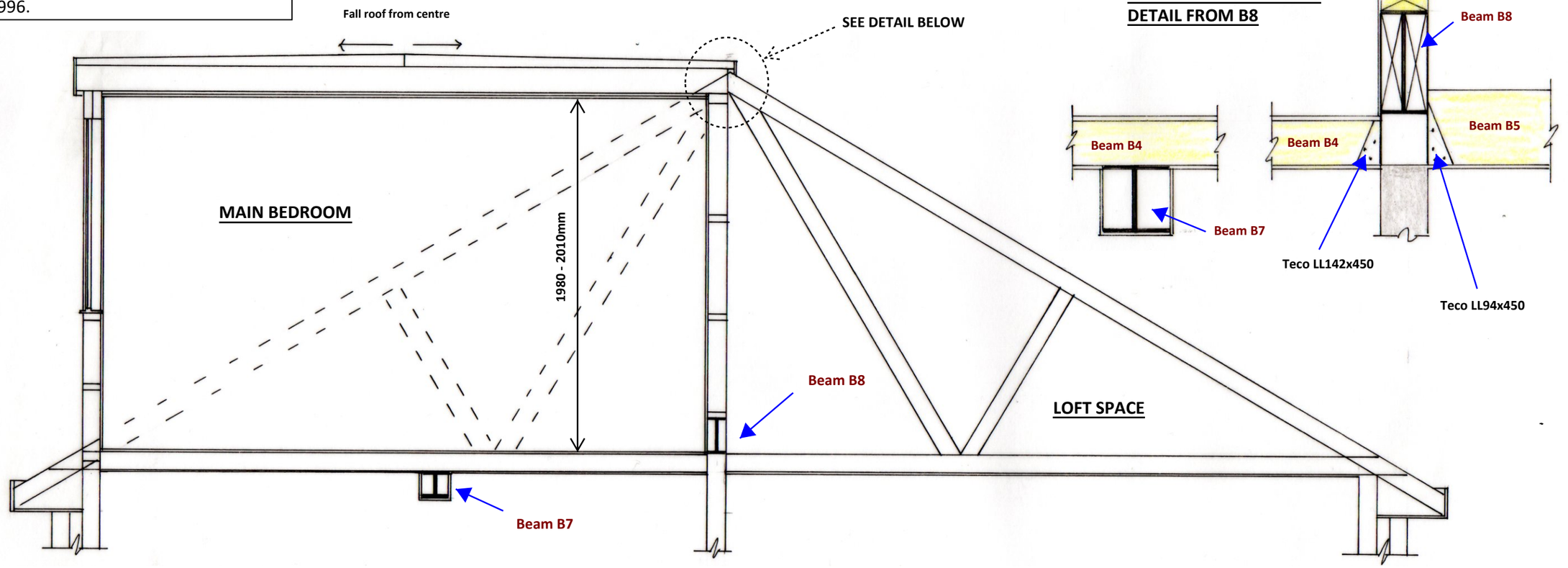

SECTION 1:25

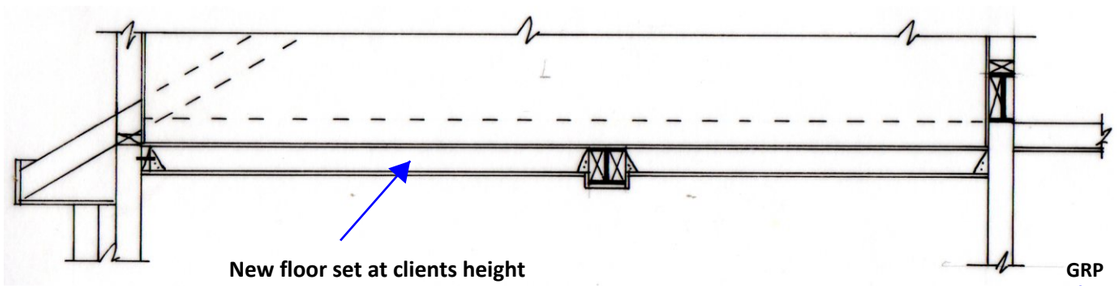

SECTION 1:25 SHOWING ALTERNATIVE FLOOR POSITION

Buy dropping the floor level (removing existing ceilings to back half of house an extra 100 - 150mm headroom could be achieved in the loft bedroom.

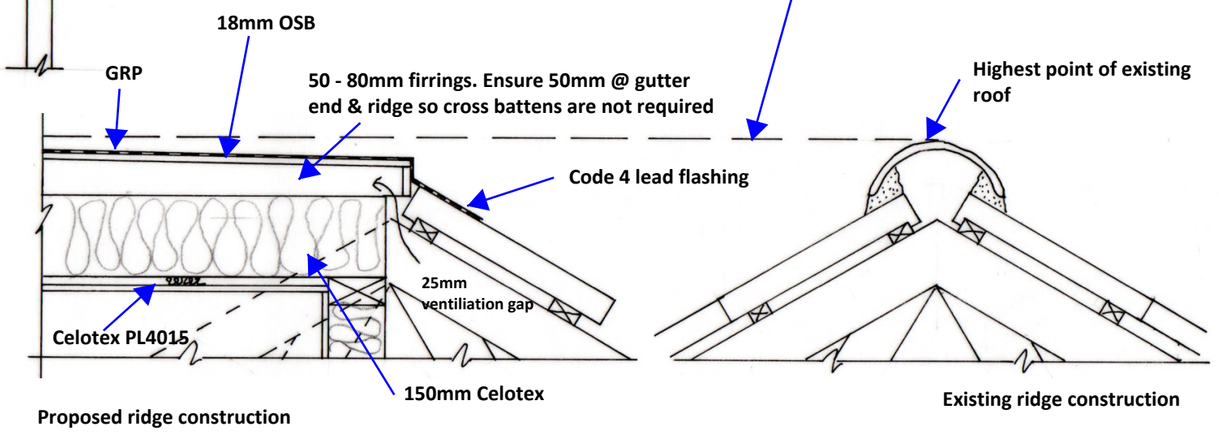

RIDGE DETAIL

A3

CLIENT: Mr & Mrs Dene

DATE: 02.02.2021

DRWG No: BSB/20/819/3

1:50 @ A3

LOFT CONVERSION

77 HAYLEY ROAD, LANCING

S.Barrett C.Build E, CABE
Architectural, Structural & Party Wall Services.
bsbpartywalls@yahoo.co.uk
07974 715009

cabe chartered association of building engineers