Window 12
2x

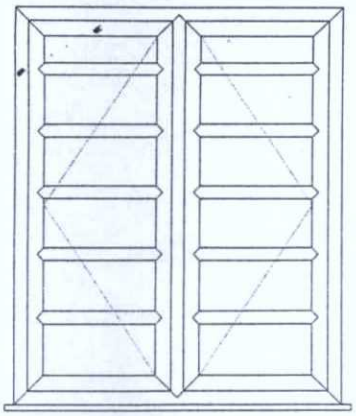

1-1700x2100
Window No: 12

Window 13
2x

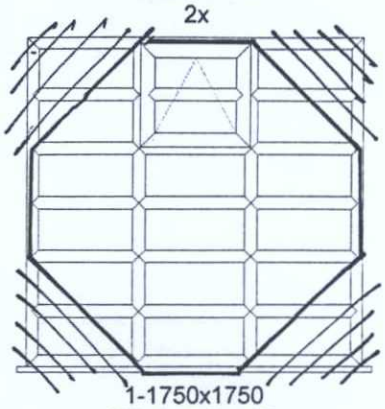

1-1750x1750
Window No: 13

All widows are viewed from outside and sizes are approximate