SITE COMPOUND LAYOUT

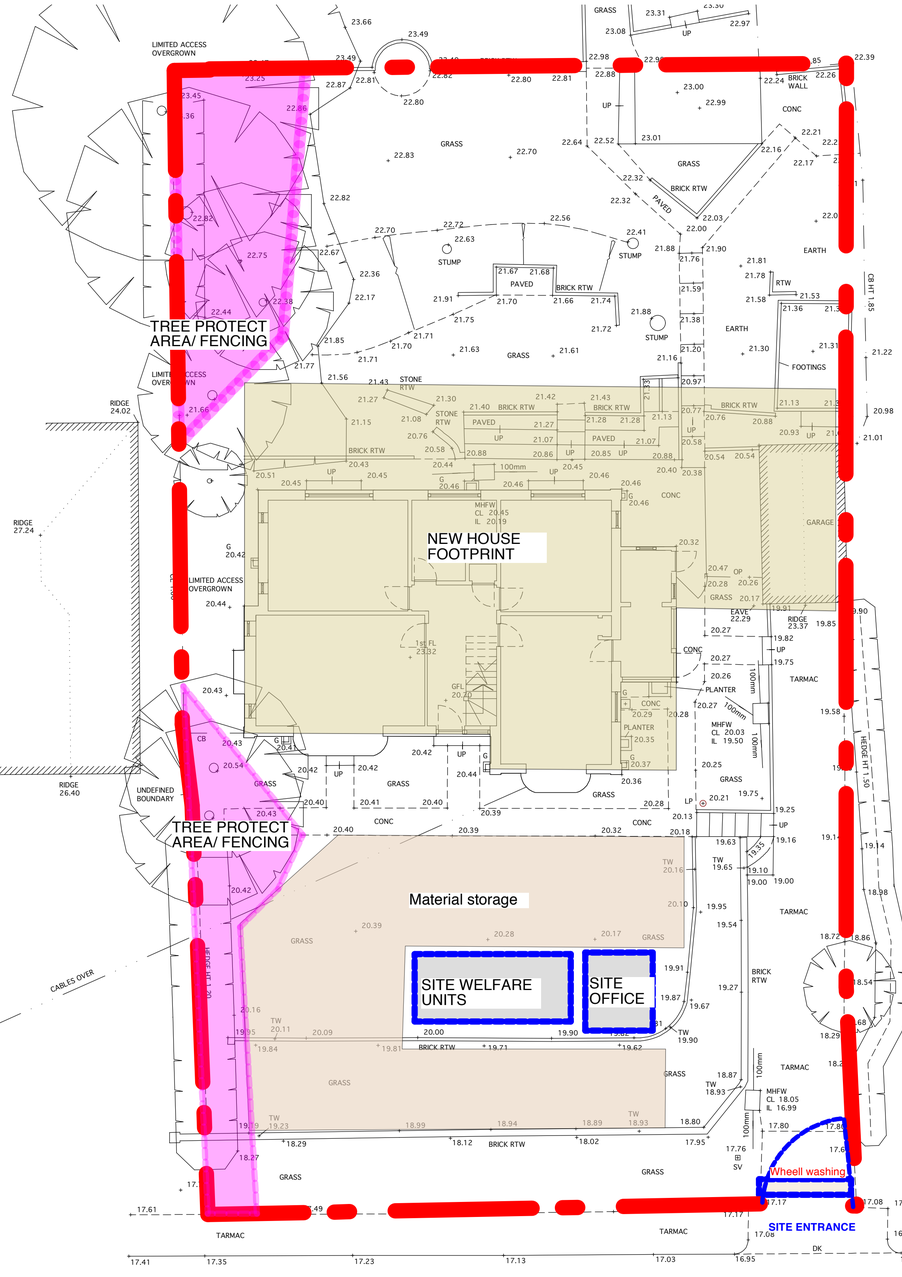

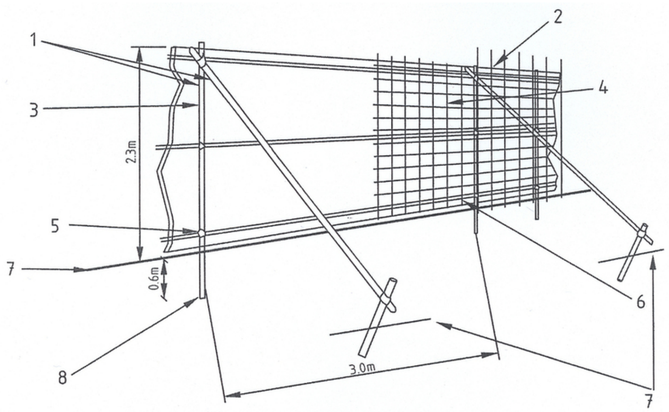

1 Standard scaffold poles
2 Uprights to be driven into the ground
3 Panels secured to uprights with wire ties and, where necessary, standard scaffold clamps
4 Weldmesh wired to the uprights and horizontals
5 Standard clamps
6 Wire twisted and secured on inside face of fencing to avoid easy dismantling
7 Ground level
8 Approx. 0.6m driven into the ground

Figure 2. – Protective fencing for RPA

DETAILS OF TREE/ BUSHES AND HEDGES

SITE HOARDING

MATERIAL STORAGE

TREE PROTECTION (see above)

HAPA ARCHITECTS	
Job Name: New build house @ 8 Fairview Road, Lancing	
Status: PLANNING	Drawing Title: SITE COMPOUND DRAWING
Date: JULY 18	Scale: 1:100 @ A1
Job Ref: 0115	
© All rights reserved - Do not scale off drawing All dimensions to be checked on site	Drawing Number: L-100