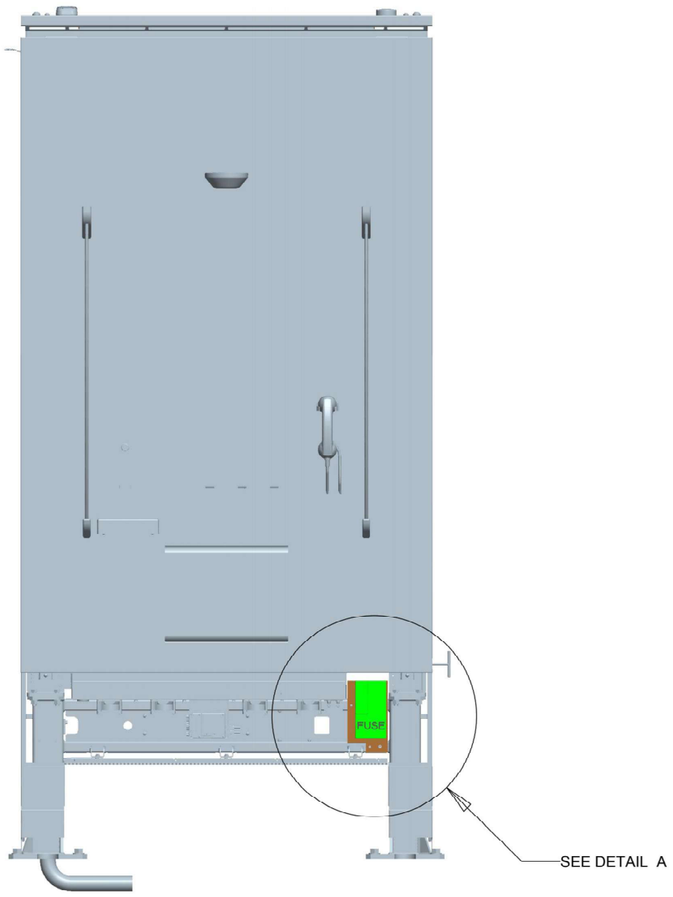

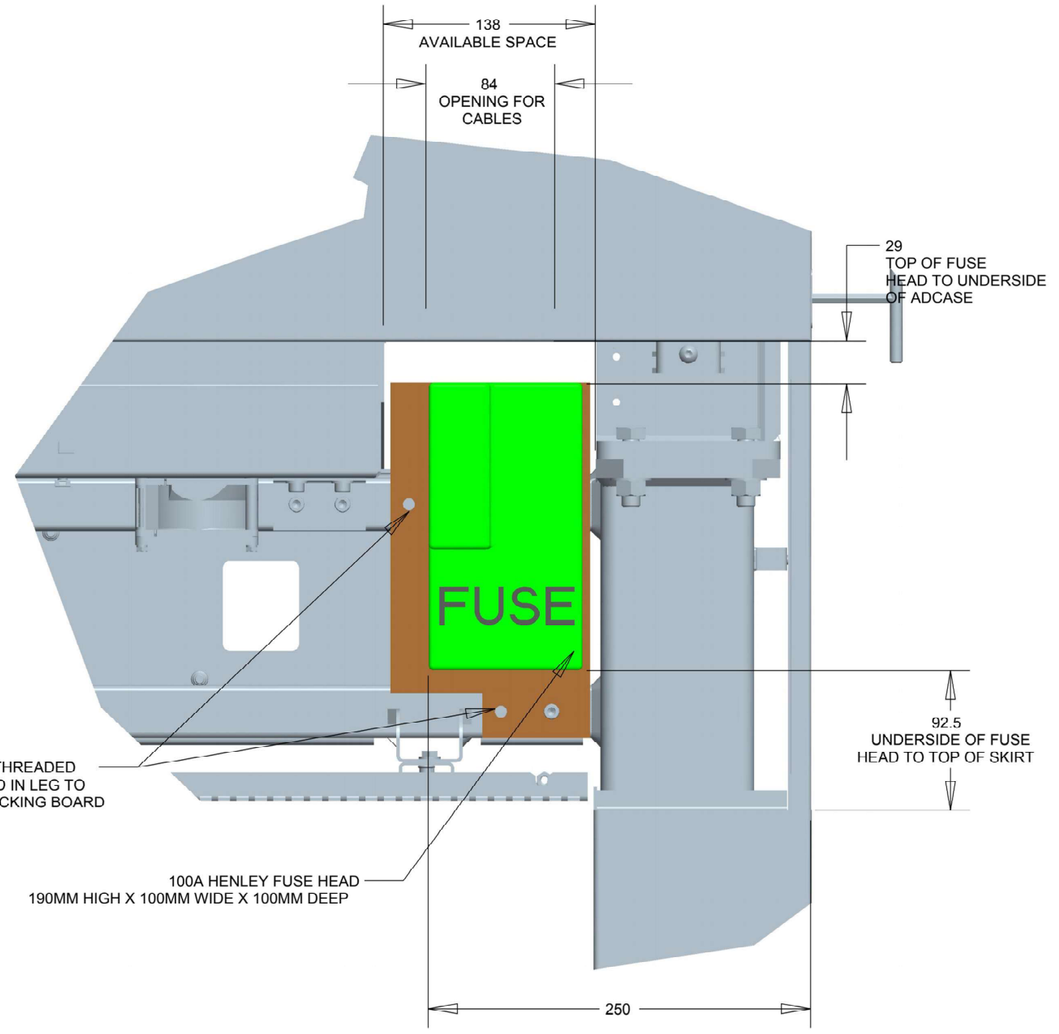

DETAIL A
SCALE 0.250

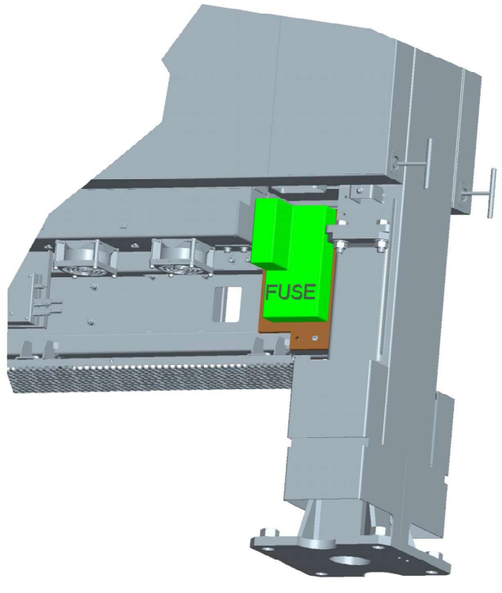

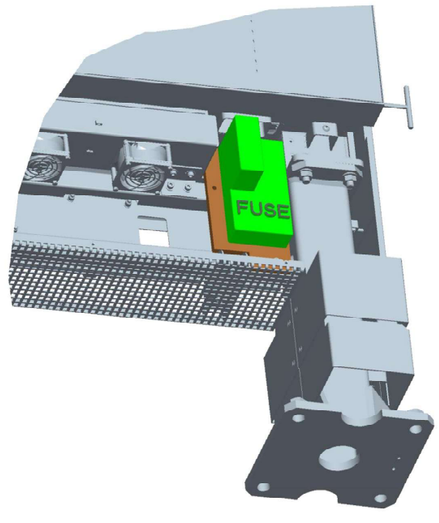

-	DRAWING CREATED	P PASS	25.04.19
MOD	Description	Done By	Date

JCDecaux	Assembly:
	Sub Assembly:
JCDecaux UK Technical Department Metroplex Business Park Broadway, Salford M50 2UW	Part:
	Description: INFOCUS DIGITAL - FUSE HEAD POSITION CHECK
Drawn by: PHIL PASS	Drawing No: TD-1317-0010
Date Drawn: 25.04.19	CAD Ref: / Format: A3
Checked by: -	Weight: 0.000 / Sheet: 1/1
Checked Date: -	Scale: 0.050