ANDREW BORLEY RIBA
10 Castle Gardens, London Road
Arundel
BN18 9AX
tel: 01903 884727
mob: 07876 032 413

client	project	dwg no	rev
Mr A Powell	24 Sedbury Road	A512/D/05	B
drawing	Lancing	date	scale
Section & Elevations		June 2012	1:100@A3

rev.	date.	amendment.	chkd.

dig status.

rev.	date.	amendment.	chkd.

THE CONTRACTOR SHOULD CHECK ALL DIMENSIONS ON SITE. NO DIMENSIONS TO BE SCALED FROM THIS DRAWING.
NO PART OF THIS DRAWING IS TO BE COPIED OR REPRODUCED WITHOUT THE PRIOR CONSENT OF THE ARCHITECT.
IT IS THE CONTRACTORS RESPONSIBILITY TO ENSURE COMPLIANCE WITH THE BUILDING REGULATIONS.
ALL RIGHTS DESCRIBED IN CHAPTER IV OF THE COPYRIGHT, DESIGNS AND PATENTS ACT 1988 HAVE GENERALLY BEEN ASSERTED.

24 Sedbury Road, Lancing - Proposed Elevations

North Elevation

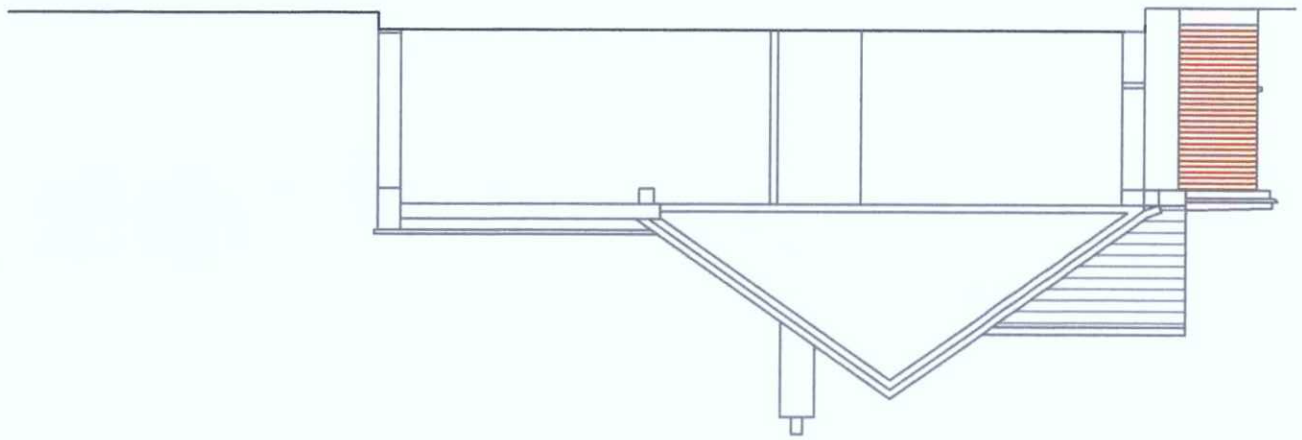

South Elevation

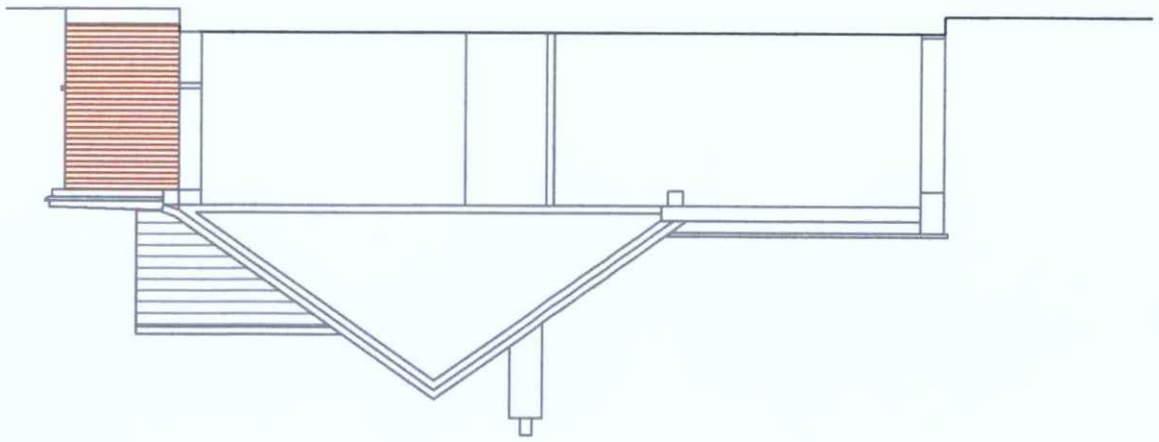

West Elevation



