EXISTING WINDOW LAYOUT
SINGLE GLAZED WINDOWS

Window G

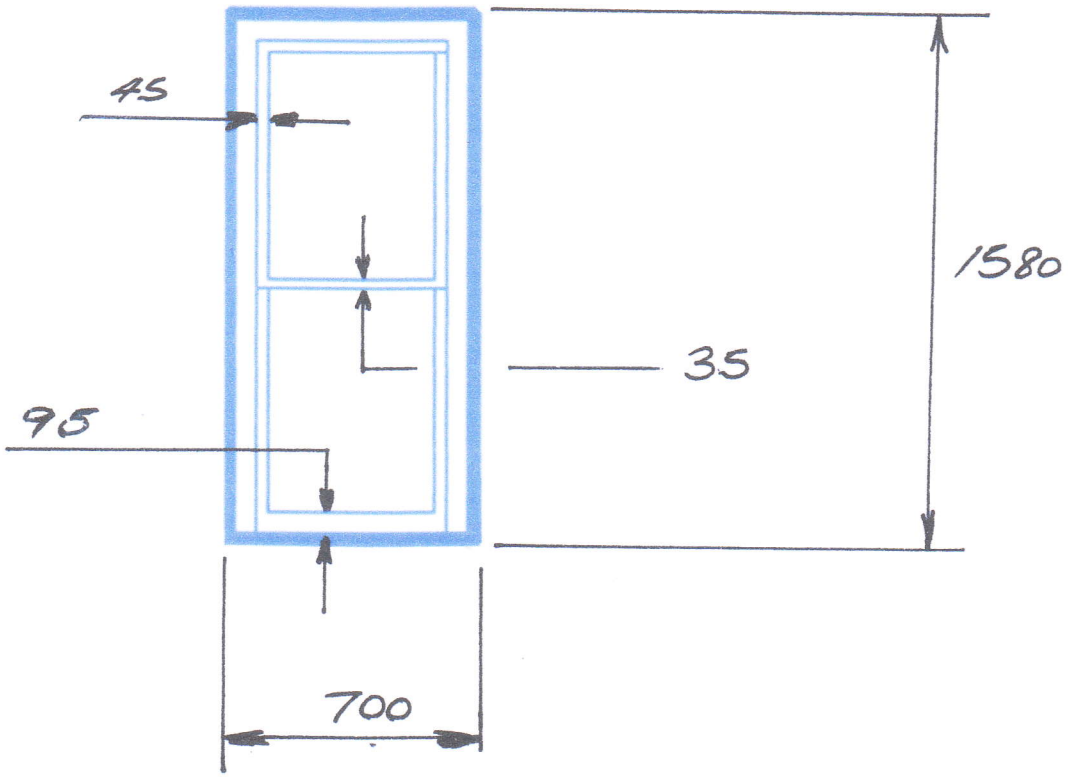



33 EAST STREET SHOREHAM BY SEA MR R OGDEN

PROPOSED WINDOW LAYOUT
DOUBLE GLAZED WINDOWS
12 MM SLIMLINE UNITS

Window G

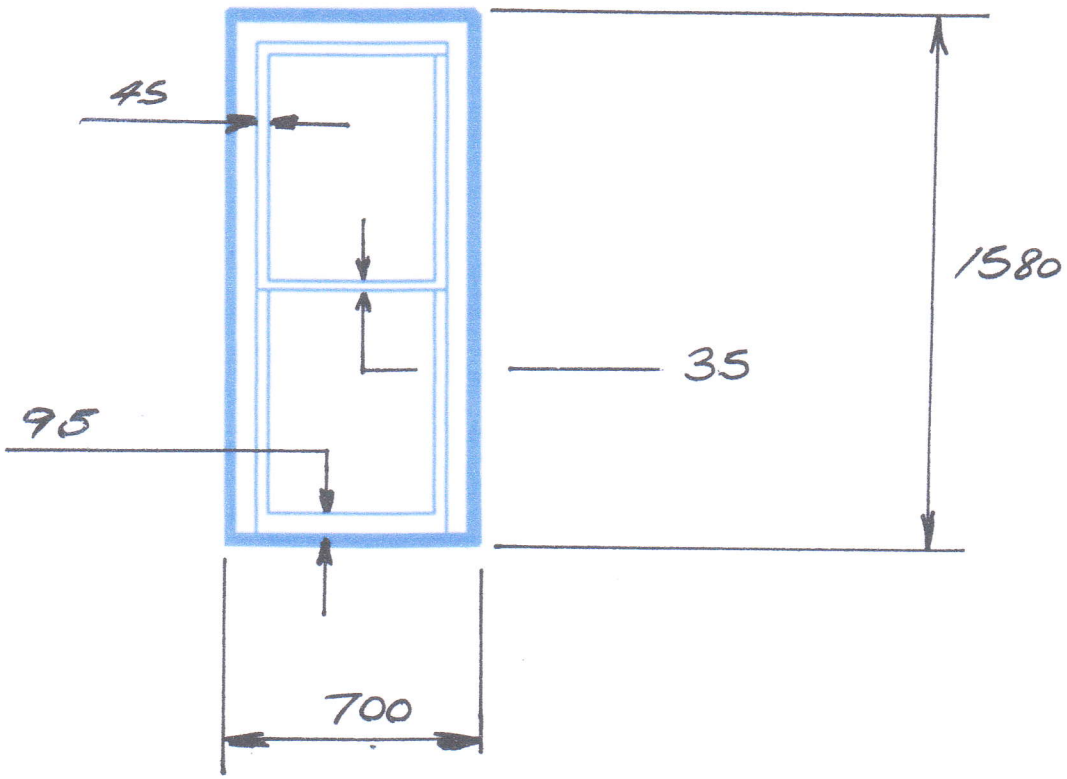



33 EAST STREET SHOREHAM BY SEA MR R OGDEN

EXISTING WINDOW LAYOUT
SINGLE GLAZED WINDOWS

Window F

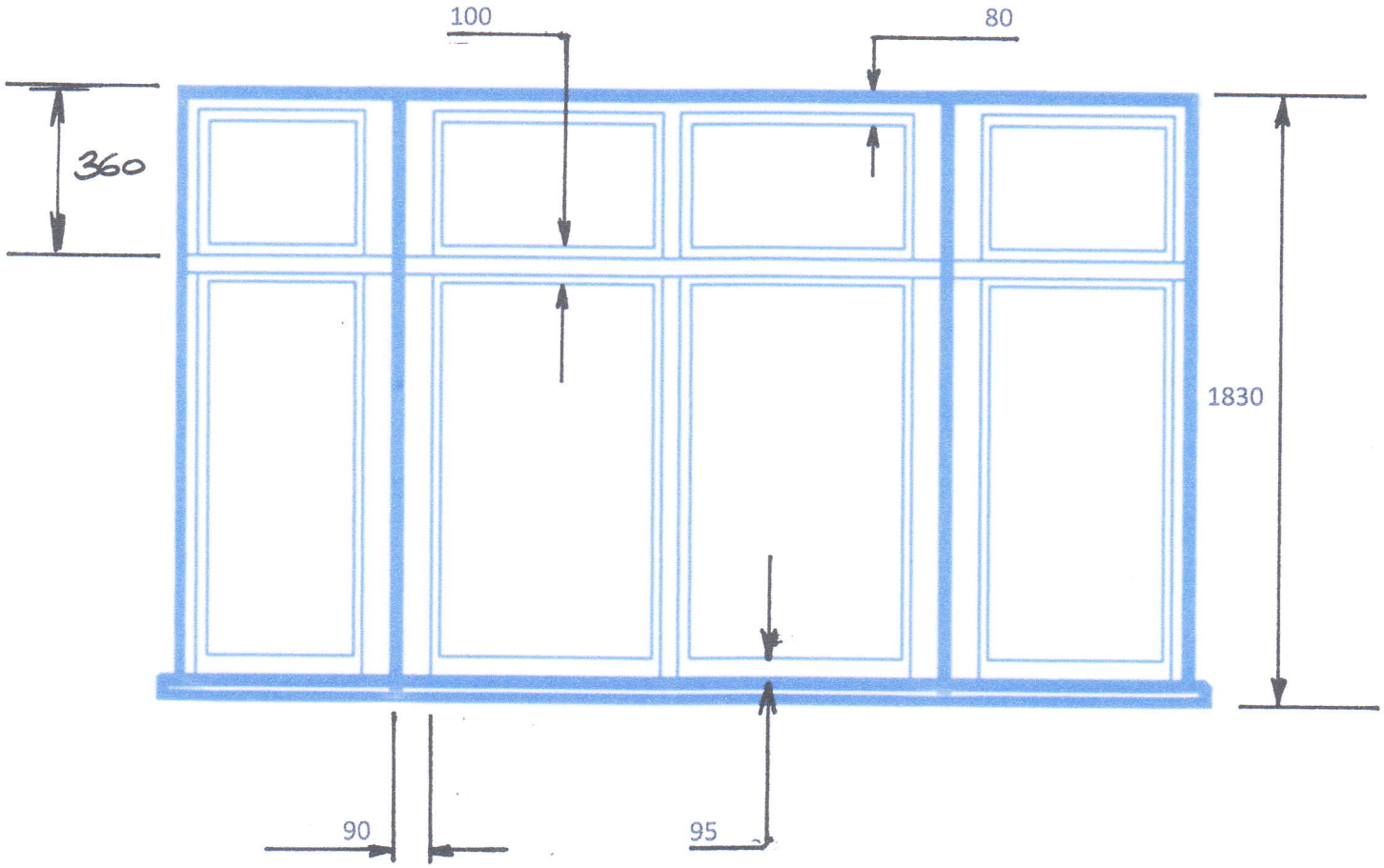

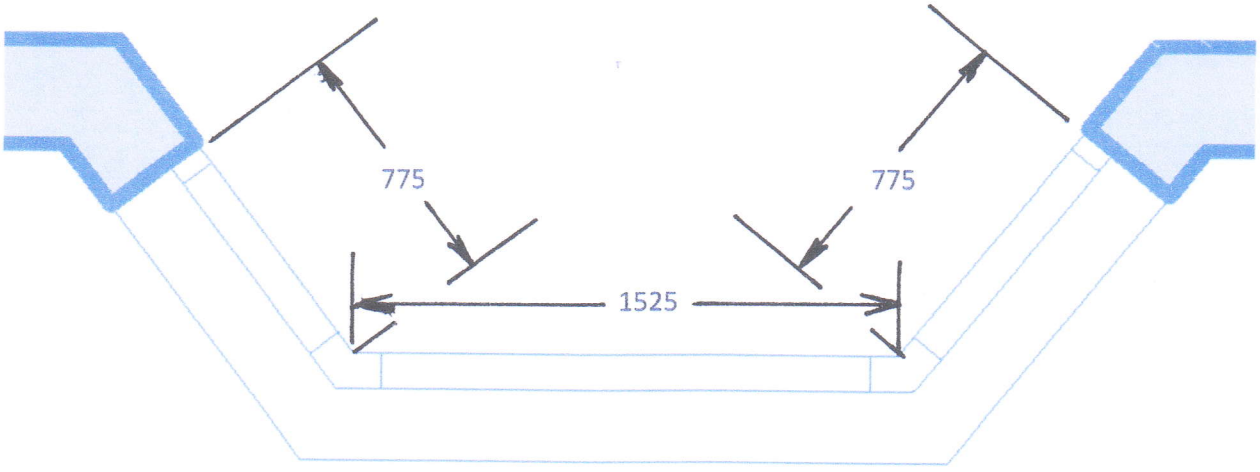

33 EAST STREET SHOREHAM BY SEA MR R OGDEN

PROPOSED WINDOW LAYOUT
DOUBLE GLAZED WINDOWS
12 MM SLIMLINE UNITS

Window F

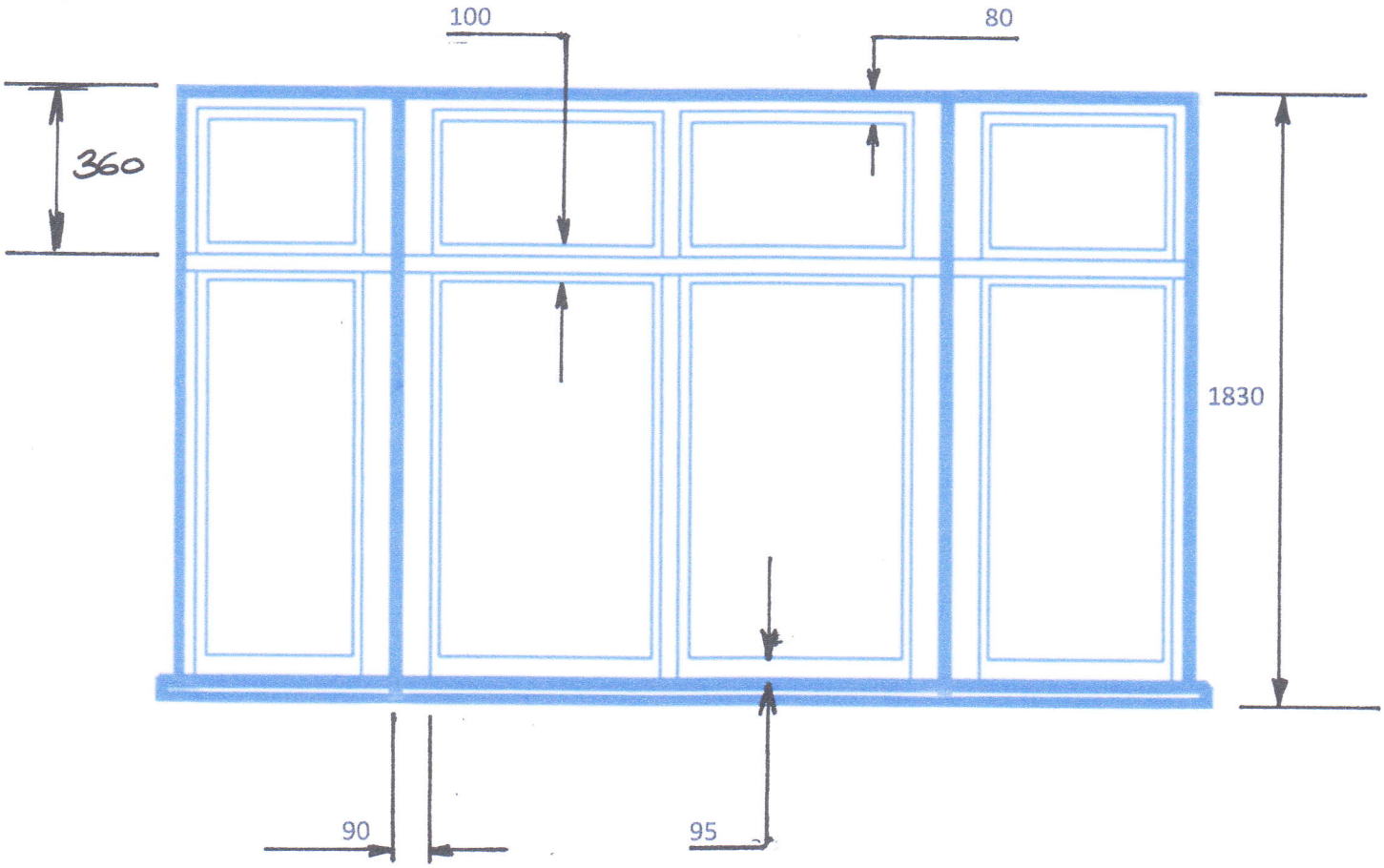

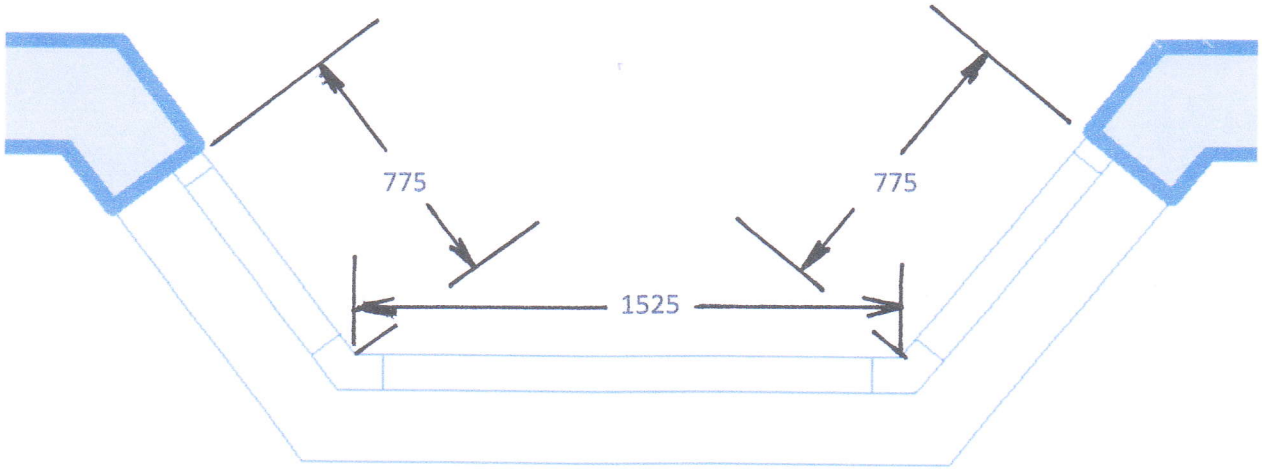

33 EAST STREET SHOREHAM BY SEA MR R OGDEN

TYPICAL DETAIL 'A'

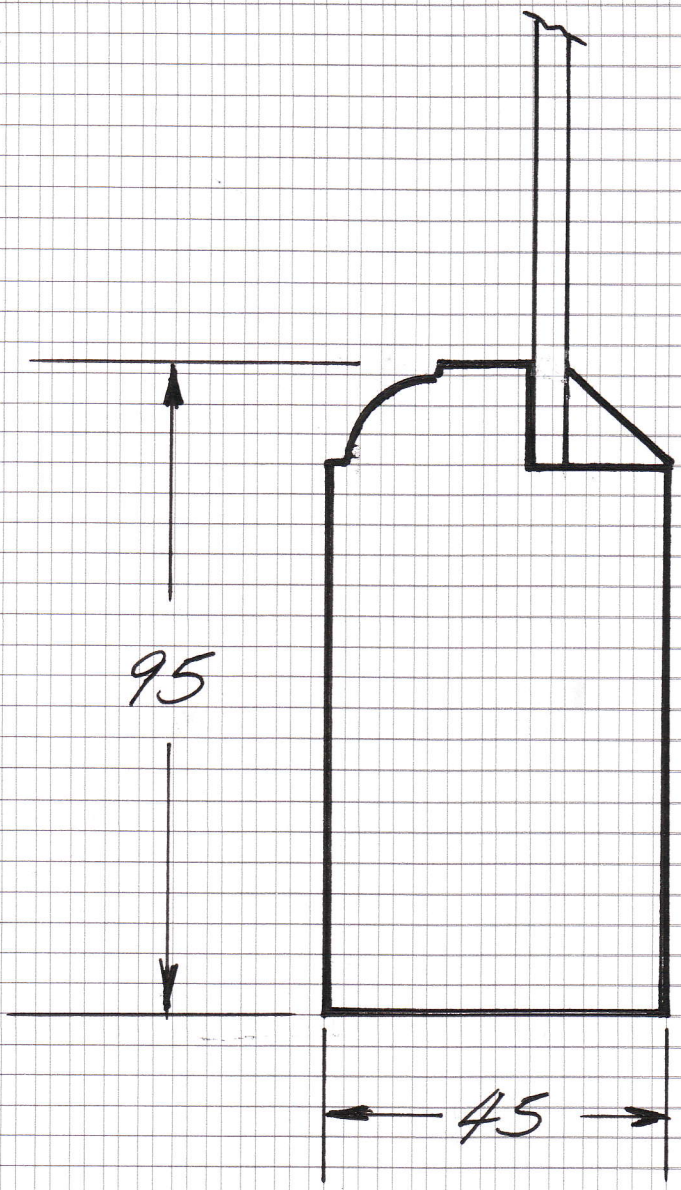

EXISTING CASEMENT TYPICAL SECTION OF BASERAIL

33 EAST STREET SHOREHAM BY SEA MR R OGDEN

TYPICAL DETAIL 'B'

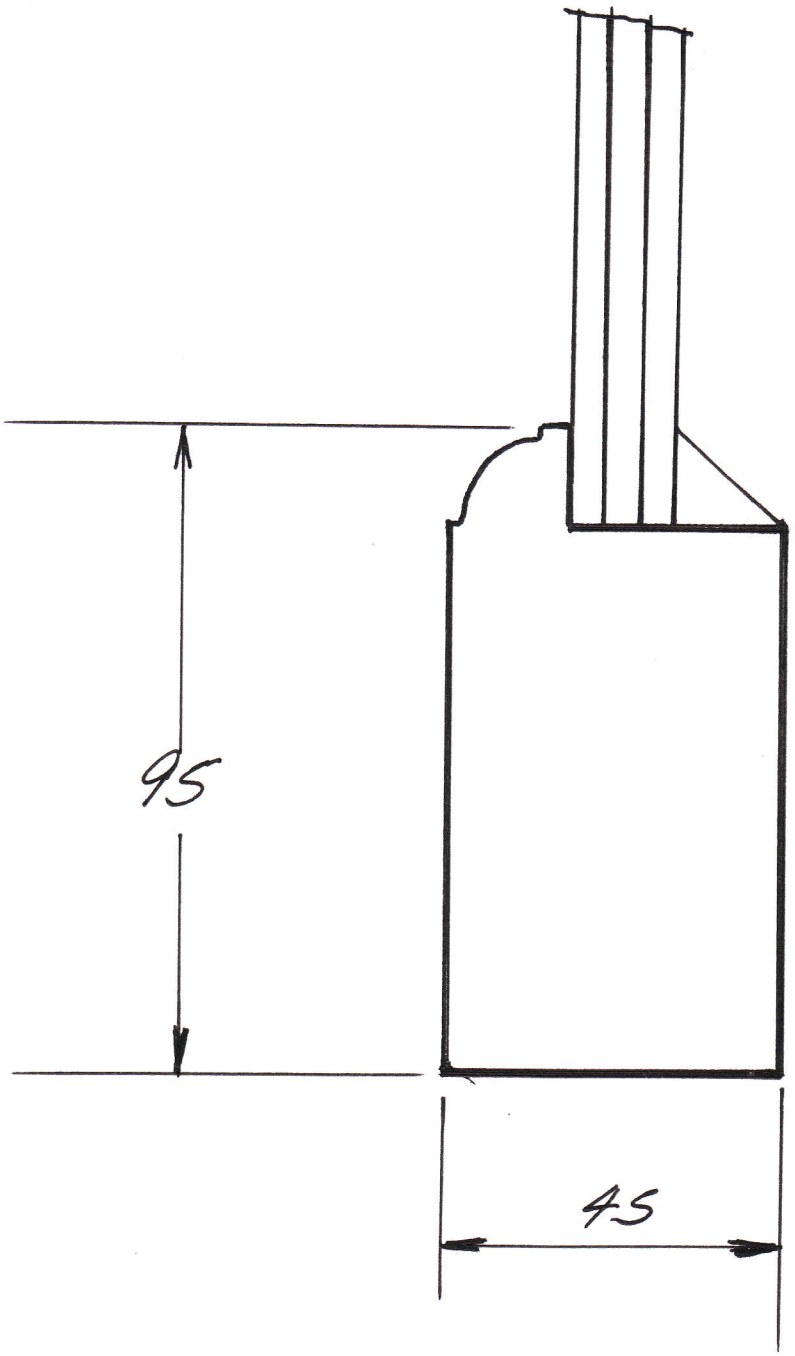

12 MM DOUBLE GLAZED
WINDOW IN PUTTY

4-4-4 MM MAKE UP
SLIMLINE UNITS

PROPOSED REPLACEMENT CASEMENT TYPICAL SECTION OF BASERAIL

33 EAST STREET SHOREHAM BY SEA MR R OGDEN

TYPICAL DETAIL 'C'

EXISTING SINGLE GLAZED

PROPOSED DOUBLE GLAZED 12mm UNITS SLIMLINE

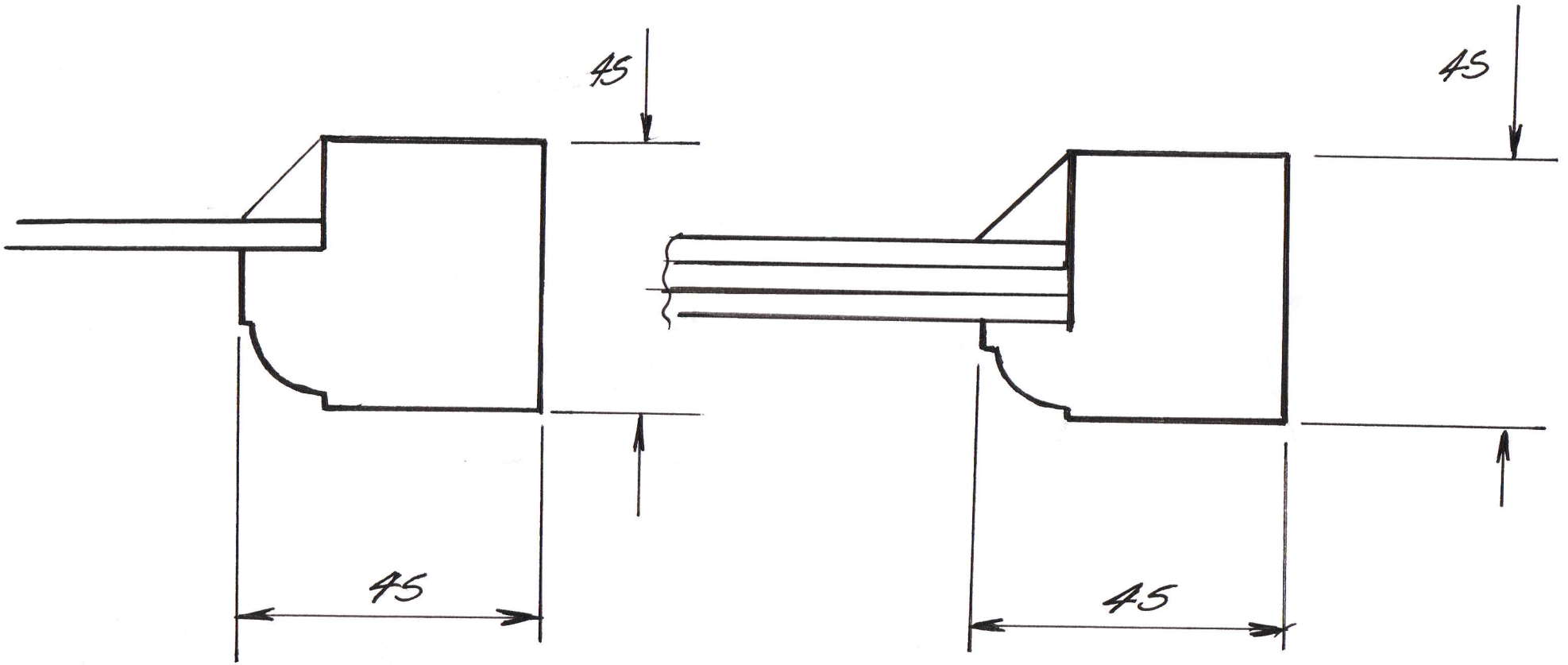

TYPICAL SIDE + TOP RAIL DETAIL

33 EAST STREET SHOREHAM BY SEA MR R OGDEN