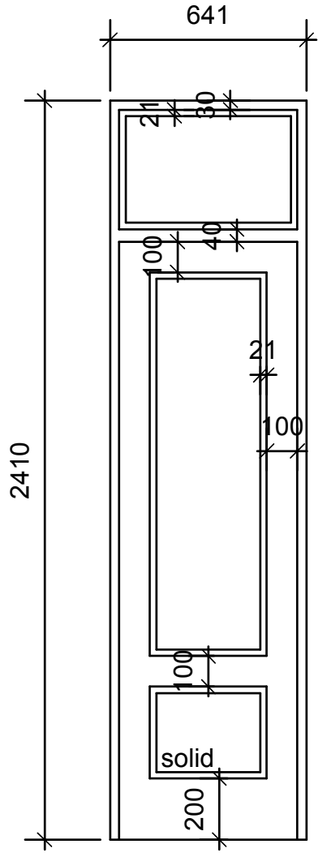

FIRST FLOOR DOOR

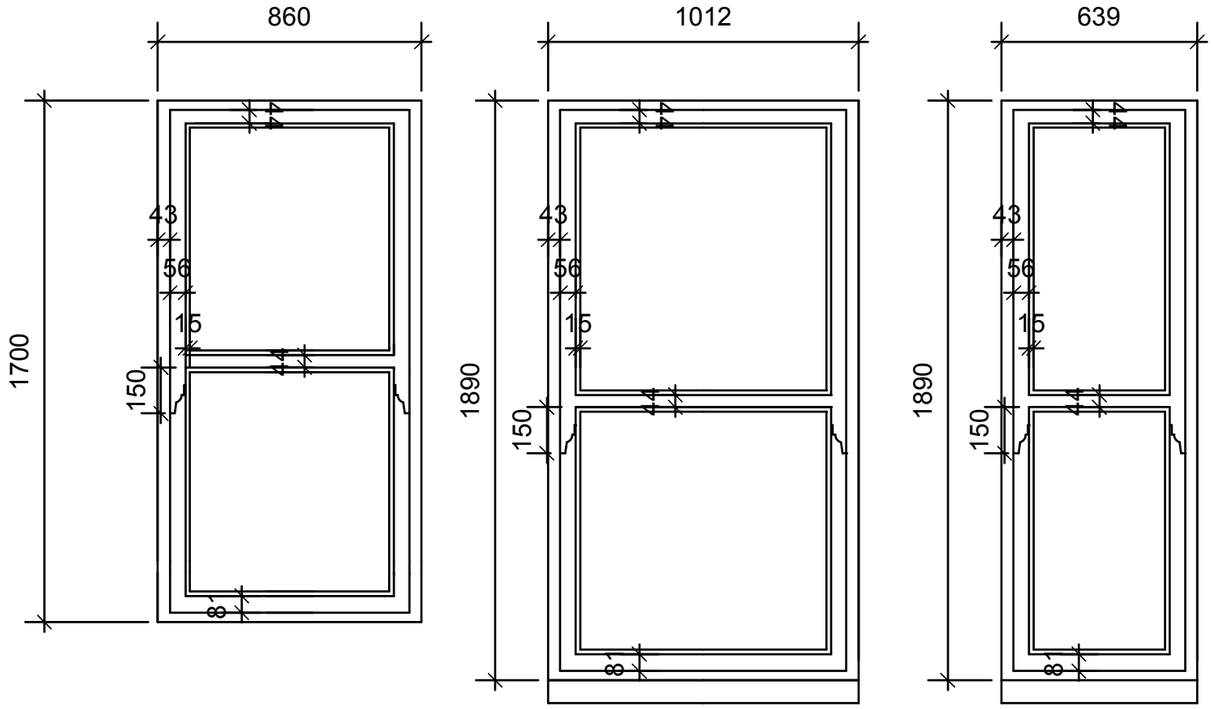

FIRST FLOOR WINDOWS

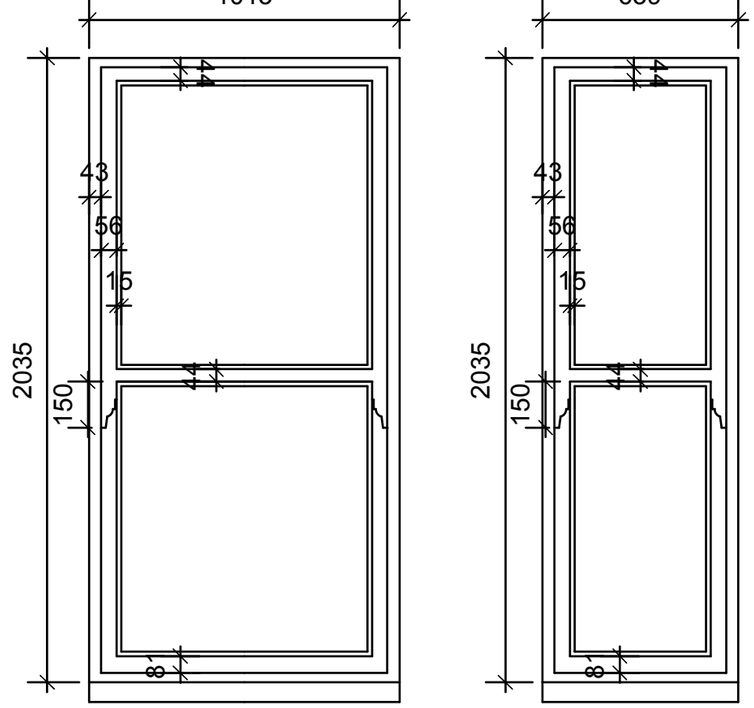

GROUND FLOOR WINDOWS

0 500 1000mm

SCALE 1:20

notes :

amendments :

Felce & Guy Partnership LLP
Architects
Studio 5 | English Close | Hove | BN3 7ET
T: 01273 736217 E: info@felceandguy.co.uk

project : WINDOW REPLACEMENT TO FRONT ELEVATION

location : 110 MARINE PARADE WORTHING

client : MRS G. WALPOLE

drawing : PROPOSED ELEVATIONS

scale : 1:20 | page : A3

drawn by : SM | checked by :

date: Feb. 2025 | drawing number: 2835 - 06 | revision: A

© Felce & Guy Partnership LLP