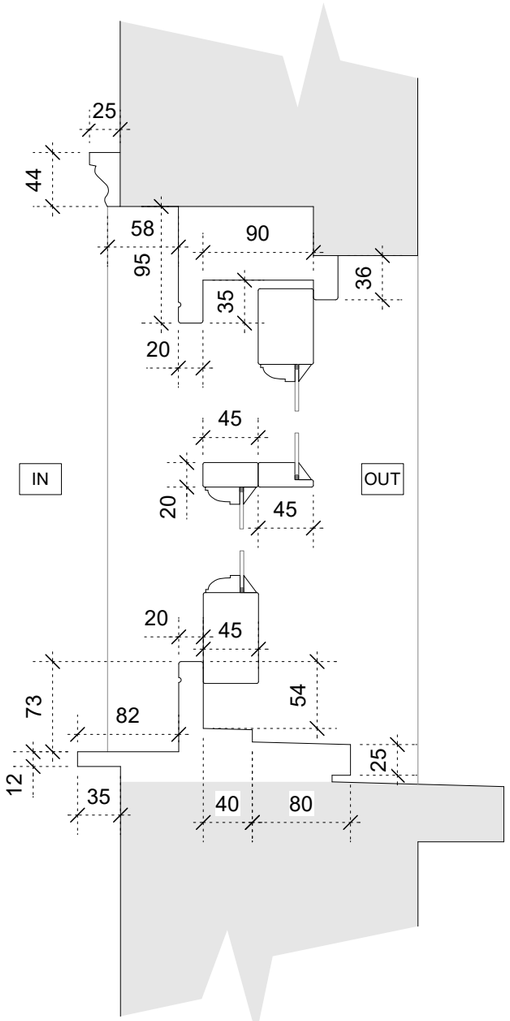


WINDOW TYPE - EW02C
TIMBER SASH WITH MULLIONS
PUTTY EXTERNALLY
VERTICAL SECTION
1:5 @ A3

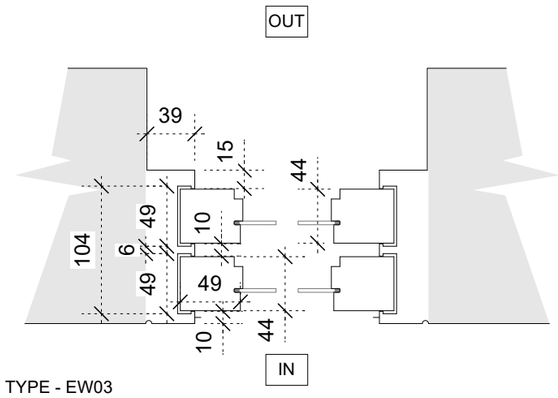


WINDOW TYPE - EW03
TIMBER SASH WITH uPVC
DETAILING IN JAMBS
HORIZONTAL SECTION
1:5 @ A3

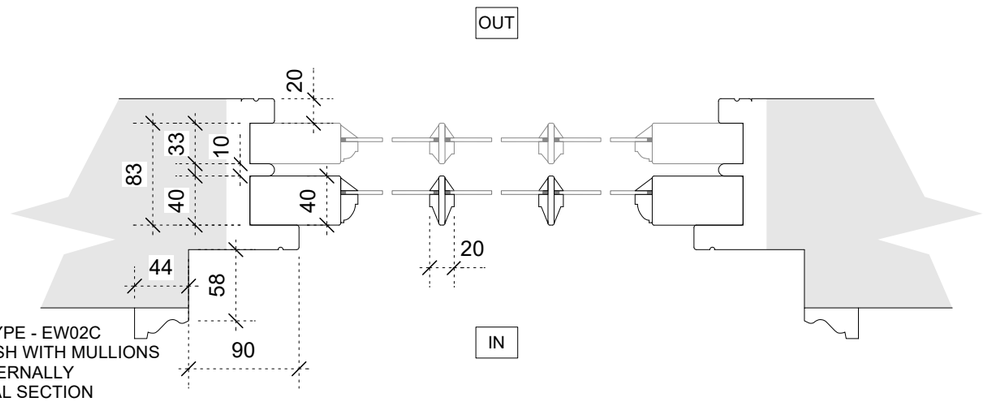


WINDOW TYPE - EW02C
TIMBER SASH WITH MULLIONS
PUTTY EXTERNALLY
HORIZONTAL SECTION
1:5 @ A3

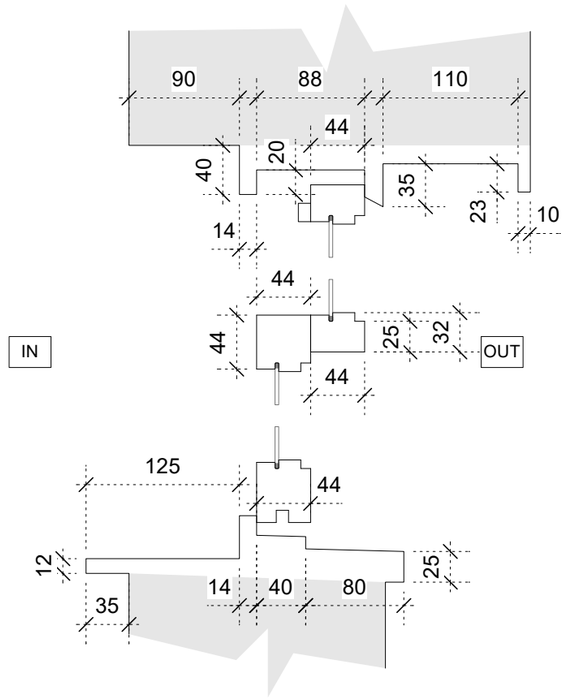


WINDOW TYPE - EW03
TIMBER SASH WITH uPVC
DETAILING IN JAMBS
VERTICAL SECTION
1:5 @ A3

23 Vine Street, Brighton BN1 4AG
e: studio@sticklandwright.co.uk
t: 01273 964051
Company registered in England No. 11222477

**Disclaimer:**

This drawing is the copyright of Stickland Wright Ltd. and may not be reproduced or used except by written permission.
Figured dimensions to have precedence over scaling. Check all site dimensions prior to fabrication. Refer any discrepancies found to Stickland Wright.

**Revisions:**

**Checked**

SCALE BAR 1:5 @ A3

1:5 | 0.1m | 0.2 | 0.3

| | |
|---|---|
| **Dwg No.** | 23049-P-118 |
| Drawing Title | Existing Window Details 03 |
| Address | 50-52 South St, Worthing |
| Client | DIM 365 Ltd |
| Scale | 1:5 @ A3 |
| Stage | Planning |
| Drawn by | sb |
| Checked by | ns |

STICKLAND WRIGHT
architecture + interiors
www.sticklandwright.co.uk