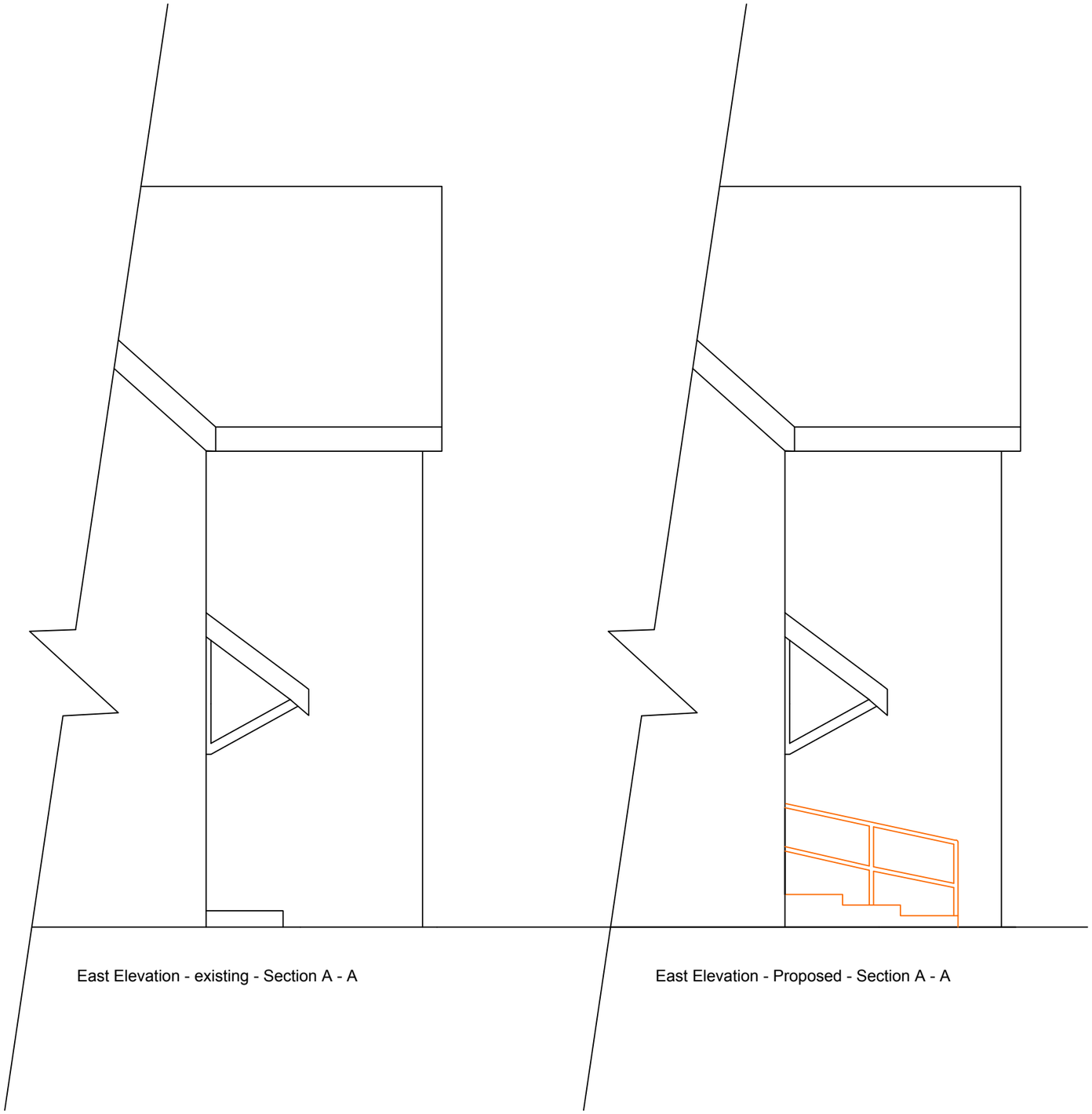

East Elevation - existing - Section A - A

East Elevation - Proposed - Section A - A

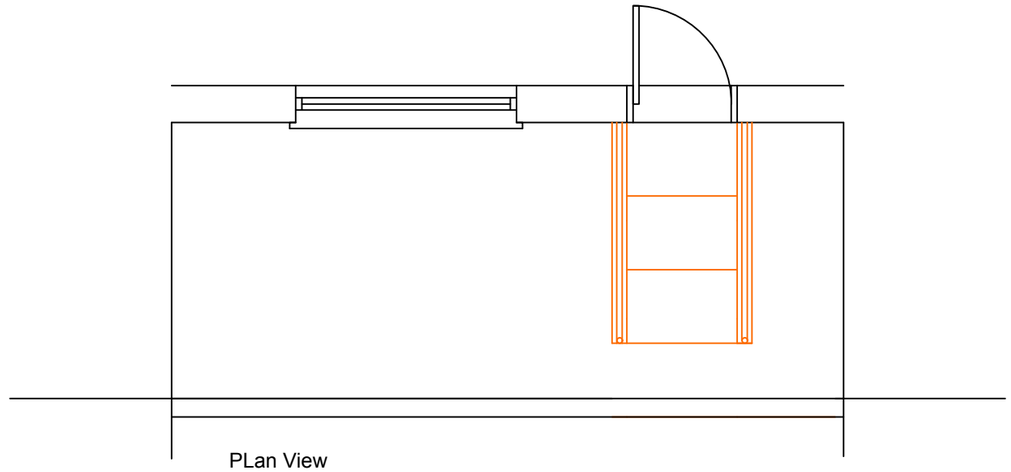

PLan View

0 50 100

Ms Ann Fisk
23 Addison Close
Lancing
BN15 9TD

East Elevations & Plan view

Scale: 1:50
Date: Sep 2019
Drawn: Mike Peckham

023/ADD

/04

ADUR & WORTHING HOME IMPROVEMENT ASSISTANCE
ADUR & WORTHING COUNCILS
PORTLAND HOUSE
RICHMOND ROAD
WORTHING
BN11 1HS