Mr & Mrs Ian & Carol Ohara
Flat 1 37 Winchester Road
Worthing
West Sussex
BN11 4DH

Valley WINDOWS

Design Proposal

Valley Windows
Registered Offices at, 254 Upper Shoreham,
Shoreham-by-Sea,
BN43 6BF.
Tel : 01903 830615
Email : wayne@valleywindows.net
Web: www.valleywindows.net

Featured Vertical slider - Lounge — Qty 1

Viewed from Outside

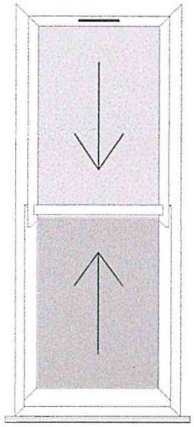

Vstop/Vsbottom

Viewed from Inside

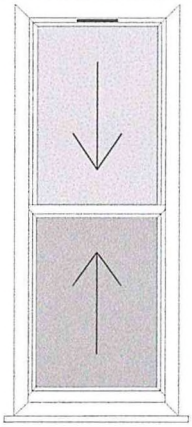

Glass/Panel/Composite Options:

Clear 4:20:4 Low E (A+ Rated)
Clear 4:20:4 Tough Low E (A+ Rated)

Frame Options:

Frame colour:	White
Cill:	147mm integrated cill
Cill colour:	White
Bottom Rail:	Deep
Sash Horns:	Run through
Limit stops:	Required
D Handles:	Not required
Furniture finish colour:	White
Hook lifts:	Contemporary
Sash rings:	Contemporary
Tilt Restrictor:	Tilt restrictors on both sashes
Outer Frame Joint:	Welded
Sash Joint:	Welded
Transom/Mullion Joint:	Welded

Fitting Options:

Windowboard:	Use existing windowboard
Fitting:	Replace existing window
Building works:	Not required
New lintel:	Not required
Tickle Vent:	4000mm Trickle vent

Item Notes:
UPVC VIRTICAL SLIDING WINDOWS

Item 1 of 3

Valley Windows
Registered Offices at, 254 Upper Shoreham,
Shoreham-by-Sea,
BN43 6BF.
Tel : 01903 830615
Email : wayne@valleywindows.net
Web: www.valleywindows.net

Featured Vertical slider - Lounge — Qty 1

Viewed from Outside

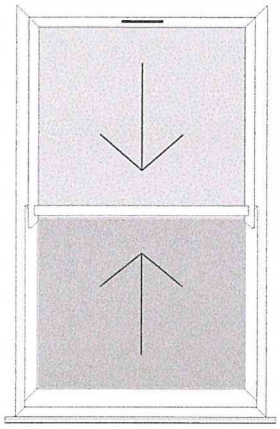

Vstop/Vsbottom

Viewed from Inside

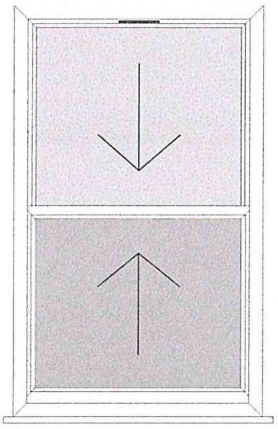

Glass/Panel/Composite Options:

Clear 4:20:4 Low E (A+ Rated)
Clear 4:20:4 Tough Low E (A+ Rated)

Frame Options:

Frame colour:	White
Cill:	147mm integrated cill
Cill colour:	White
Bottom Rail:	Deep
Sash Horns:	Run through
Limit stops:	Required
D Handles:	Not required
Furniture finish colour:	White
Hook lifts:	Contemporary
Sash rings:	Contemporary
Tilt Restrictor:	Tilt restrictors on both sashes
Outer Frame Joint:	Welded
Sash Joint:	Welded
Transom/Mullion Joint:	Welded

Fitting Options:

Windowboard:	Use existing windowboard
Fitting:	Replace existing window
Building works:	Not required
New lintel:	Not required
Tickle Vent:	4000mm Trickle vent

Item 2 of 3

Valley Windows
Registered Offices at, 254 Upper Shoreham,
Shoreham-by-Sea,
BN43 6BF.
Tel : 01903 830615
Email : wayne@valleywindows.net
Web: www.valleywindows.net

Featured Vertical slider - Lounge — Qty 1

Viewed from Outside

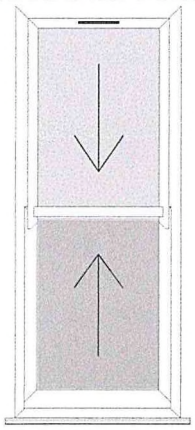

Vstop/Vsbottom

Viewed from Inside

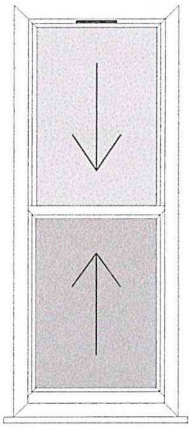

Glass/Panel/Composite Options:

Clear 4:20:4 Low E (A+ Rated)
Clear 4:20:4 Tough Low E (A+ Rated)

Frame Options:

Frame colour:	White
Cill:	147mm integrated cill
Cill colour:	White
Bottom Rail:	Deep
Sash Horns:	Run through
Limit stops:	Required
D Handles:	Not required
Furniture finish colour:	White
Hook lifts:	Contemporary
Sash rings:	Contemporary
Tilt Restrictor:	Tilt restrictors on both sashes
Outer Frame Joint:	Welded
Sash Joint:	Welded
Transom/Mullion Joint:	Welded

Fitting Options:

Windowboard:	Use existing windowboard
Fitting:	Replace existing window
Building works:	Not required
New lintel:	Not required
Tickle Vent:	4000mm Trickle vent

Item Notes:
UPVC VIRTICAL SLIDING WINDOWS

Item 3 of 3

Valley Windows
Registered Offices at, 254 Upper Shoreham,
Shoreham-by-Sea,
BN43 6BF.
Tel : 01903 830615
Email : wayne@valleywindows.net
Web: www.valleywindows.net

Item Extras and Totals Page

Cost of fitted items (including vat) :	£	5064.00
Total (including vat):	£	5064.00
Deposit payable:	£	1266.00
Balance to be paid upon completion:	**£**	**3798.00**

The vertical sliding windows will be from spectus legacy,
Trickle vents will be in the top sashes,
They will be glazed with A+rated glass,
Toughened safety glass where needed,
The overall u value is 1.40,
Both window frames and glass will have a 10 year guarantee,
All works are fully guaranteed,
To follow will be the technical information for the windows.

Technical Information

Our technical information section covers manufacturing limitations and detailed technical drawings. To most people the technical drawings don't make much sense, so if you have any questions our product experts will be more than happy to explain in more detail.

TECHNICAL SPECIFICATIONS

Front-to-back Dimensions:	128mm
Sill Options:	150mm / 210mm
Glazed Unit:	24mm Double Glazed
U-Value:	1.4W/m²K
Air Tightness:	Class 3
Water Tightness:	5A
Wind Load:	Class 3A

MANUFACTURING LIMITATIONS

Minimum Width:	375mm
Minimum Height:	800mm
Maximum Width:	1500mm
Maximum Height:	2400mm

KEY PROFILE SECTIONS

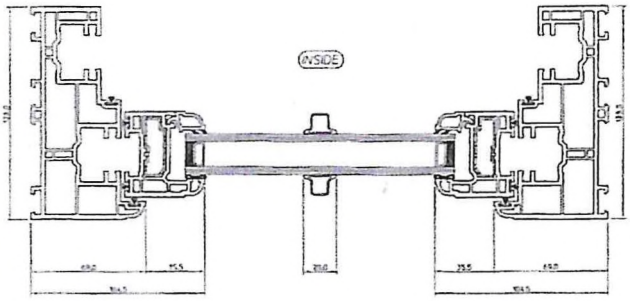

Bottom Sash Downwards View

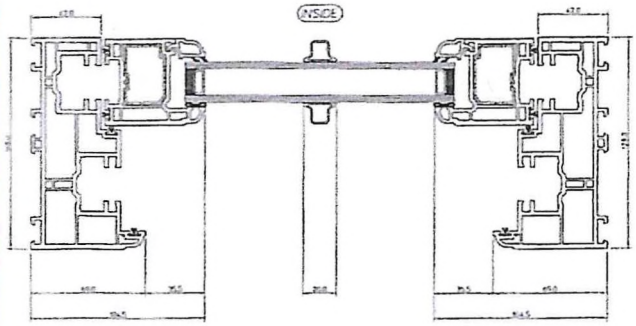

Top Sash Downwards View

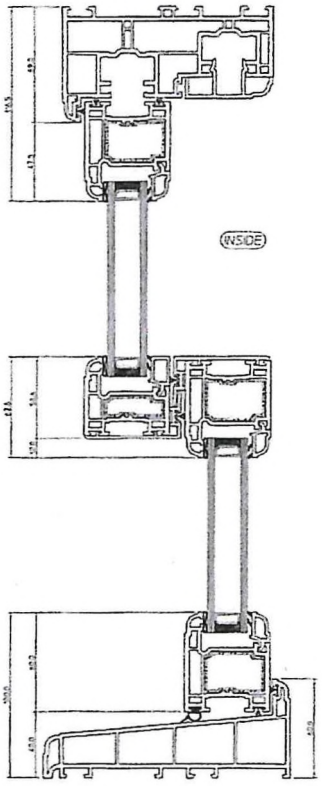

Sideways View - Standard Bottom Rail

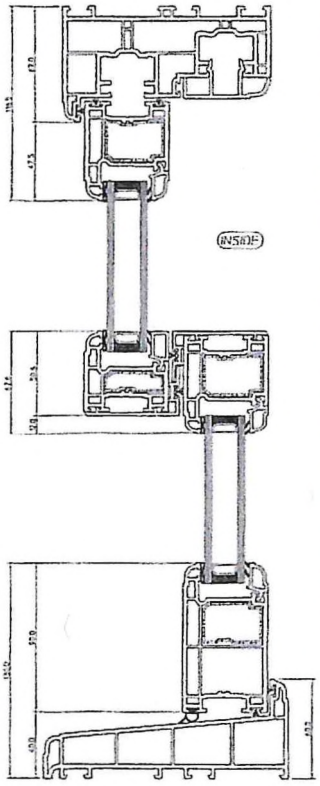

Sideways View - Deep Bottom Rail

The images, drawings and data shown in this brochure are for illustrative purposes only and are not binding in detail, colour, or specification. We reserve the right to make changes to the product specification as technical developments dictate and without prior notice.