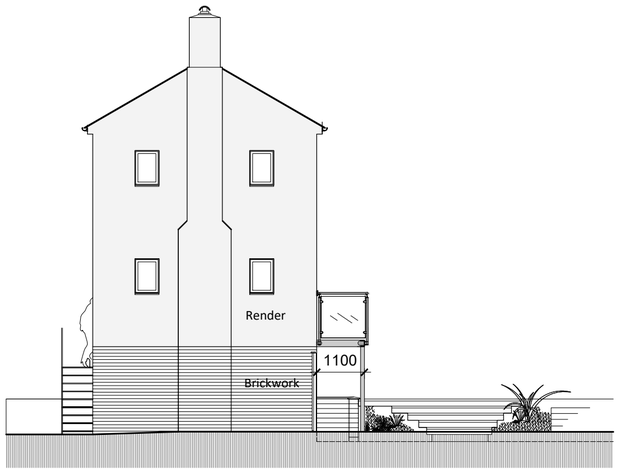

SOUTH ELEVATION
As proposed
Scale 1:100

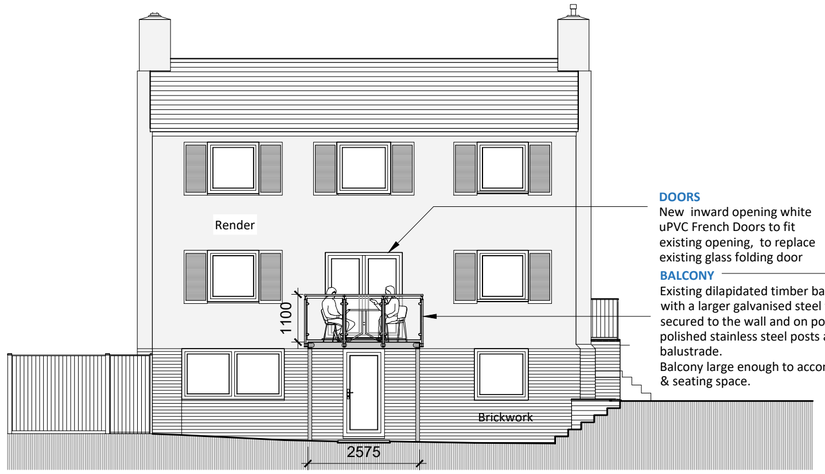

DOORS
New inward opening white uPVC French Doors to fit existing opening, to replace existing glass folding door

BALCONY
Existing dilapidated timber balcony to be replaced with a larger galvanised steel framed balcony, secured to the wall and on posts, with a glass and polished stainless steel posts and handrail balustrade.
Balcony large enough to accommodate small table & seating space.

EAST ELEVATION
As proposed
Scale 1:100

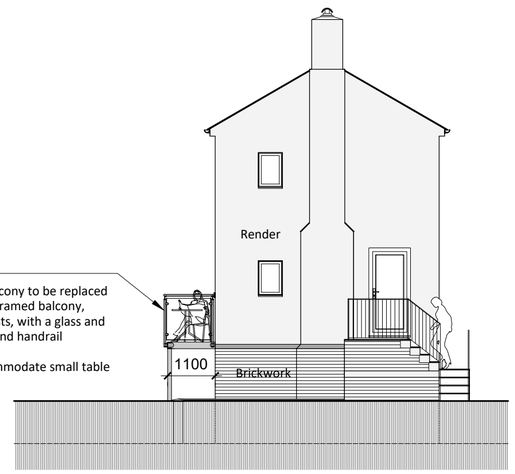

NORTH ELEVATION
As proposed
Scale 1:100

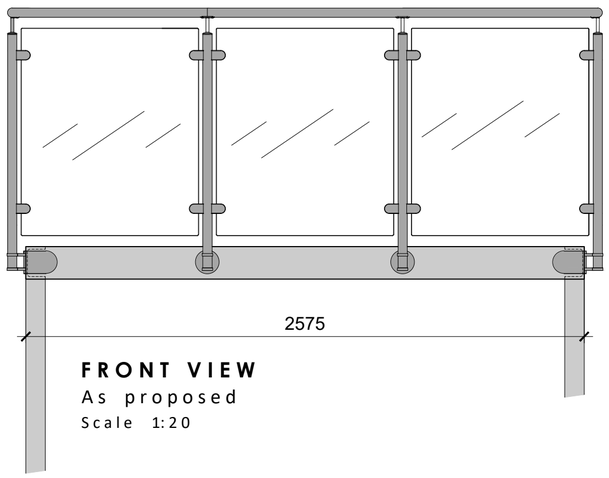

FRONT VIEW
As proposed
Scale 1:20

0 500mm 1.5m 2.5m
Scale 1:20

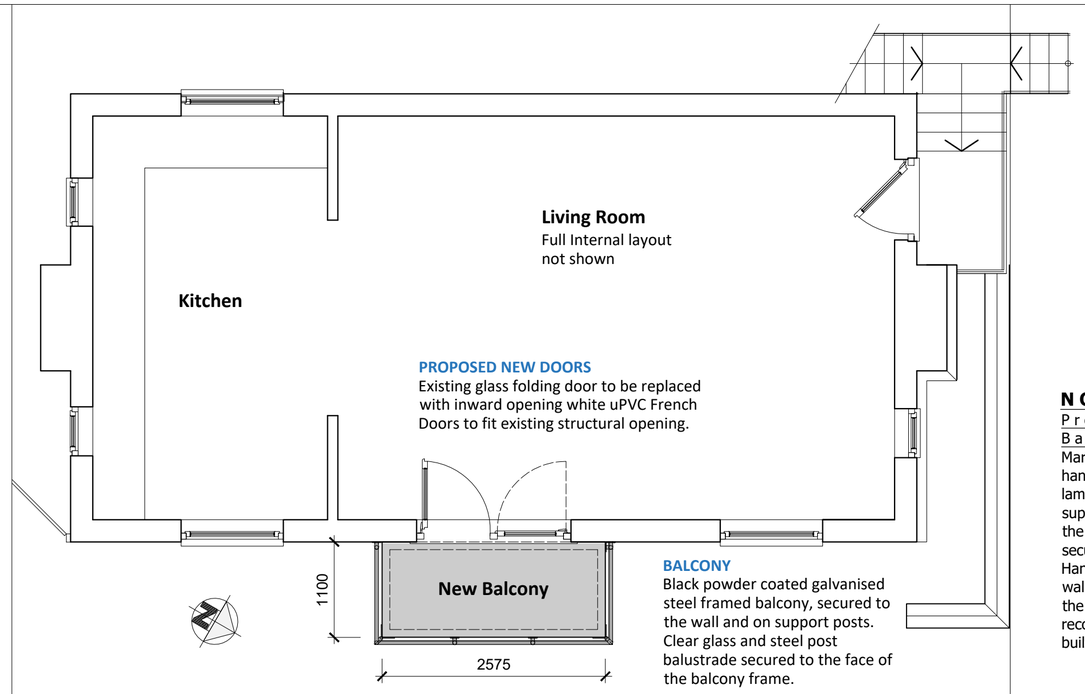

FIRST FLOOR OUTLINE PLAN
As proposed
Scale 1:50

0 0.5 1m 1.5 2 3 4 5 10

NOTE
Proposed Balustrades
Marine grade 316 polished stainless steel handrails and posts, with clear toughened laminated glass panels between the posts supported by glass clamps attached to the posts. Posts fitted with plates and secured to the face of the balcony. Handrails secured to the posts and to the walls at the ends. All in accordance with the manufacturer's specification and recommendations and in compliance with building regulation requirements.

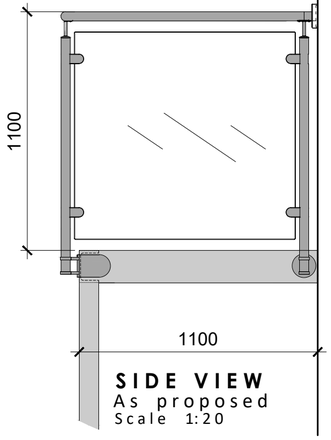

SIDE VIEW
As proposed
Scale 1:20

PROPOSED

Notes		Rev		HOUSEHOLDER PLANNING APPLICATION	16.02.2024 Issued to Planning	Drawing Title: Outline Floor Plans & Elevations, As proposed	Client: Odaline Martinez	stuart radley associates, Chartered Building Surveyors
• All dimensions to be verified on site prior to any shop or site works being commenced. • Any discrepancies to be reported to the Surveyor before any work is put in hand. • ~~Do not scale from this drawing.~~ • This drawing is to be read in conjunction with all relevant consultants and specialists drawings and details.					Status	Scale: As shown; Paper size: A2; Drawn by: MCH; Date: Jan 2024; Drawing No.: B177PC/DS/04; Rev.	Job Title: 2 Beach Green, Shoreham — Replacement of existing balcony with larger balcony and new balustrade. New French doors leading onto the balcony.	Unit 5 Tungsten Building, George Street, Portslade, Brighton BN41 1RA RICS Tel. 01273 420606 Fax. 01273 420707 e-mail. info@stuartradleyassociates.co.uk