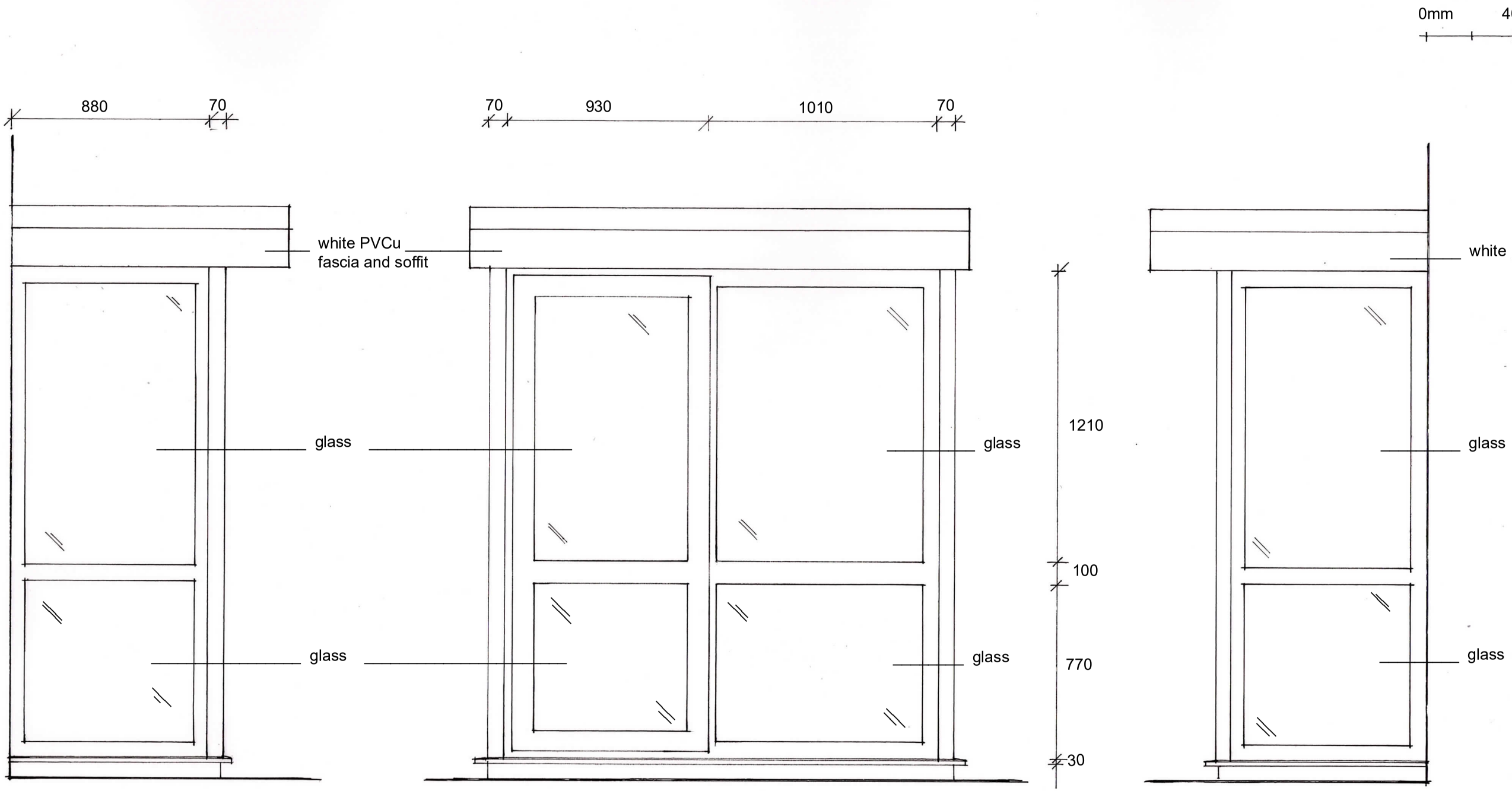

Side Elevation

Front Elevation

Side Elevation

Proposed White Powder Coated Aluminium Glazed Doors and Frames to the 6 No. Common Parts Porches of Flats 1-36 Sheldon Court, Bath Road, Worthing

Sussex Building Surveyors Ltd

01903 529583
adk@sussexbuildingsurveyors.com

Sheldon Court,
Bath Road,
Worthing.
BN11 3PB

Replacement Common Parts Porches
Proposed Porches

Scale: 1:20
Paper: A3
Date: March 2024
Drg No.: SBS/453/09A

Do not scale except for planning purposes.
All dimensions to be checked on site.