Sign Type L2 - Construction details

Individual built up letters - size and colour site specific

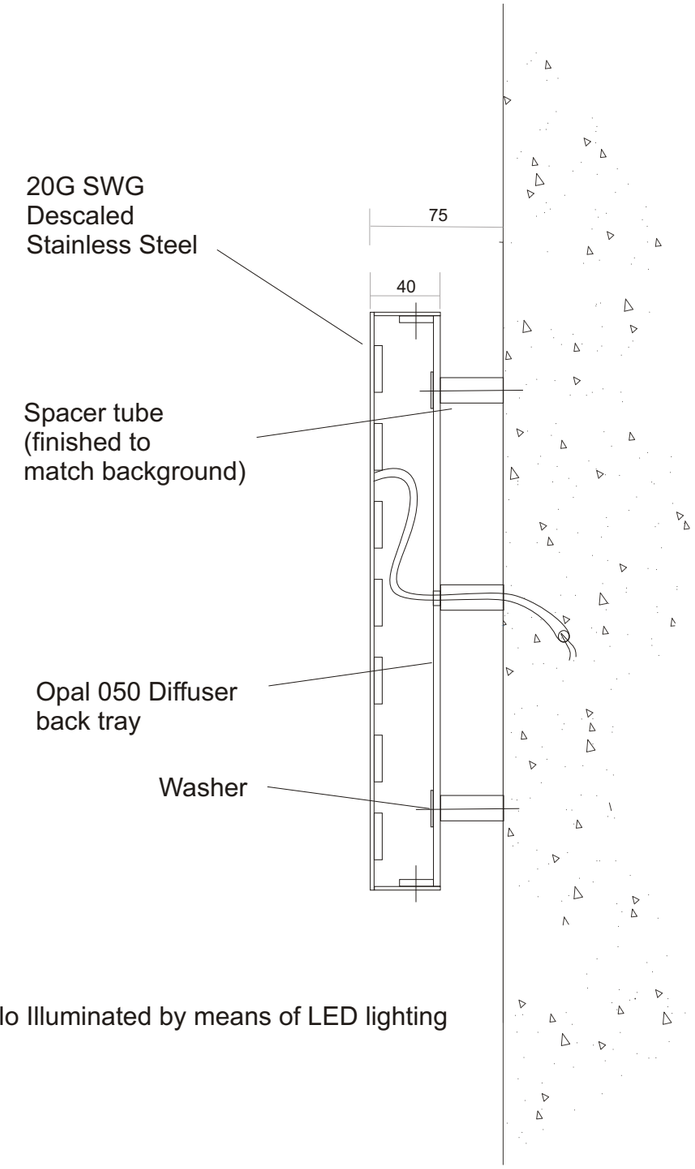

Letters Halo Illuminated by means of LED lighting

©Copyright 2009 Insignia Projects Limited. This document is not to be copied, adapted or distributed without prior written consent from Insignia Projects Limited